Closet System

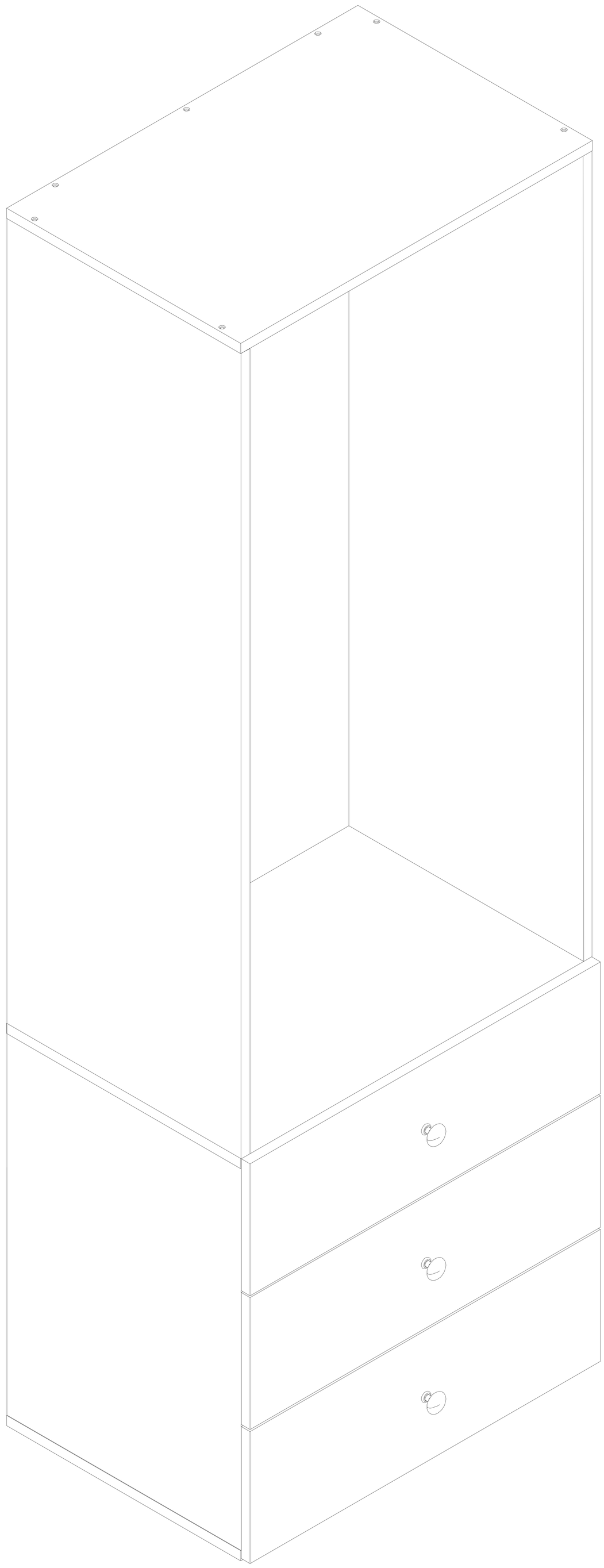

IMPORTANT INFORMATION!

· please read the entire manual before starting to assemble and/or using this product. follow the manual thoroughly and keep it for further reference.

AVOID SCRATCHES!

· In order to avoid scratching this funuture should be assembled on a soft layer-could be a rug.

IMPROVE EFFICIENCY!

· Try to find a partner to install with you,which can speed up the installation efficiency and shorten the time.

IMPORTANT!

· It is important that any product which is assembled using any kind of screw is re-tightened 2 weeks after assembly,and once every 3 months -in order to assure stability through-out the lifespan of the product.

For regular maintenance and dleaning of the product,for the frame,please use a rag dipped in neutral detergent to fully wipe it,and then dry it with a dlean rag.
for glass materials,wipe with a rag dampened with water glass dleaner,and then dry with a dry rag.

· Do not use an electric screwdriver,and do not use too much force when installing, because the board is easy to break.

ANTI-TOPPLE WARNING!

Overtumed furniture can cause serious or fatal crush injuries.to prevent tipping over, be sure to use the wall attachment,if not included with this product.please purchase the wall attachment that fit your wall.if unsure,seek professional advice.please read and follow each step of the instructions carefully.

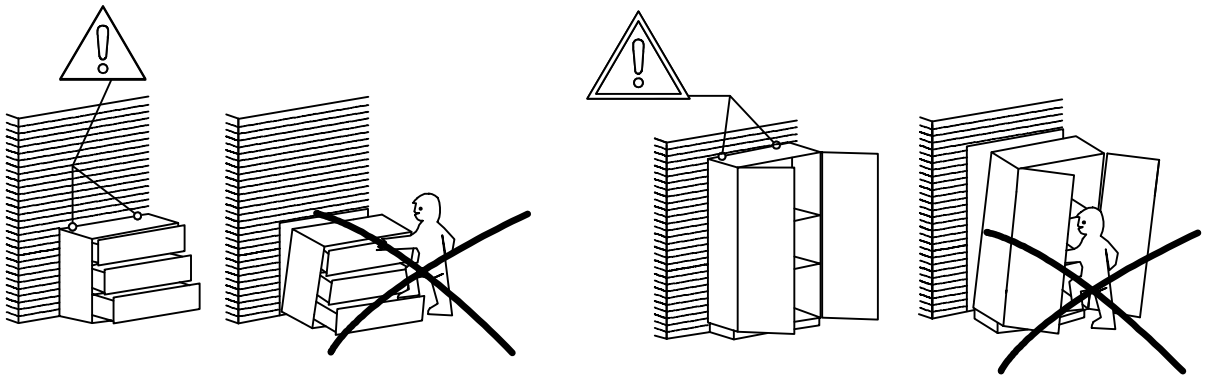

Please prepare the following tools

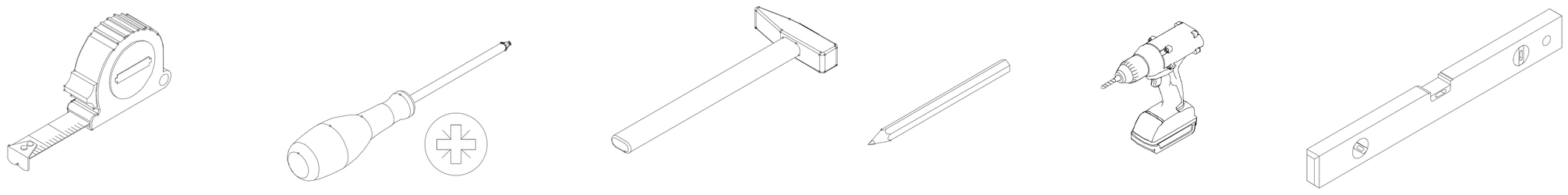

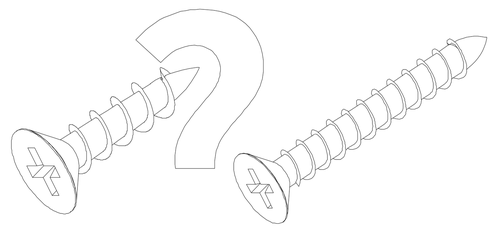

When installing, please carefully confirm whether each screw corresponds to the manual, accessories with similar shapes can be distinguishedb y si ze

A x 31	B x 31	C x 16	D x 18	E x 12
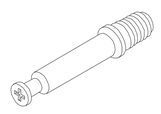		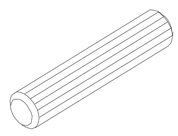	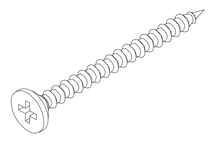	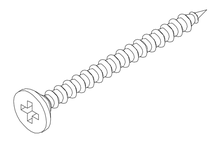

F x 2	G x 1	H x 3	J x 28	K x 3
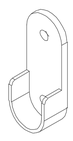	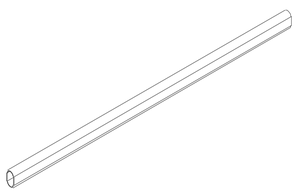	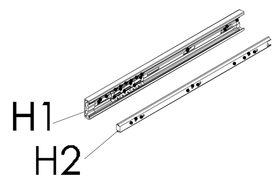		

L x 3	M x 9	N x 9
	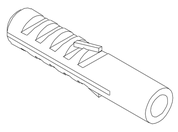	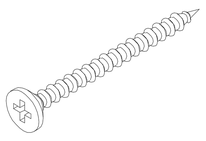

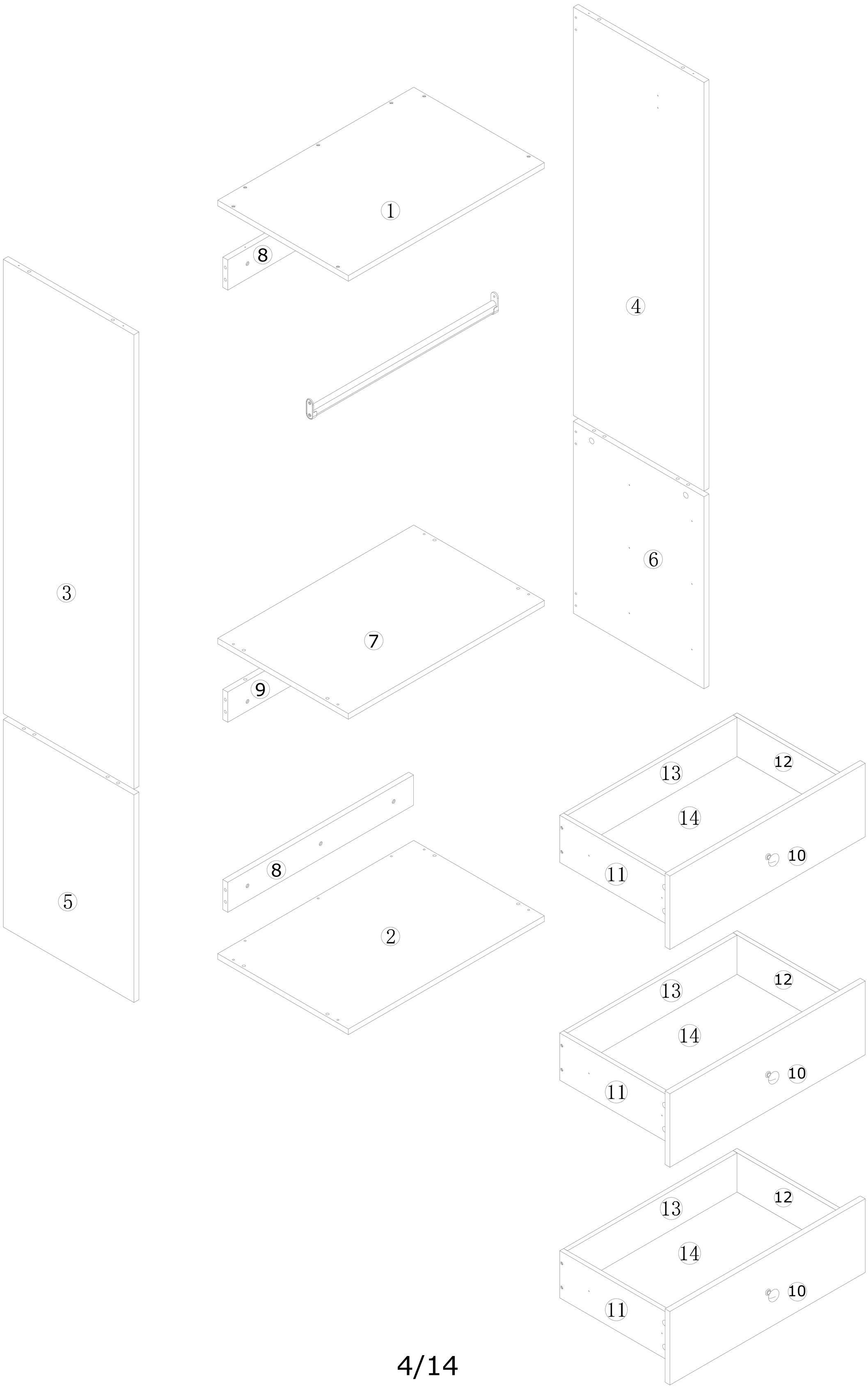
1
8
4
3
6
7
9
5
12
13
14
10
11
8
2
12
13
14
10
11
12
13
14
10
11

Slides Must Be Separated Before Assembly.
After Separated, Set Aside Until Needed for Assembly.

Las diapositivas deben separarse antes del montaje.
Después de la separación, déjelo a un lado hasta que sea necesario.

Les glissières doivent être séparées avant l'assemblage.
Après la séparation, mettez de côté jusqu'au moment de l'assemblage.

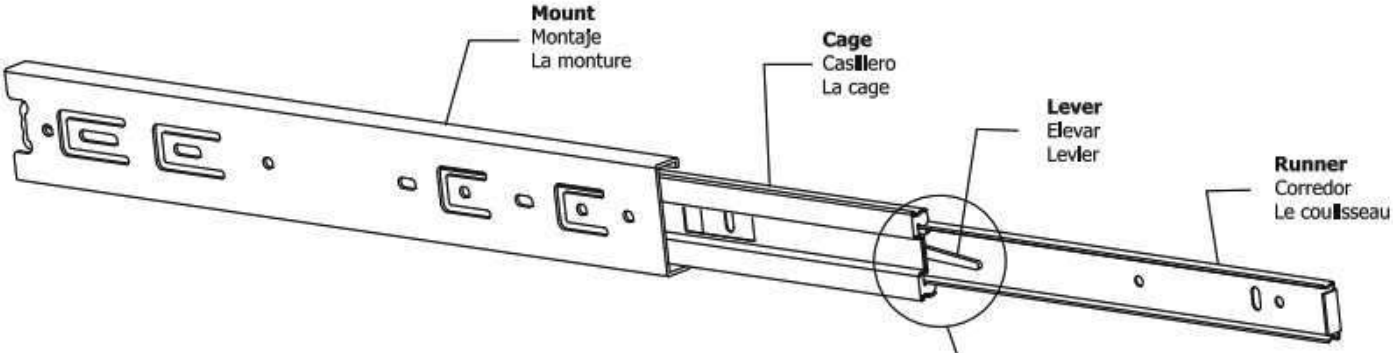

STEP 1: Extend Slide
Extender la diapositiva
Extendre la diapositive

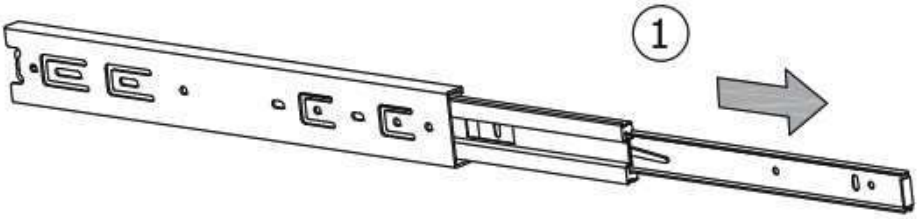

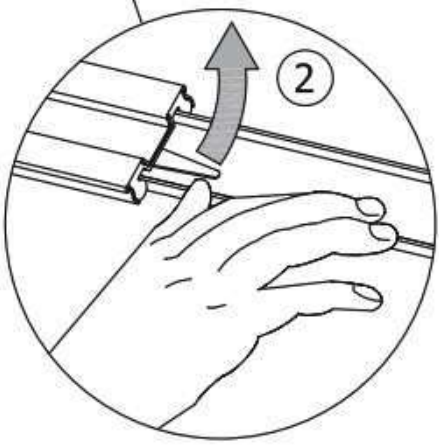

STEP 2: Push Lever UP
Empujar hacia arriba
Lever le levier

STEP 3: Remove Runner
Quitar el corredor
Enlever le coureur

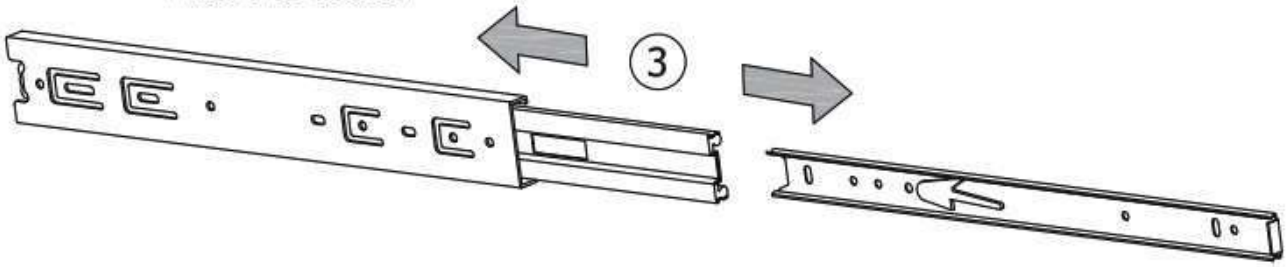

1	A x 4	F x 2	J x 4	
	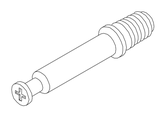	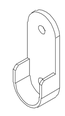		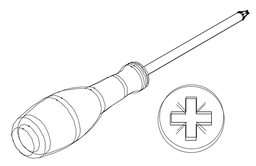

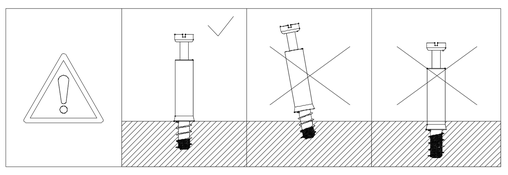

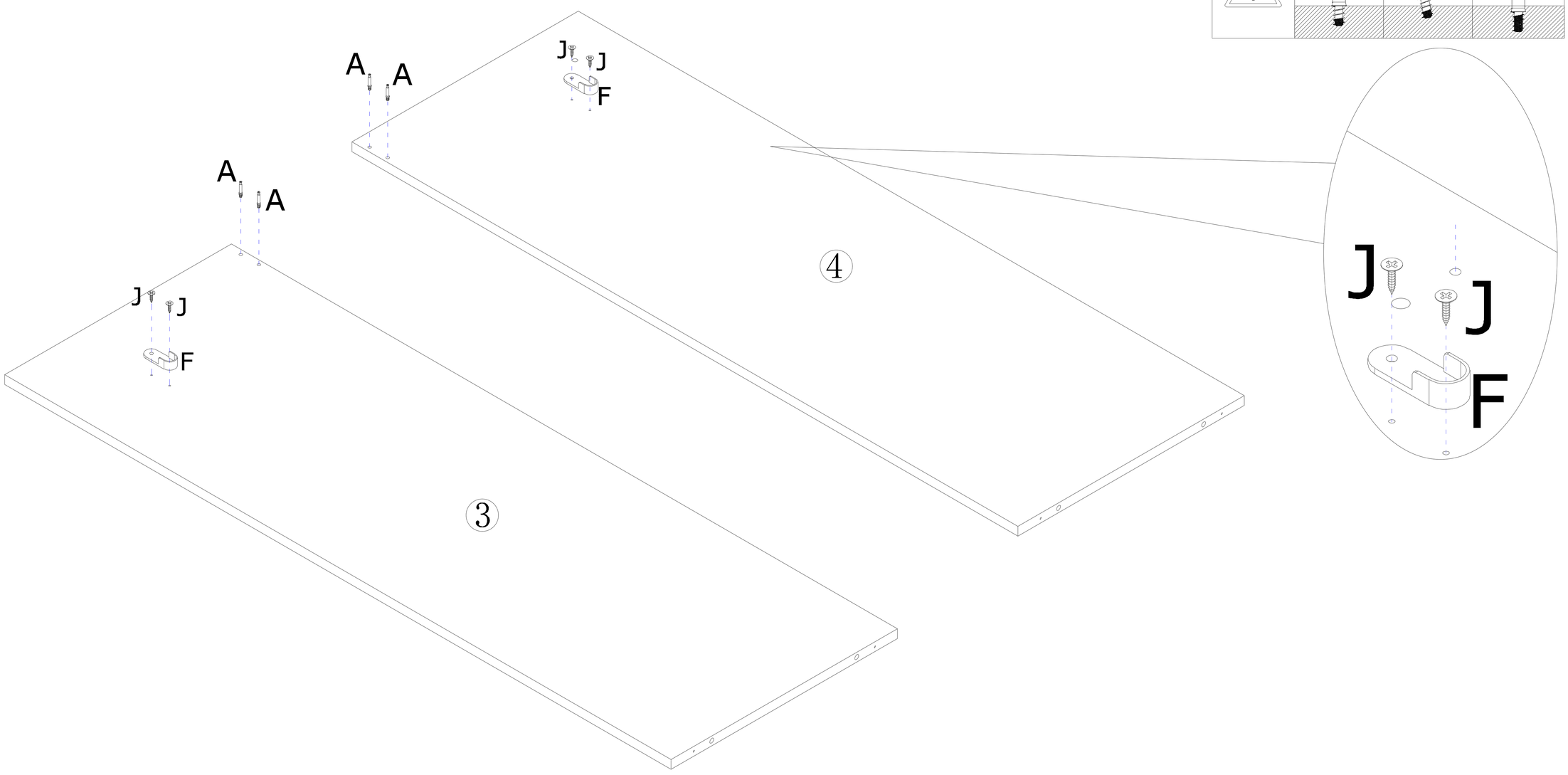

2	B x 4	
		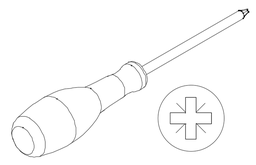

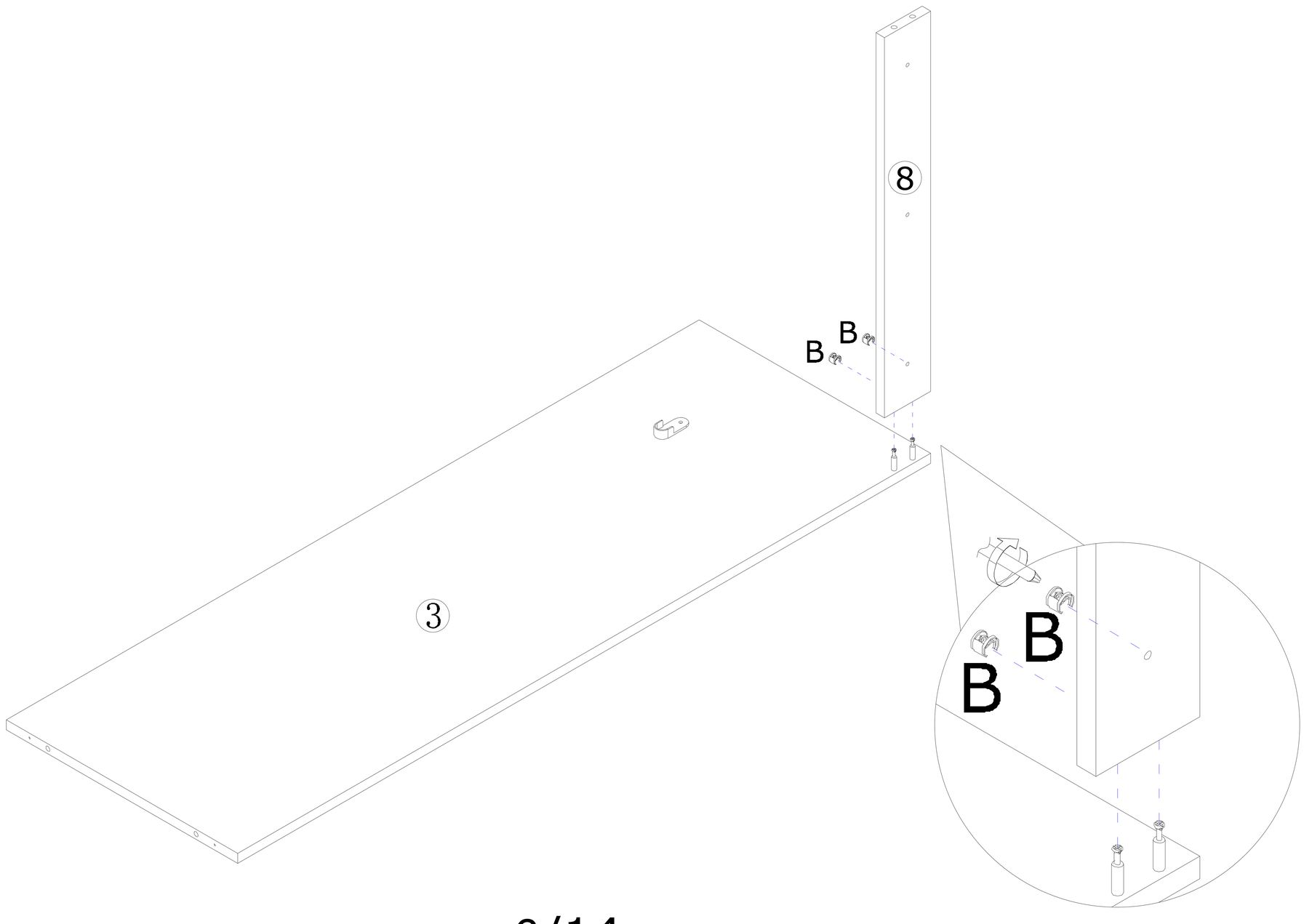

3	B x 2	

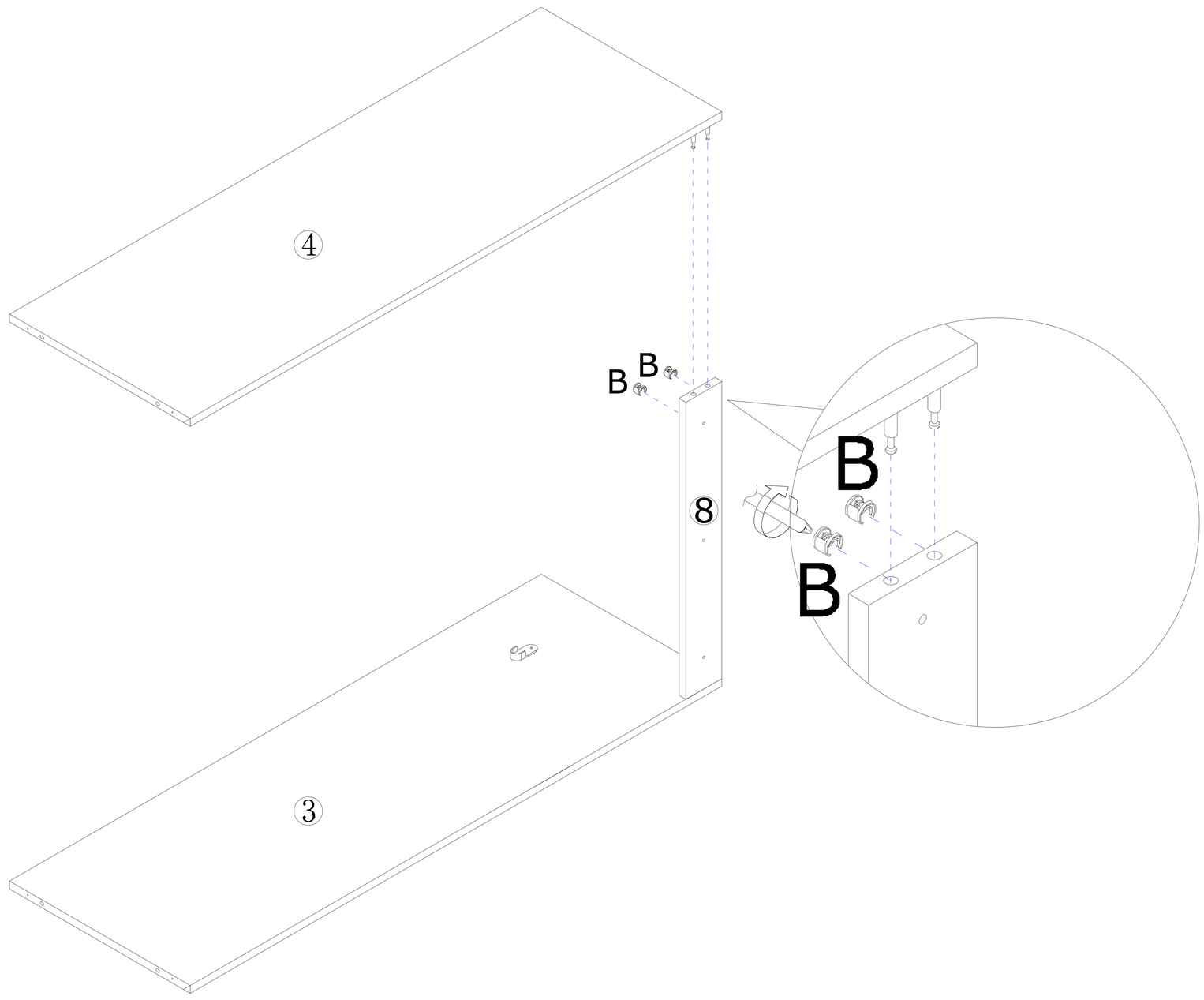

4	C x 4	D x 7	

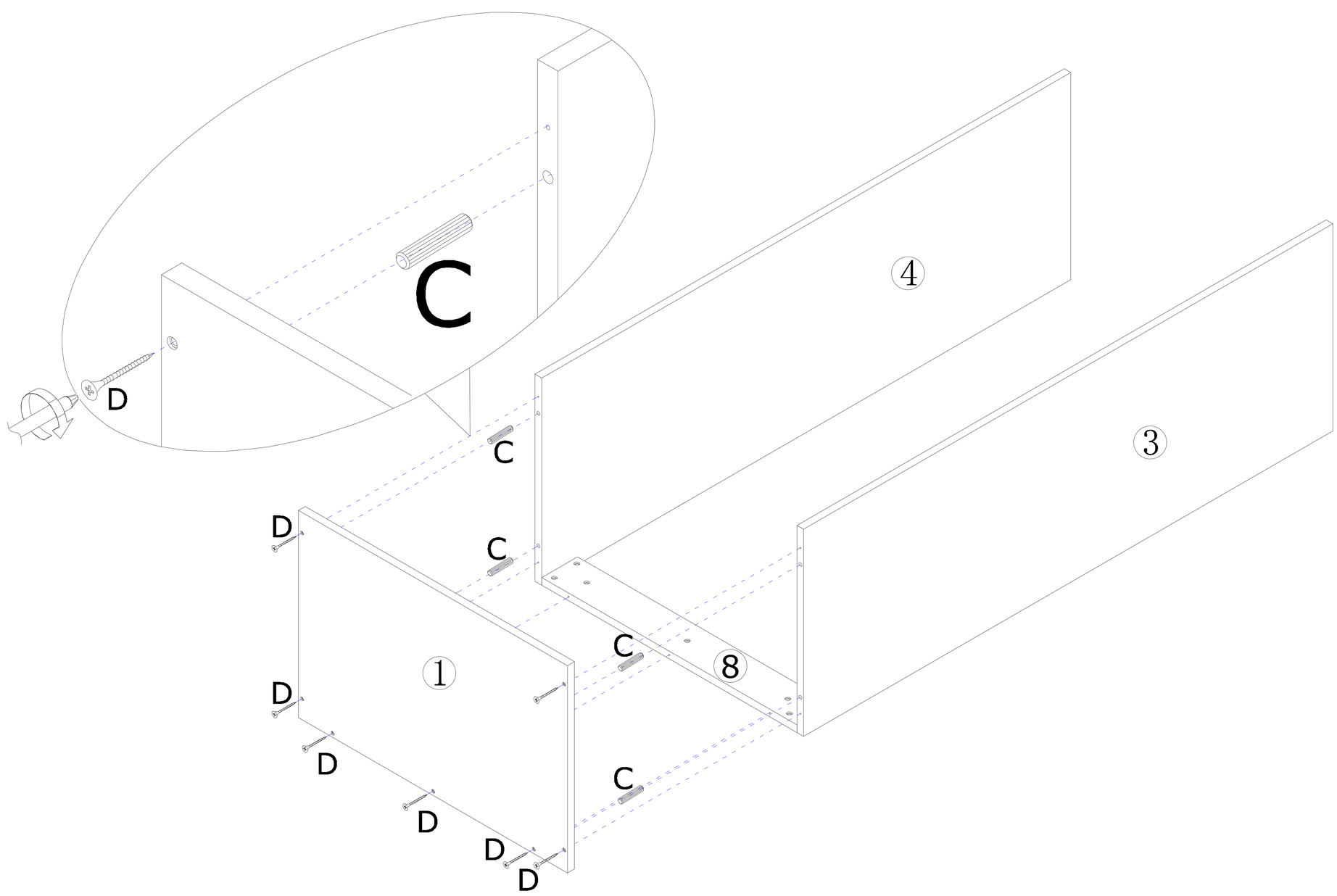

5

A x 7

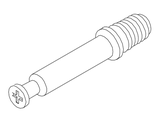

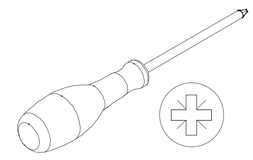

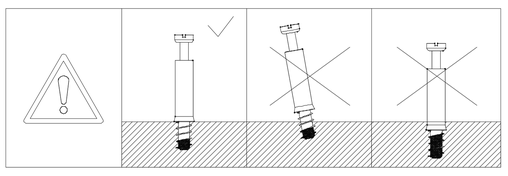

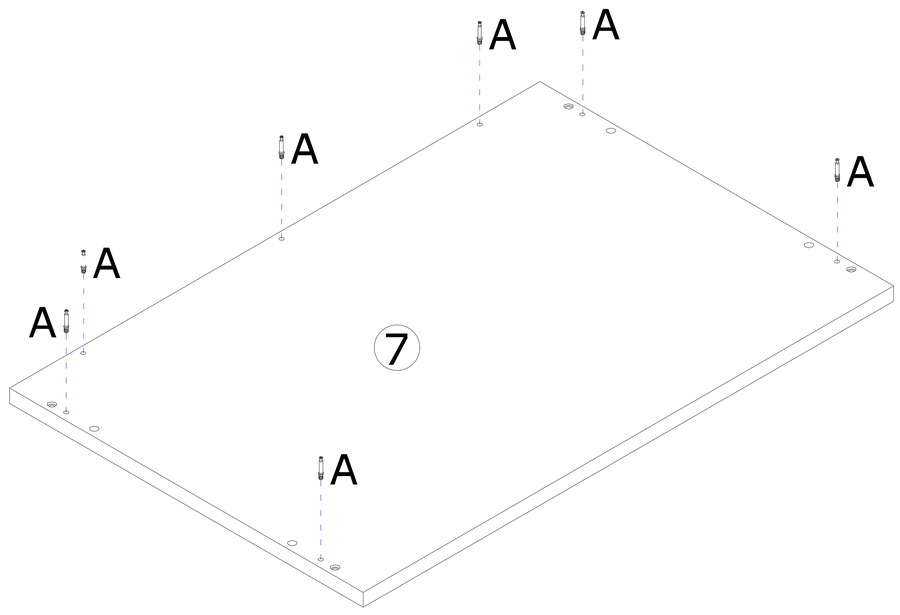

6

C x 4

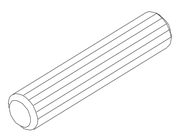

D x 4

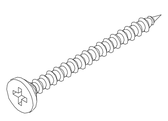

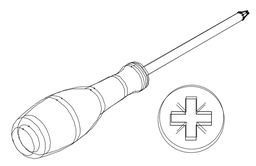

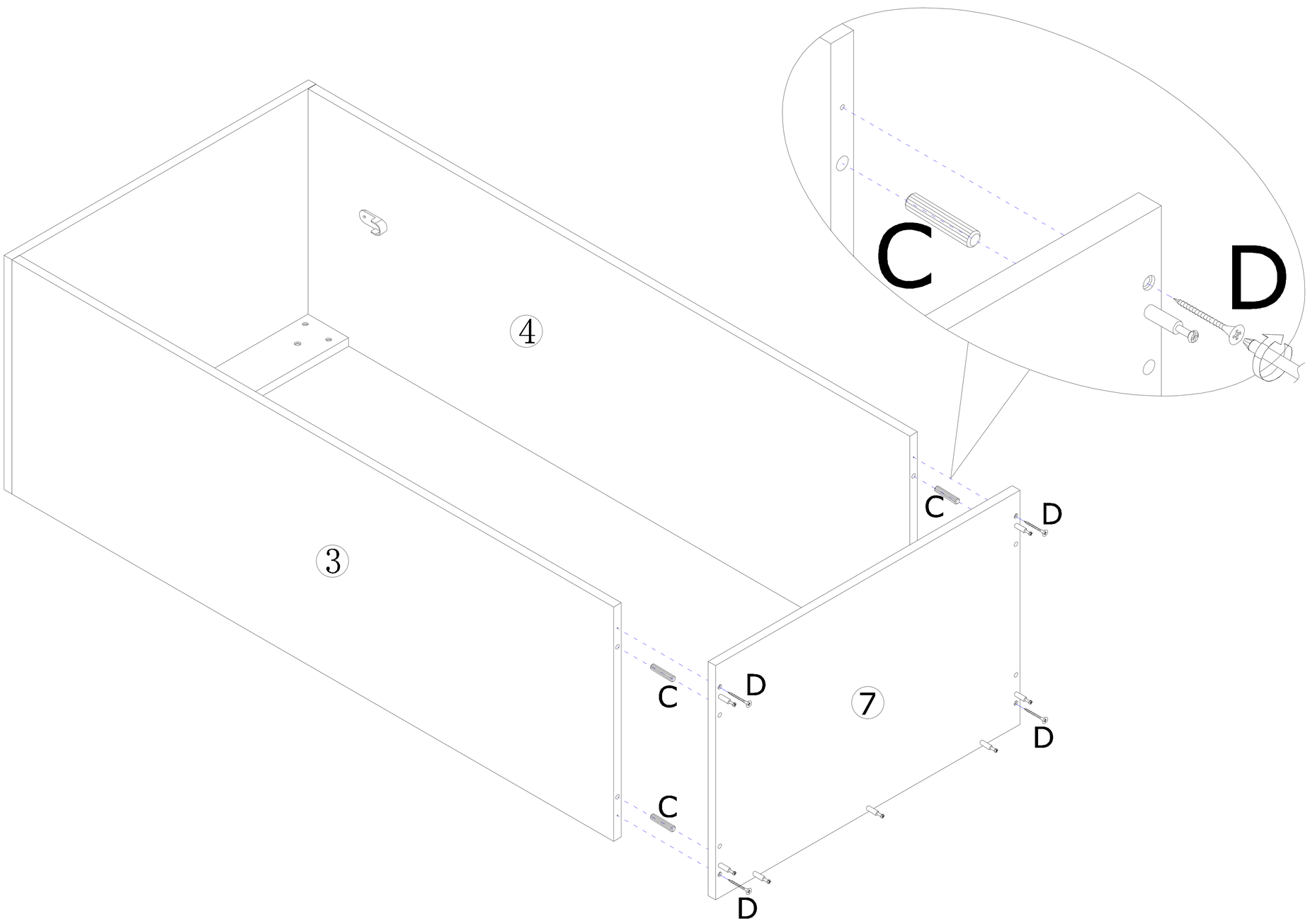

7	A x 8	H x 3	J x 12	
	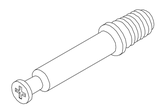			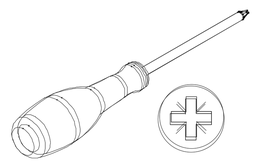

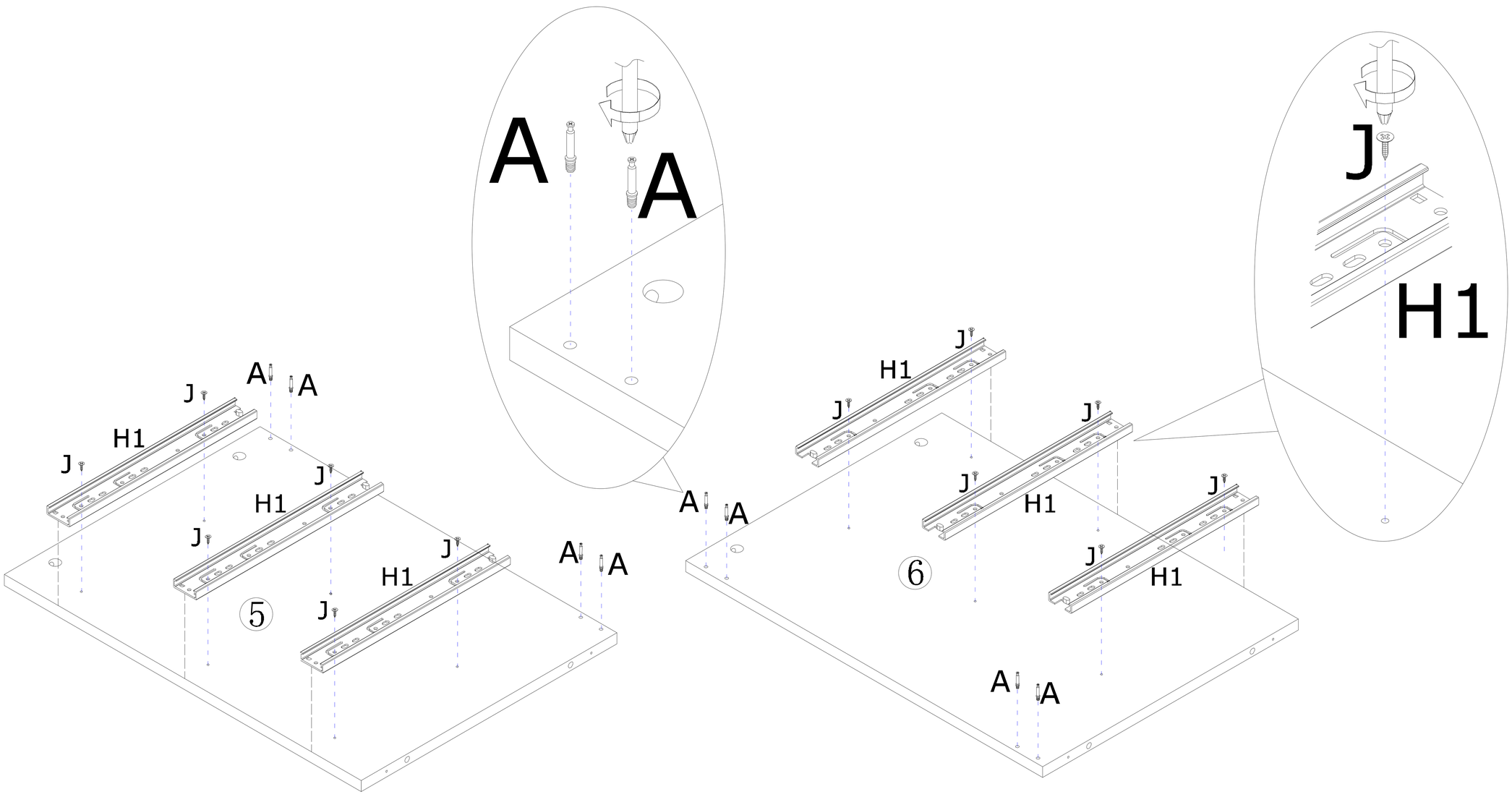

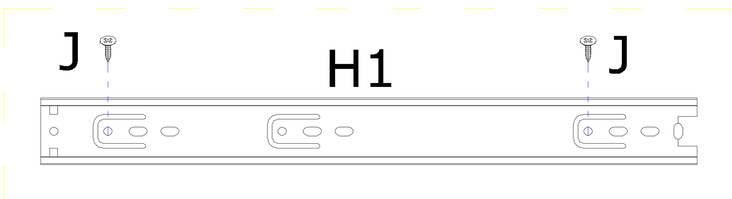

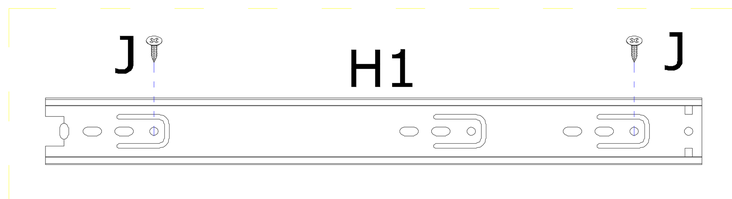

8	B x 8	
		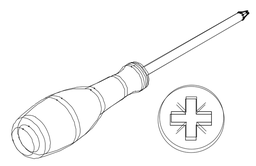

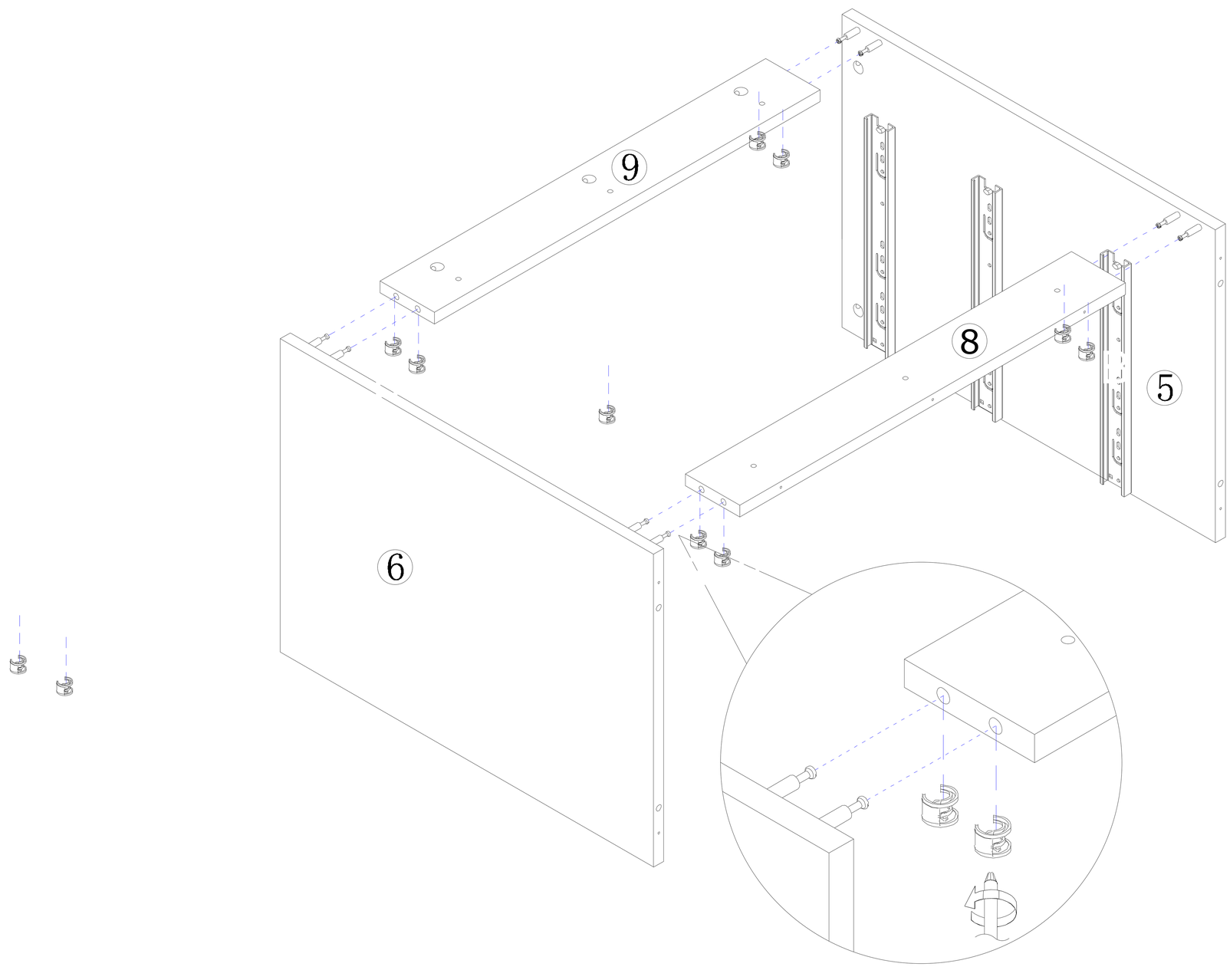

9	C x 4	D x 7	
	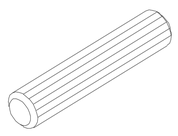	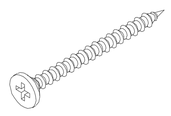	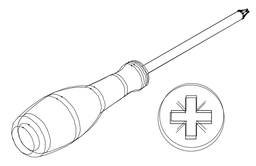

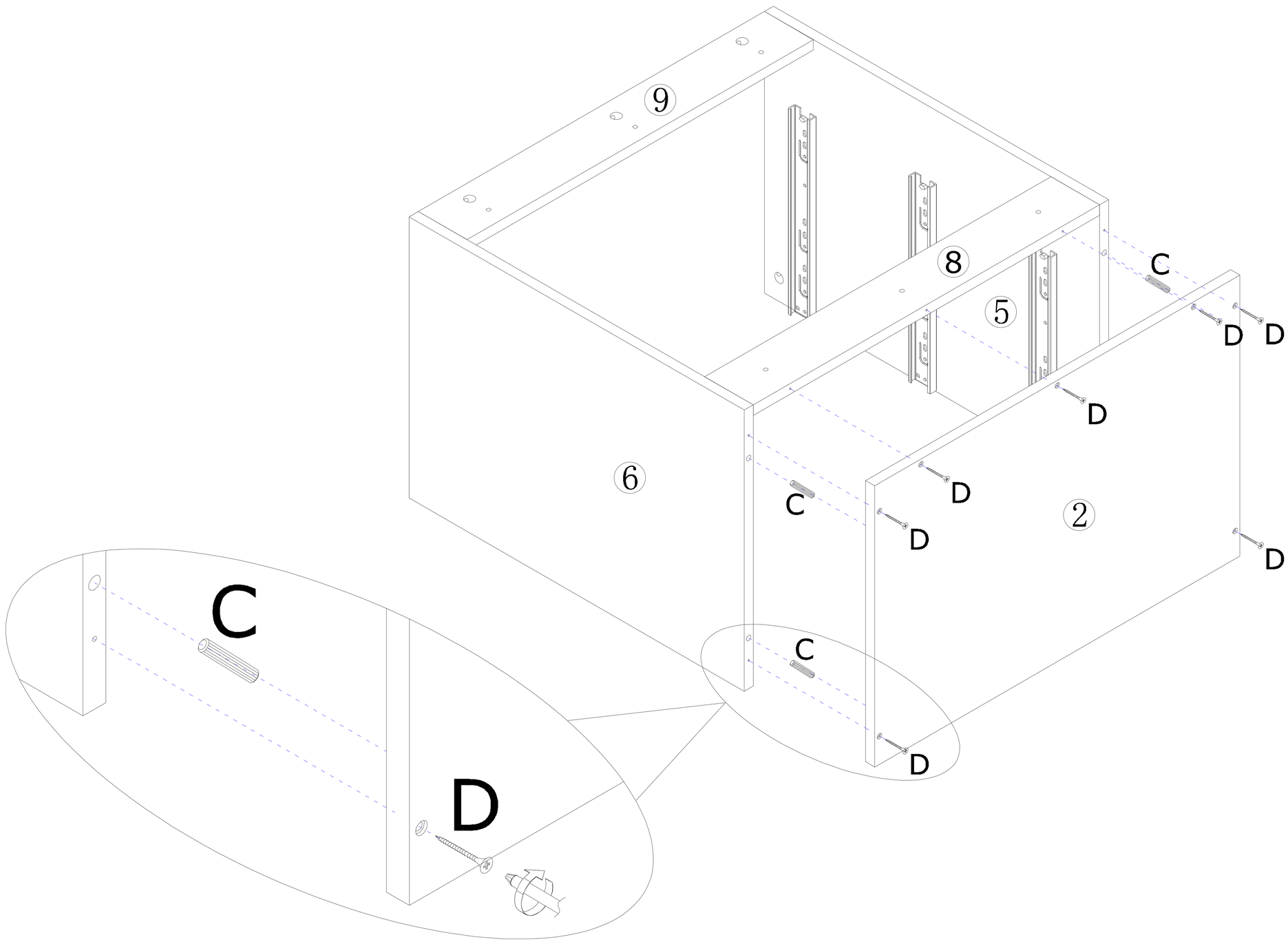

10	B x 7	C x 4	
		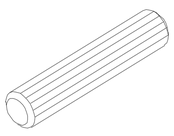	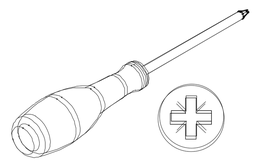

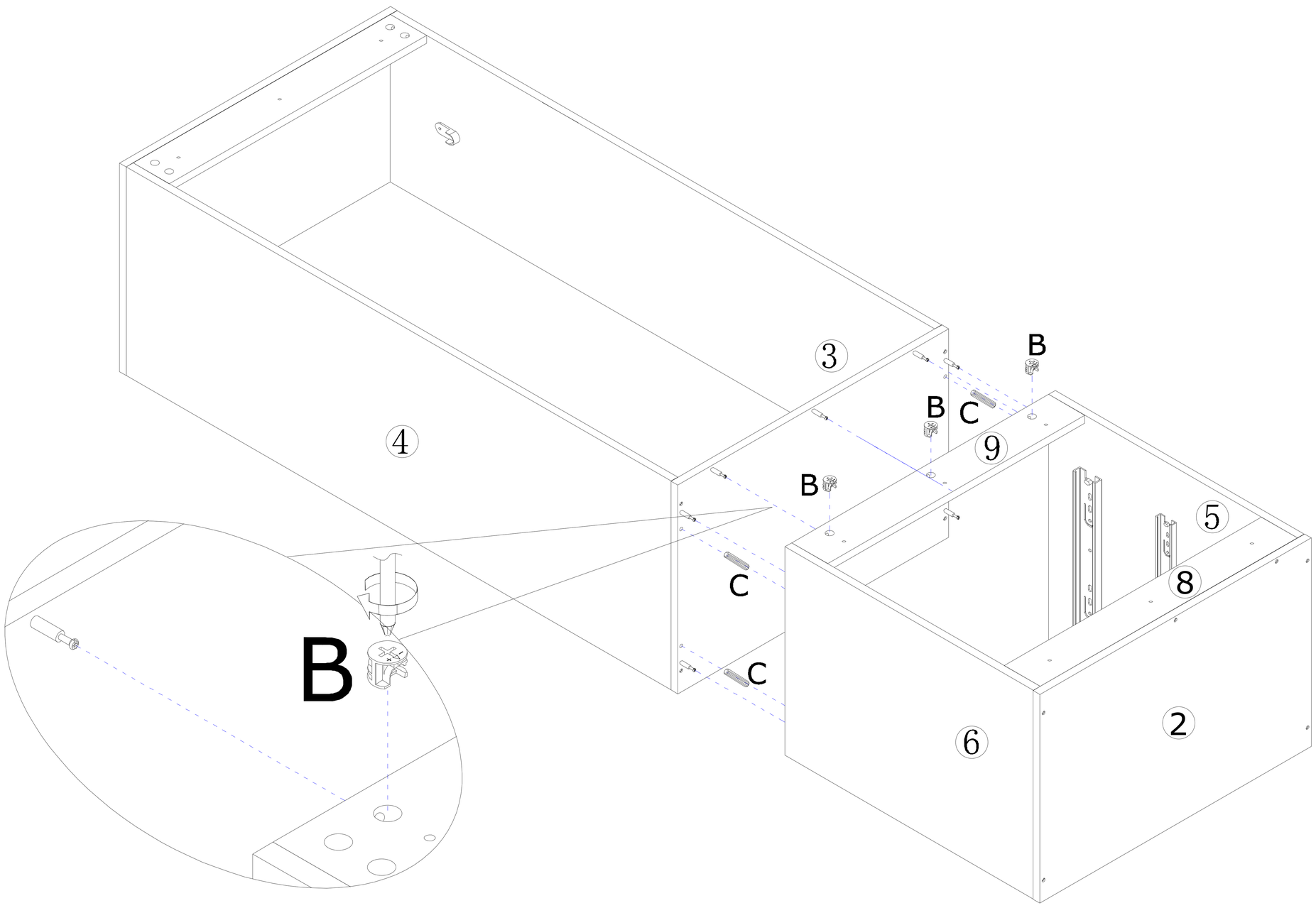

11

M x 9

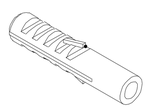

N x 9

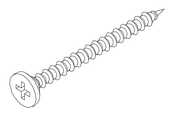

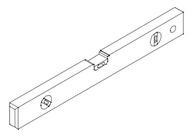

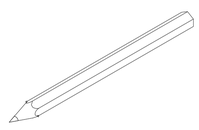

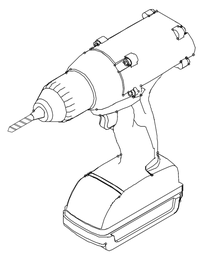

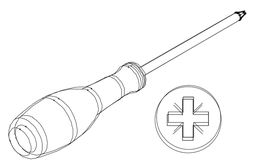

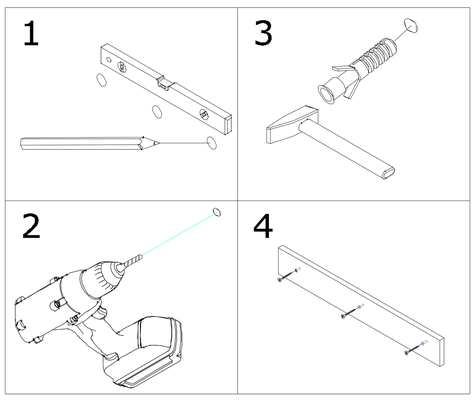

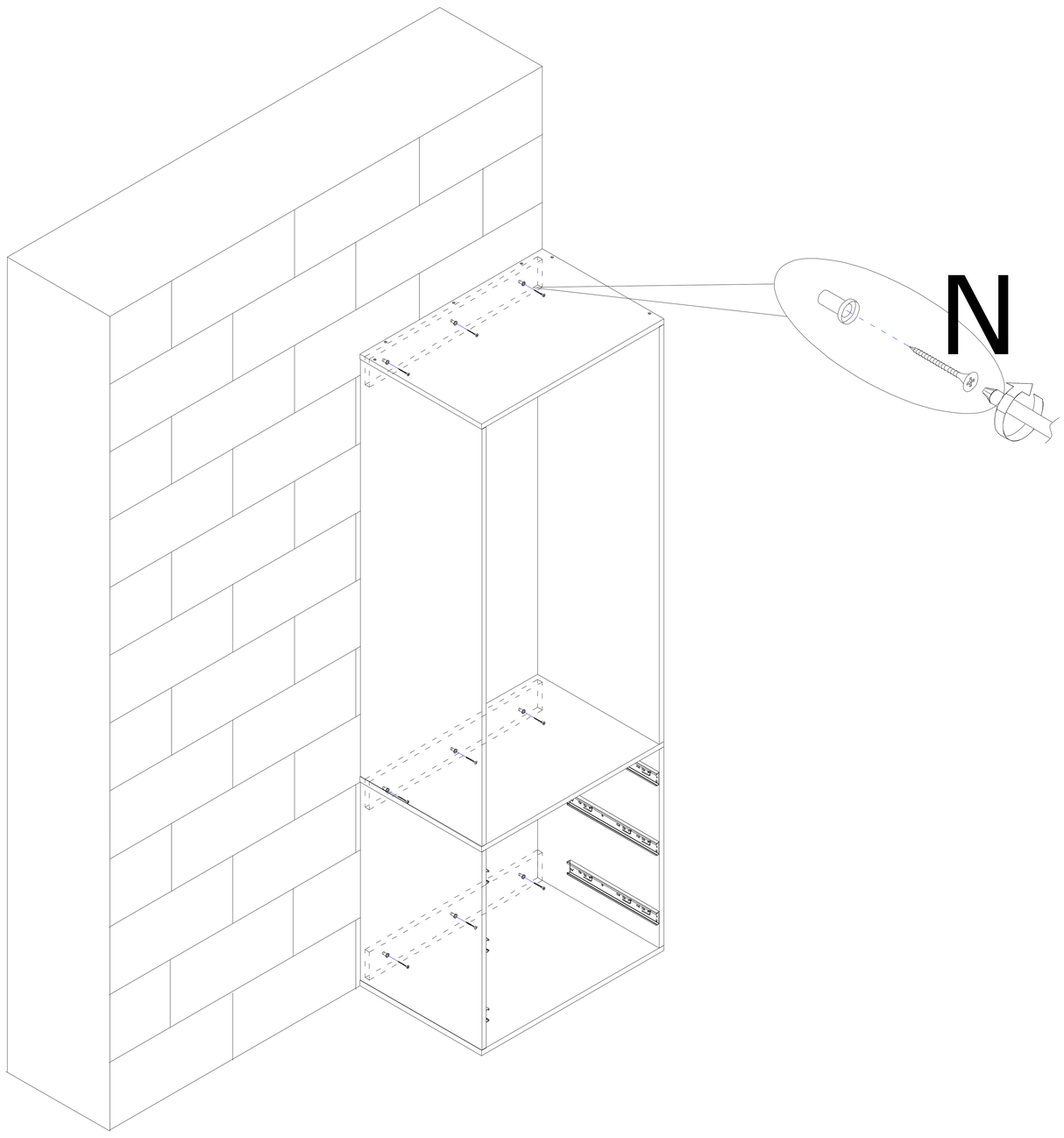

12

H x 3

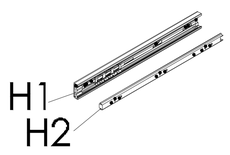

J x 12

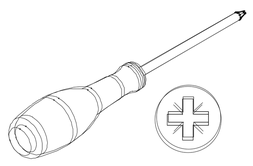

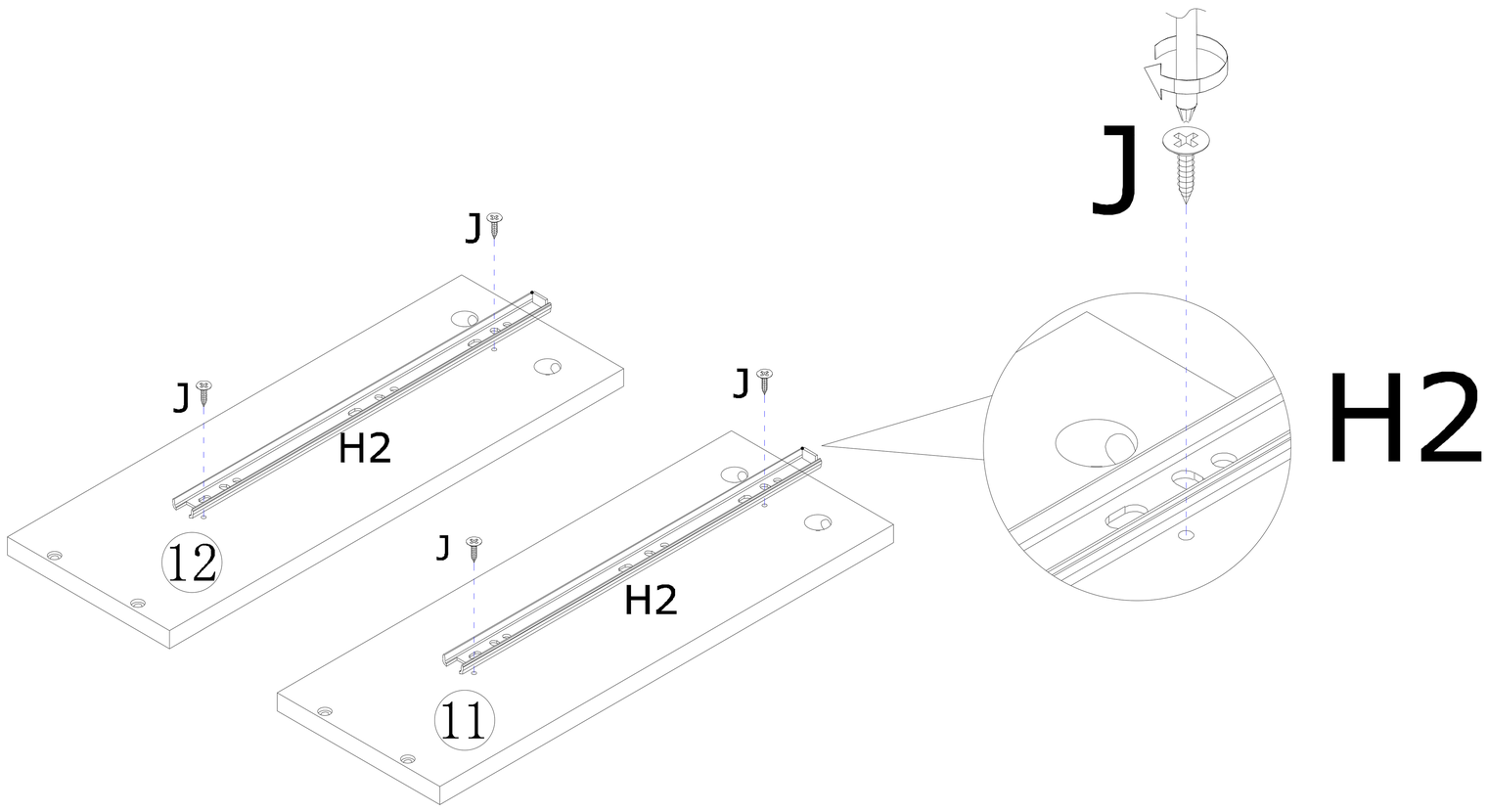

x3

13

A x 12

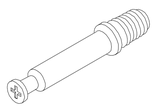

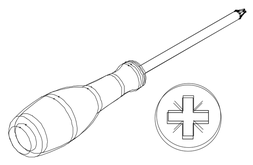

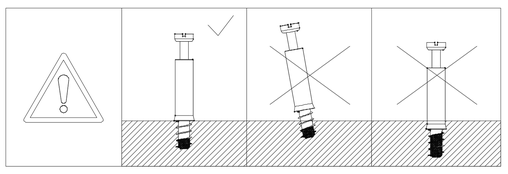

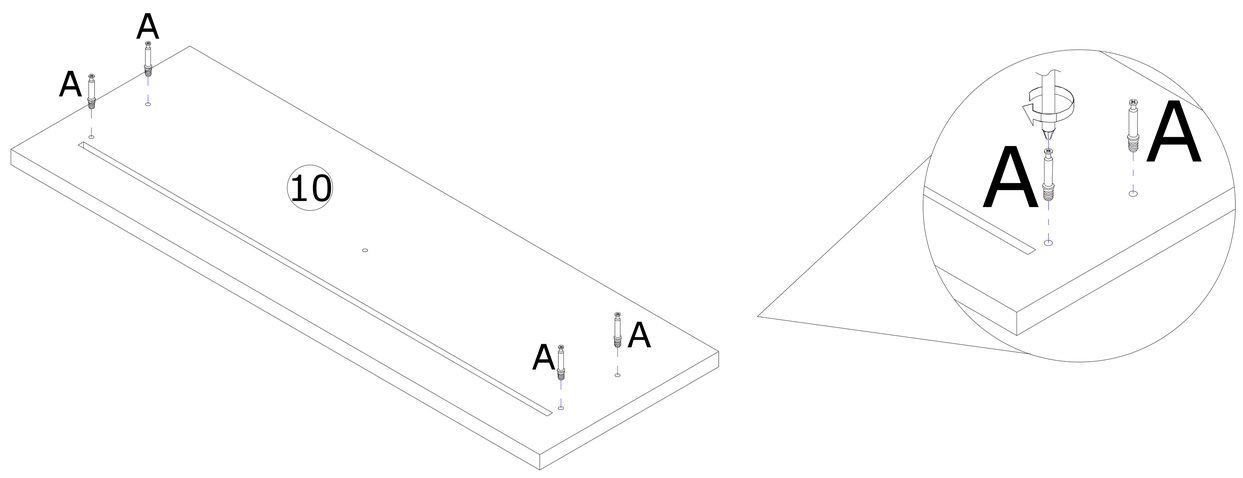

x3

14

B x 12	K x 3	L x 3

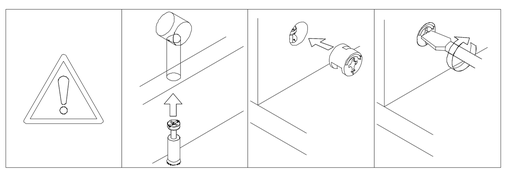

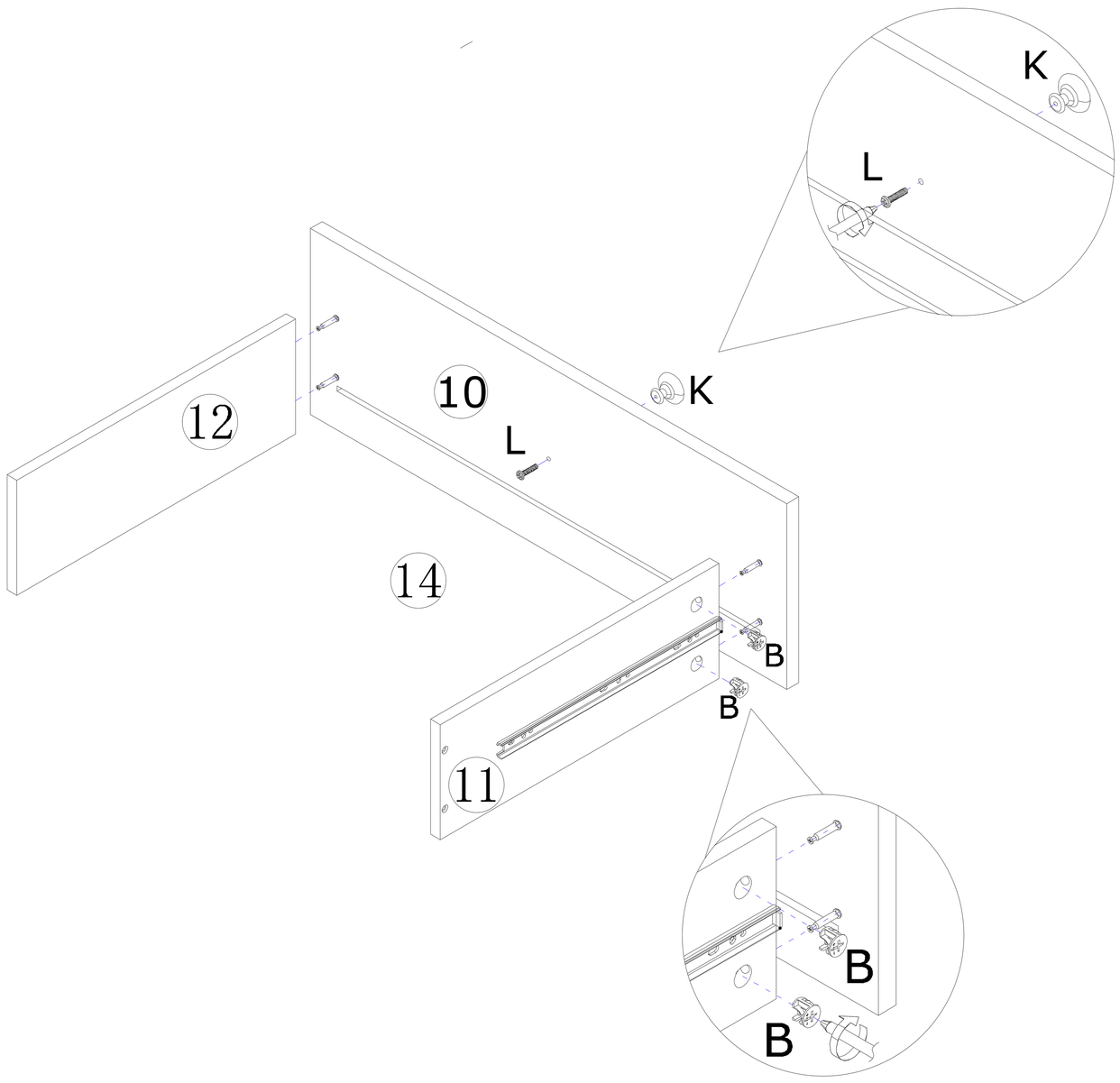

x3

15

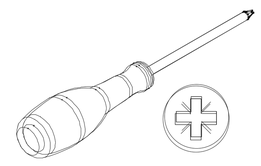

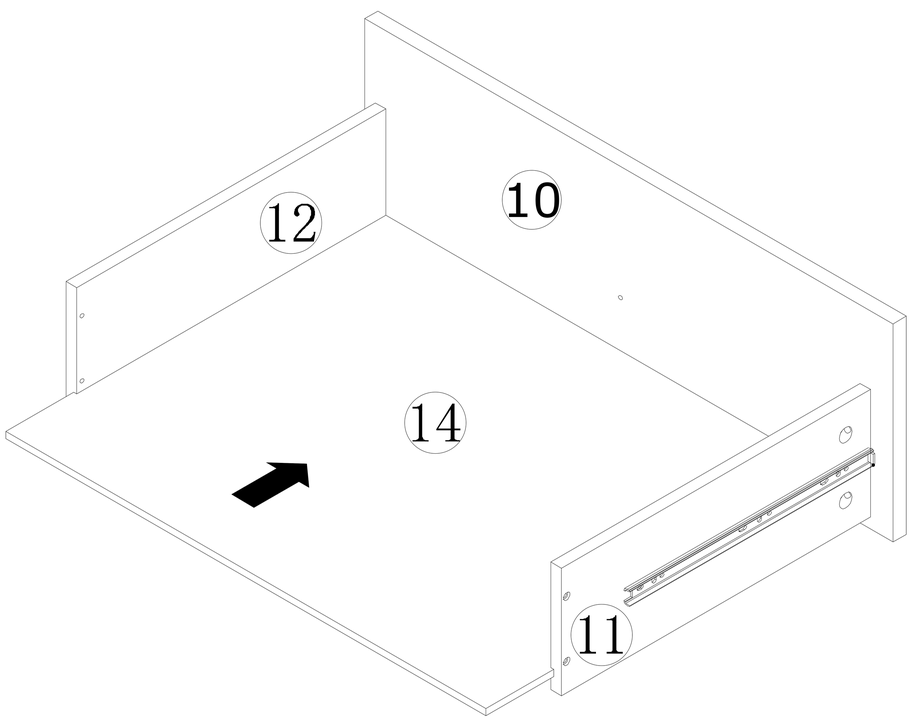

x3

16

E x 12

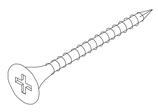

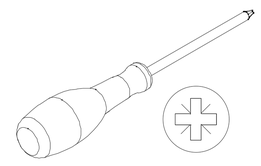

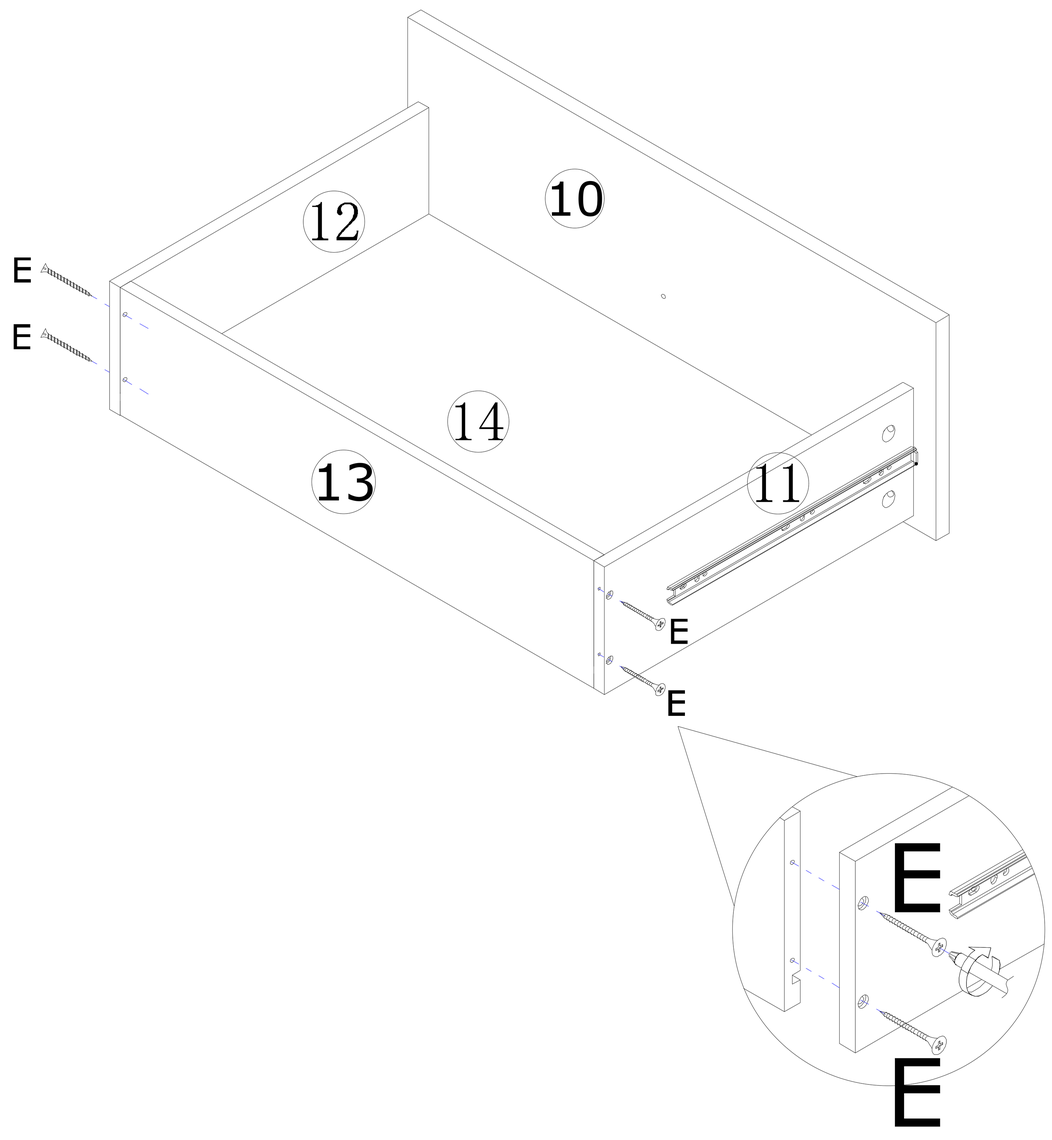

x3

17

G x 1

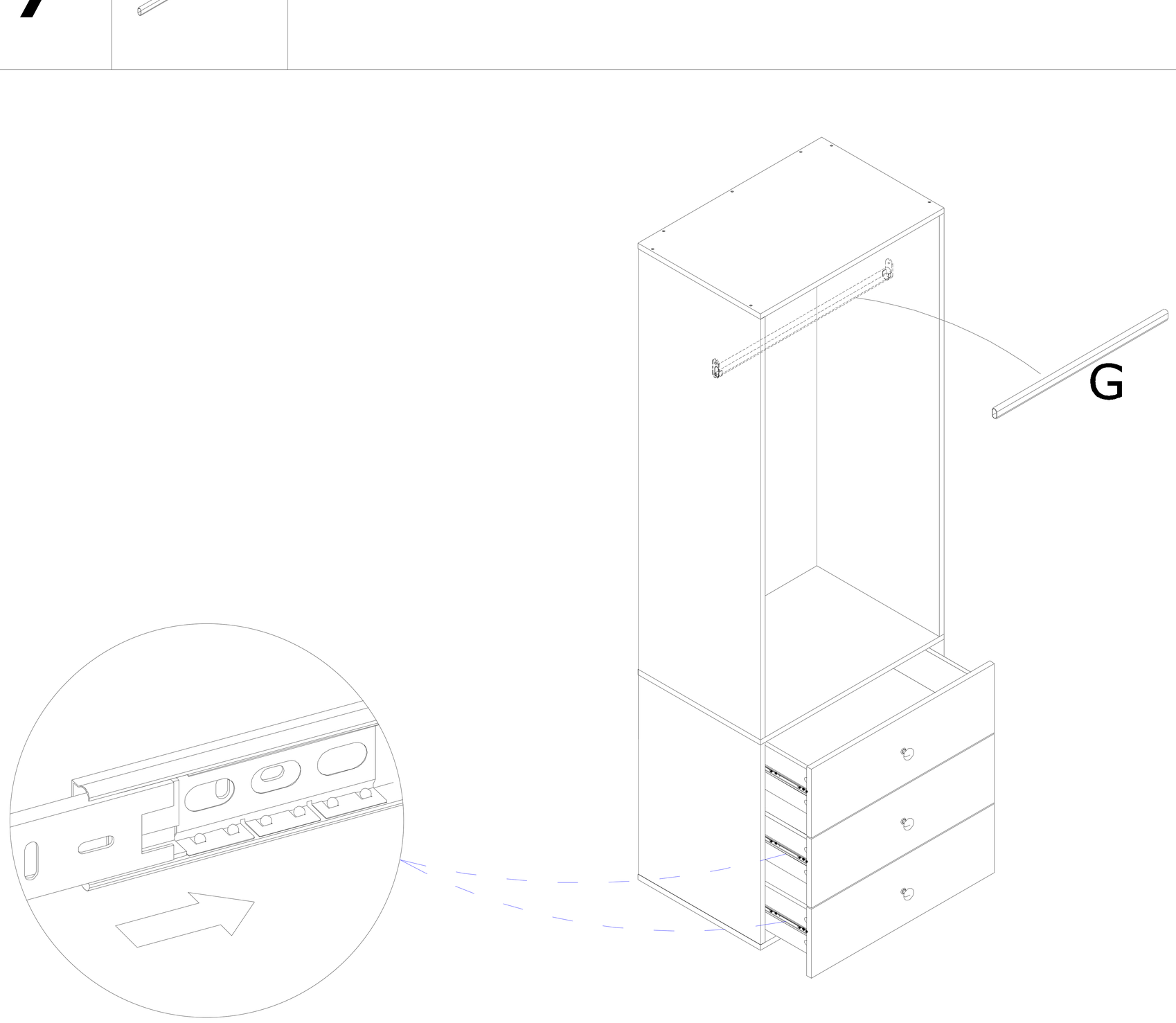

WARRANTY

WARRANTY CLAIMS

·There is a 30-day warranty for broken furnlture or any other problems that do not work properly.the warranty will start from the date of purchase which must be verlfled by proof of purchase.

·The product must be used in accordance with the instructions provided.for health reasons.

·For other reasons,if the furniture needs to be returned,it must be cleaned and dried **and operated wlthin 30 days of recelpt.**

Type of Warranty Claim

·Fallure to follow the furniture instructions will invalidate the warranty.attention **please.**

·Does not include damage during installation,but includes damage during **transportation.**

Scope of responslbllty

·Shall not bear any responslbllty for mlsuse or user damage and /or loss of parts **durlng the installatlon of furnlture.**

·After using,the damage and scratches of the furniture are not covered by the **warranty.**

The Warranty Relates to All bought in The us and Covers The Following areas

·Sheet parts:1 month from the date of purchase.

·Electrical parts:1 month from the date of purchase.

RETURNS

CHANGED YOUR MIND AND NEED TO RETURN YOUR ITEM?

PLEASE FOLLOW THE BELOW INSTRUCTIONS:

•If you have purchased and have simply changed your mind, follow the retailer's instructions for returns.

DEFECTIVE ITEMS

•If your item is defective in any way, i.e. it doesn't work but you can't identify why,

DAMAGED ITEMS

•If you receive an order with obvious shipping damage from the retailer, then we suggest the delivery is refused. If the delivery has been accepted and then shipping damage is found, please follow the specific instructions advised by the retailer.

•In all circumstances, please save all packaging material and paperwork for the order.

•Please be aware that if you dispose of packaging material or attempt to return the merchandise without contacting the retailer, you jeopardize your chances of making a claim, and you may not receive a credit for the return.