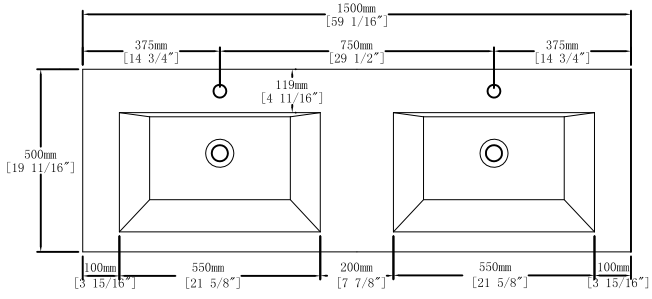

Top View

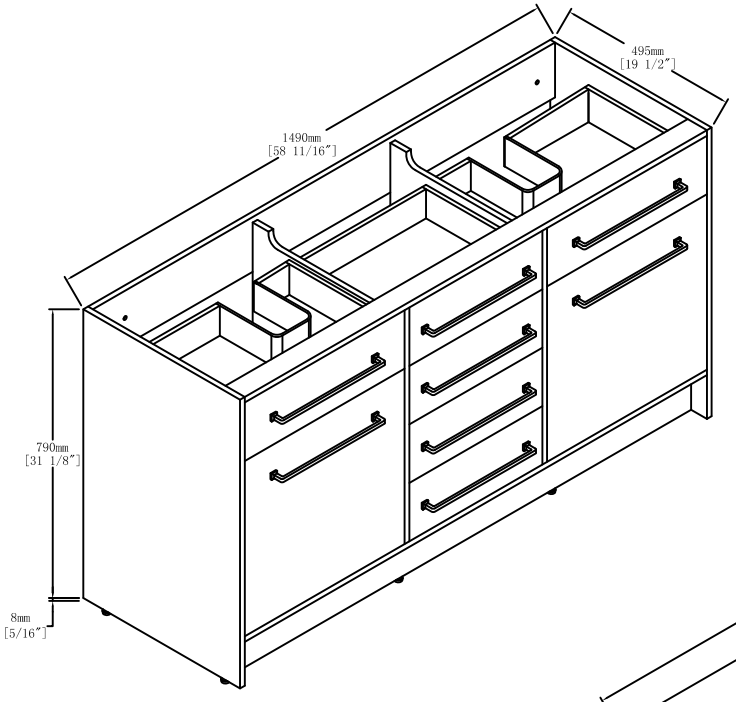

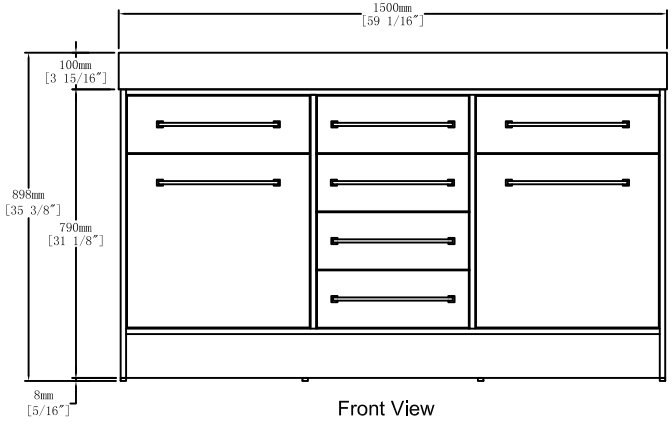

Front View

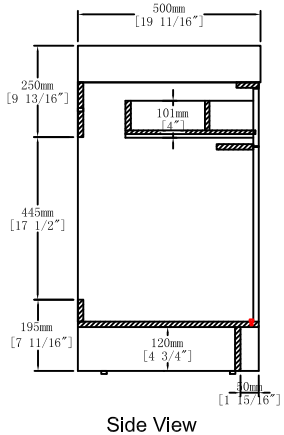

Side View

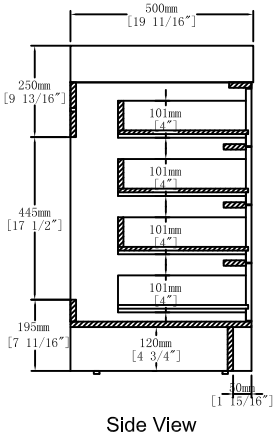
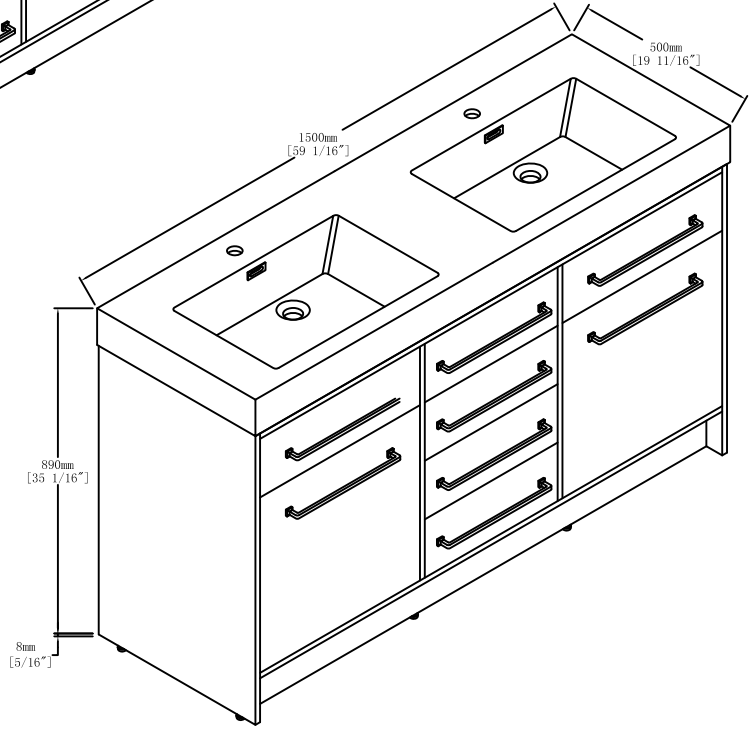
Side View