ASSEMBLY INSTRUCTION

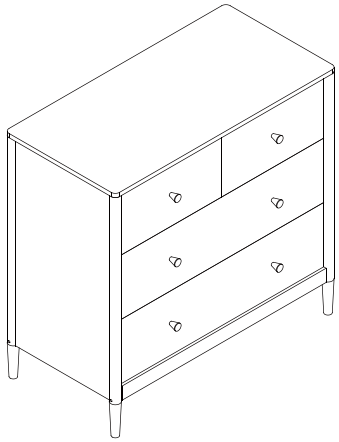

A x 32	B x 32	C x 22	4 x 35 D x 20	E x 6	3 x 12 F x 48	G x 8	H x 6
J x 2	K x 2	L x 2	M x 4	N x 4	O x 8	3 x 14 P x 8	Q x 4

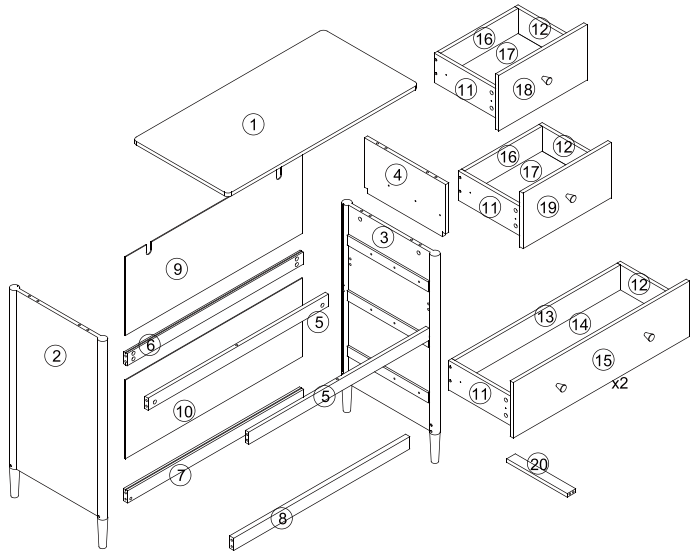

STEP 1

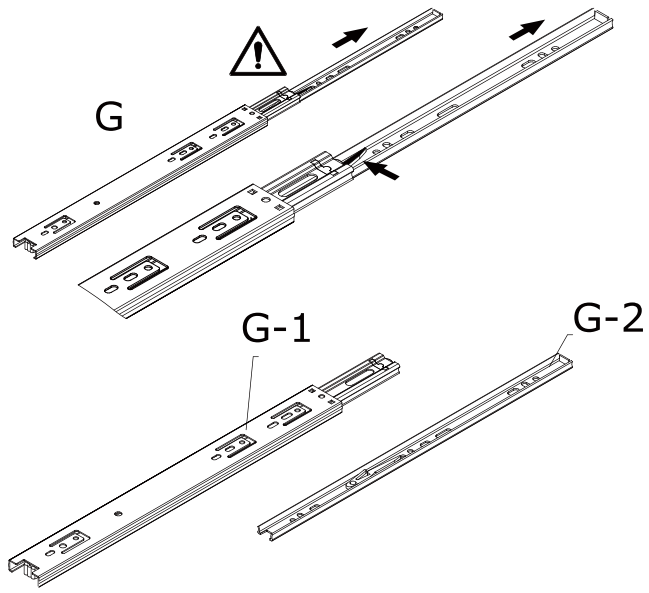

STEP 2

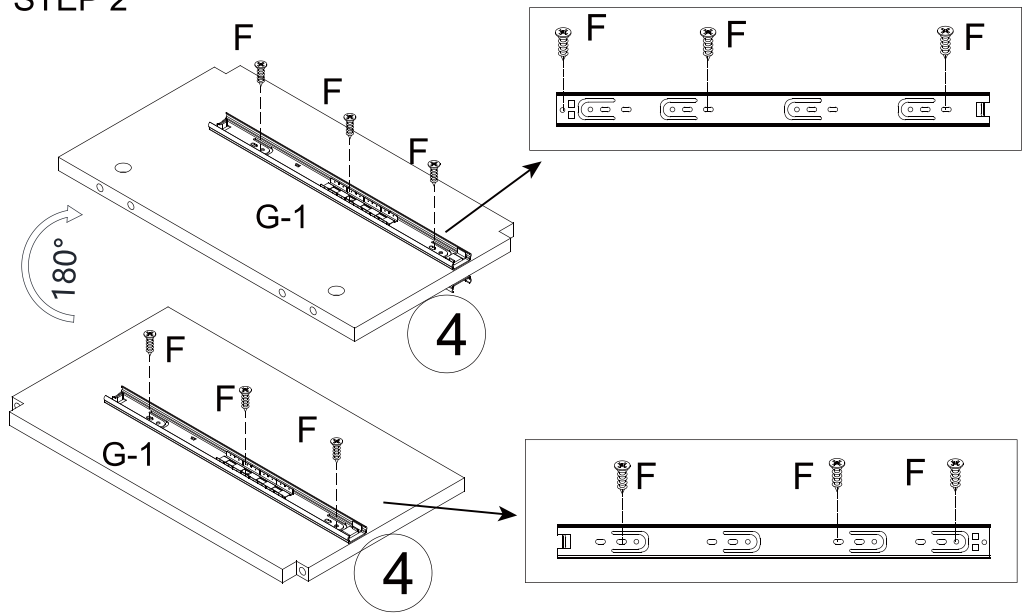

ASSEMBLY INSTRUCTION

STEP 3

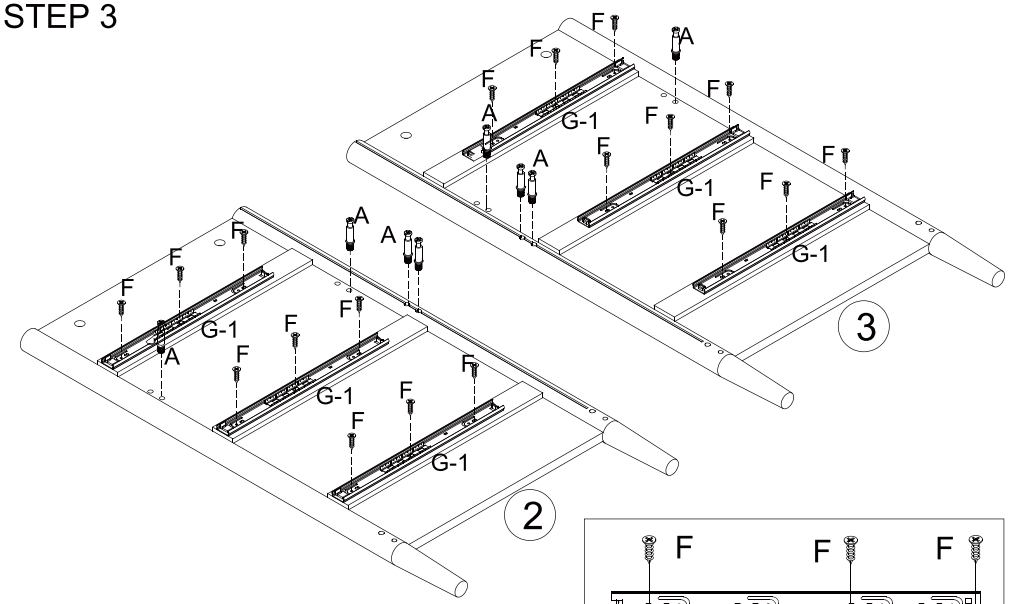

STEP 4

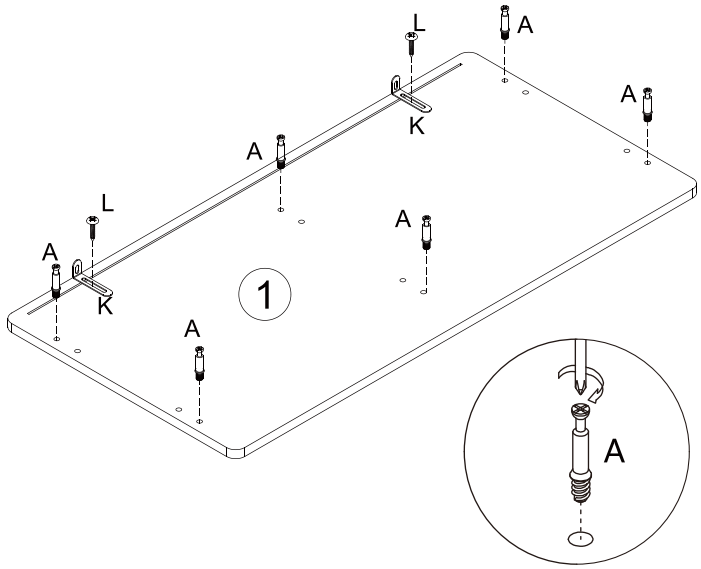

STEP 5

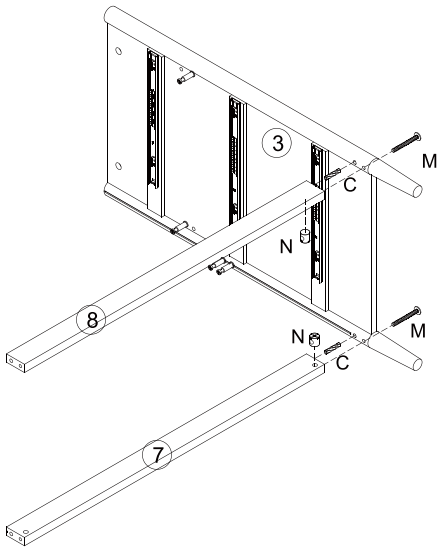

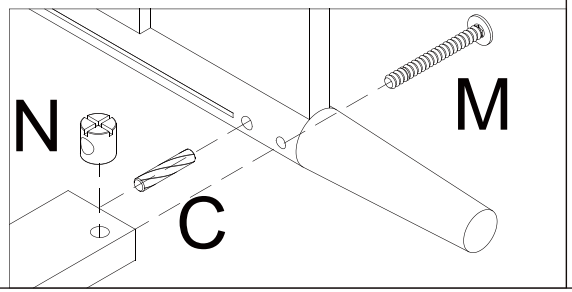

STEP 6

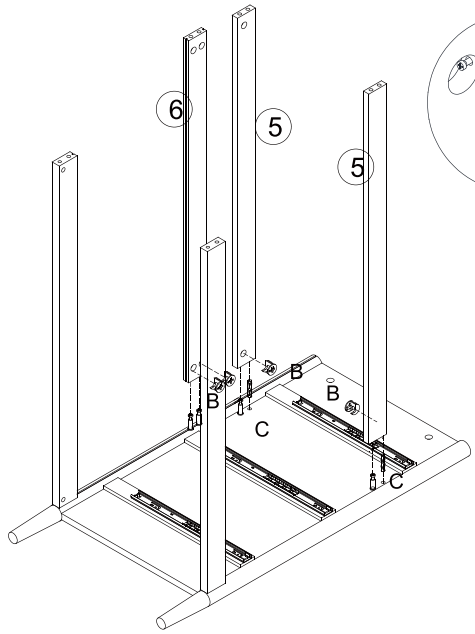

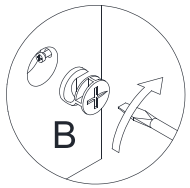

ASSEMBLY INSTRUCTION

STEP 7

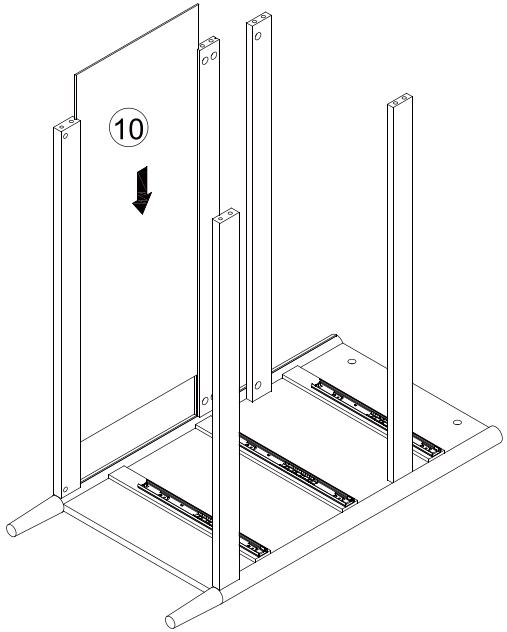

STEP 8

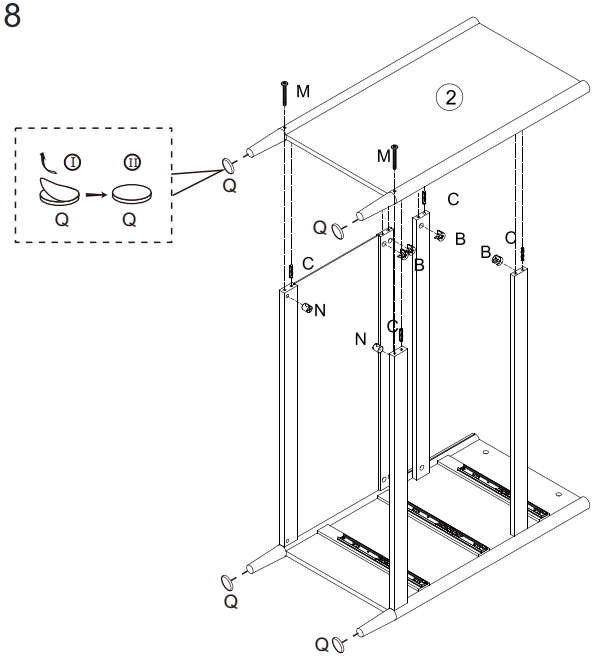

STEP 9

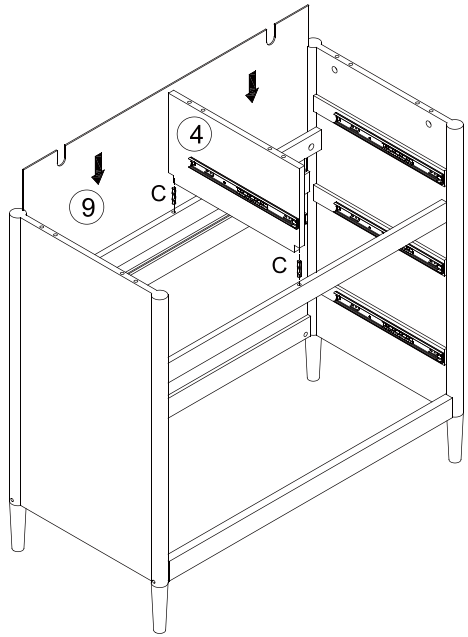

STEP 10

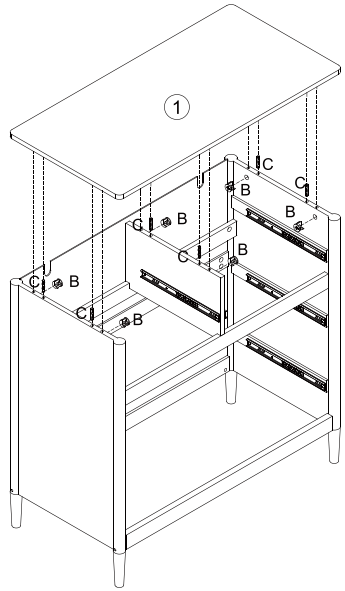

ASSEMBLY INSTRUCTION

STEP 11

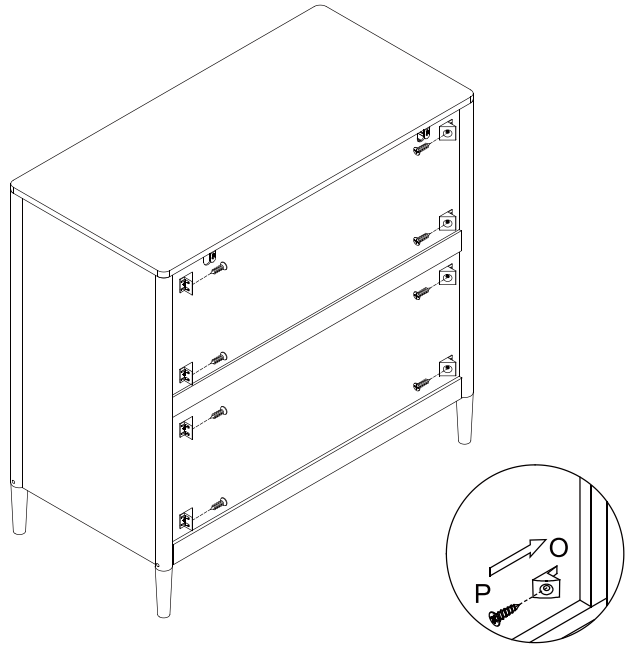

STEP 12

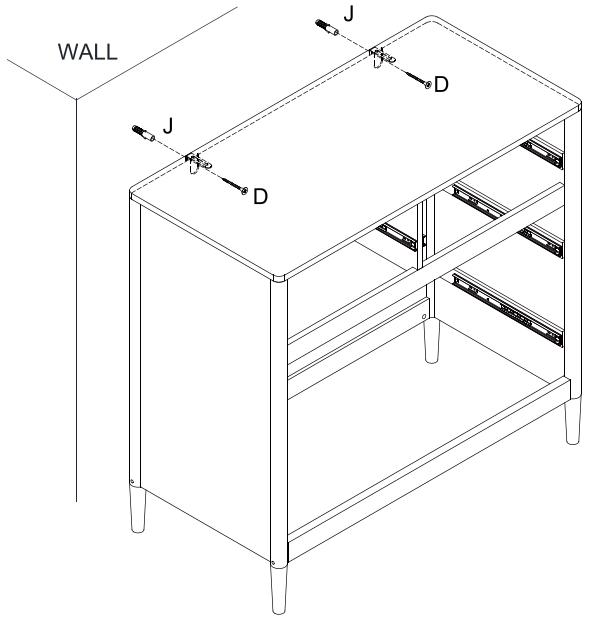

STEP 13

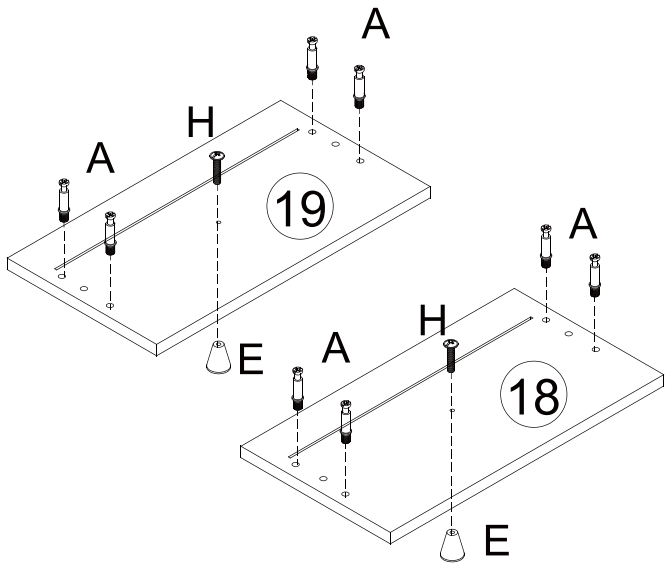

STEP 14

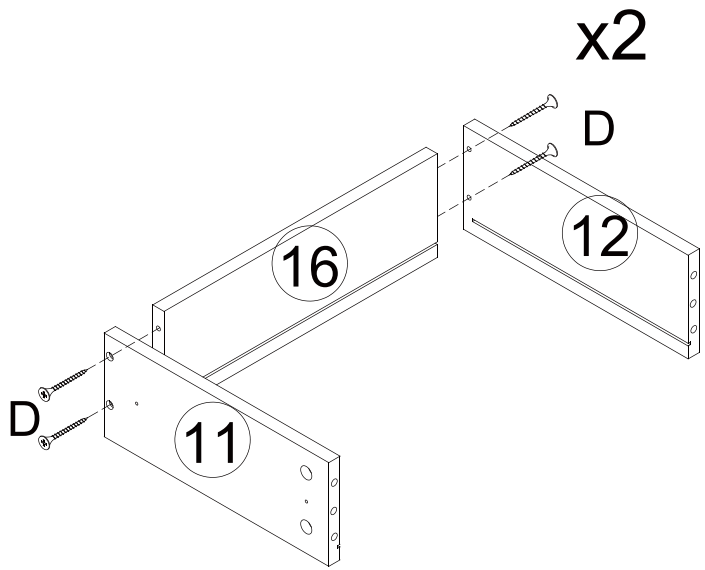

ASSEMBLY INSTRUCTION

STEP 15

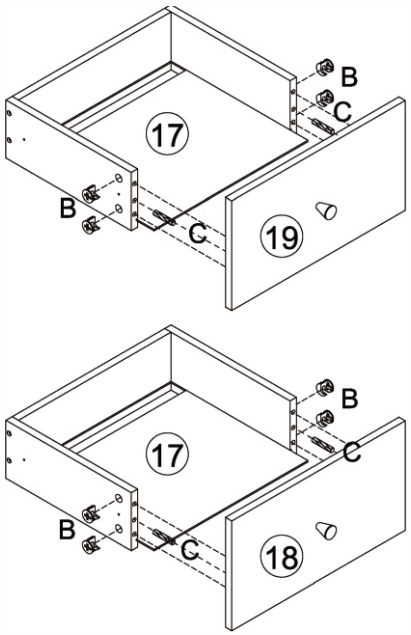

STEP 16

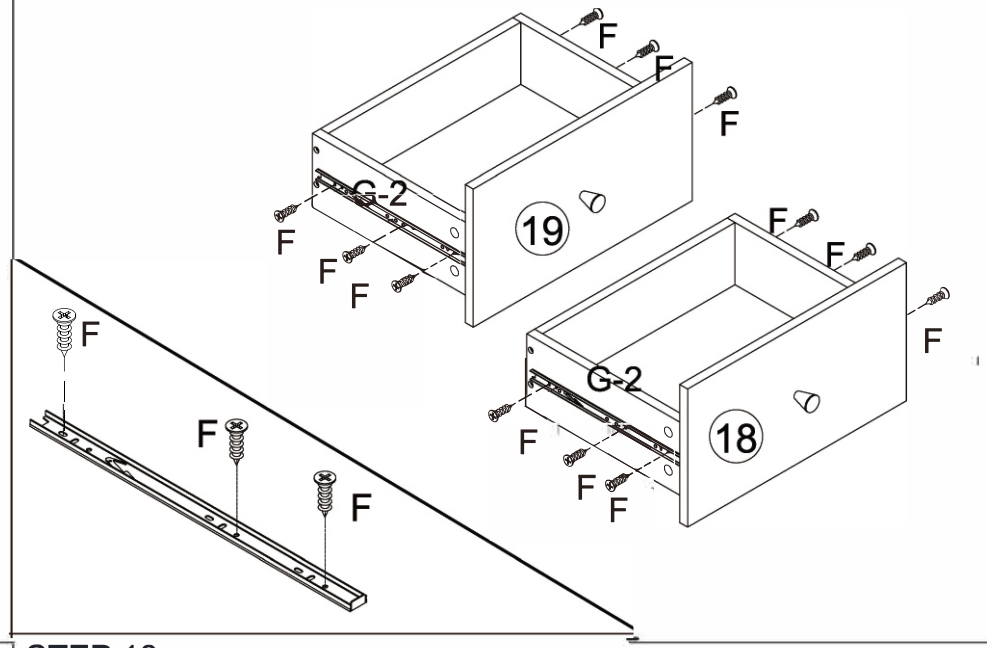

STEP 17

x2

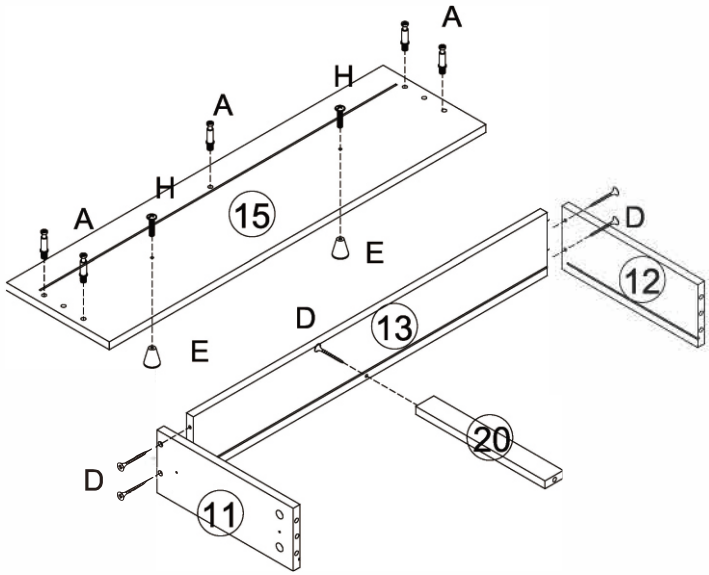

STEP 18

x2

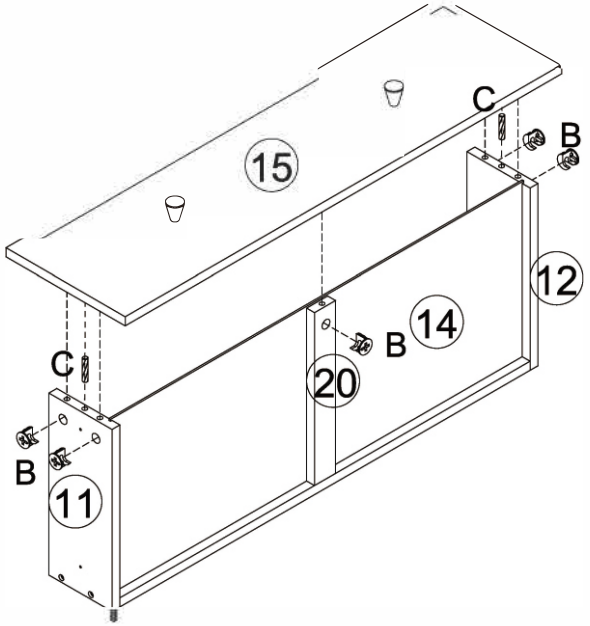

ASSEMBLY INSTRUCTION

STEP 19

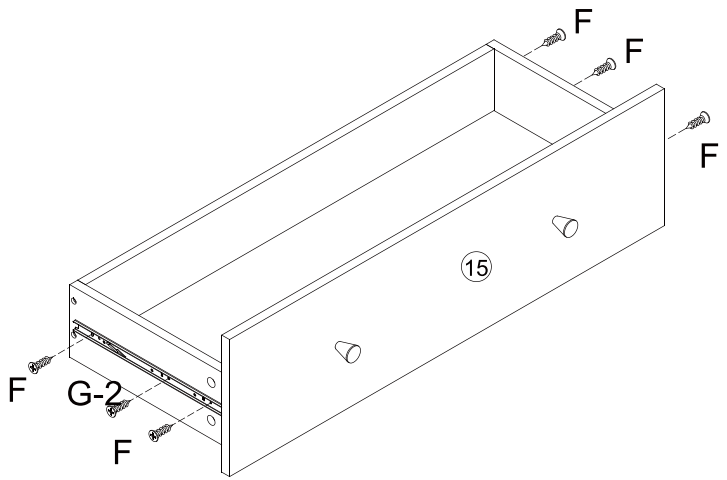

x2

STEP 20

