Installation User Manual

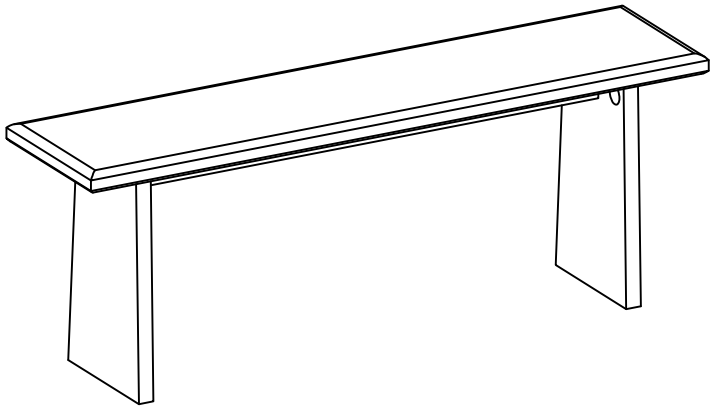

Thank you for purchasing our product.
Please read this manual carefully before use.

01 PARTS DISPLAY

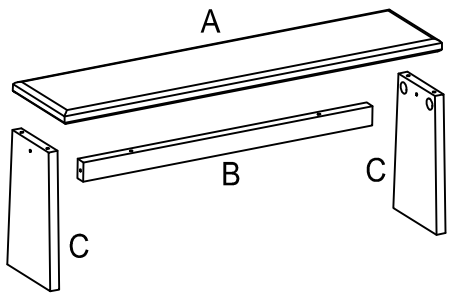

① ×4	
② ×4	③ ×4
④ ×4	⑤ ×4
⑥ ×1	⑦ ×1

02 INSTALLATION STEPS

STEP 1

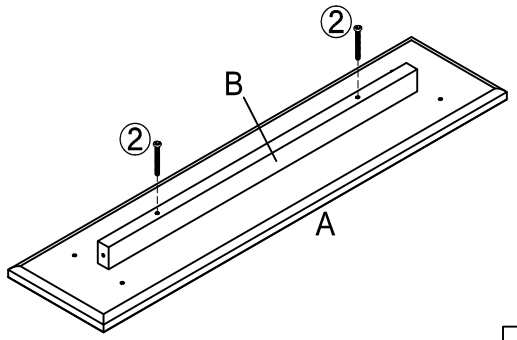

② ×2

STEP 2

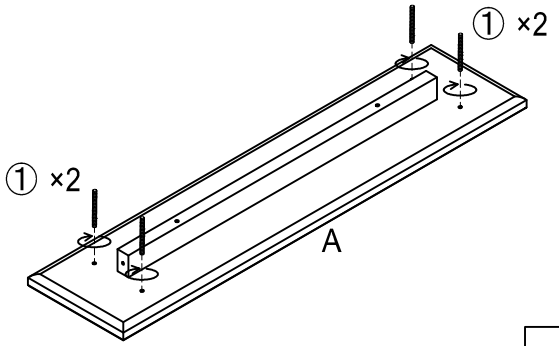

① ×4

STEP 3

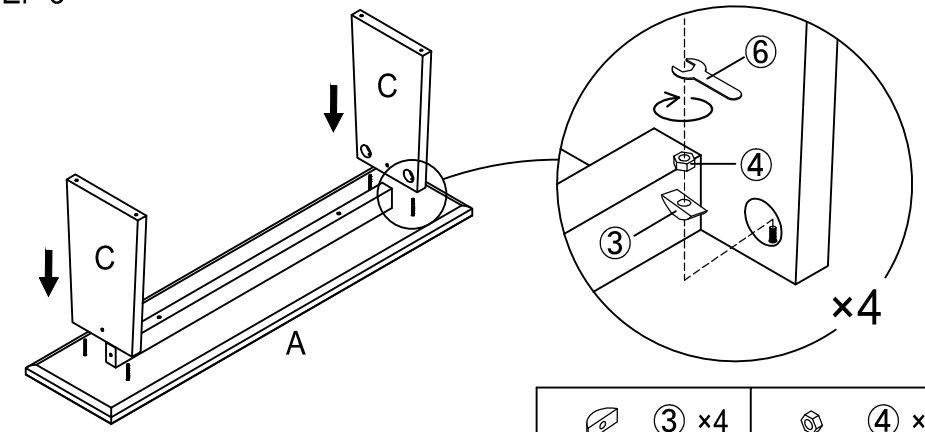

③ ×4 ④ ×4

STEP 4

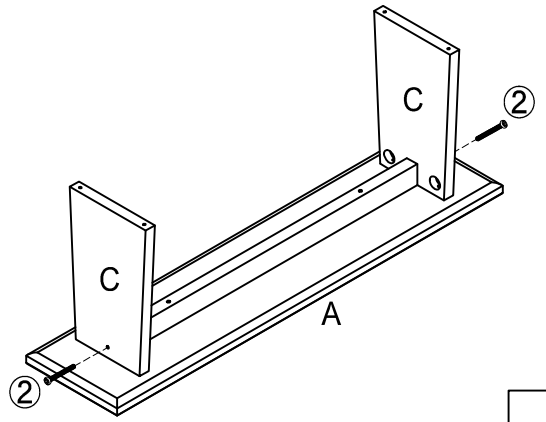

② ×2

STEP 5

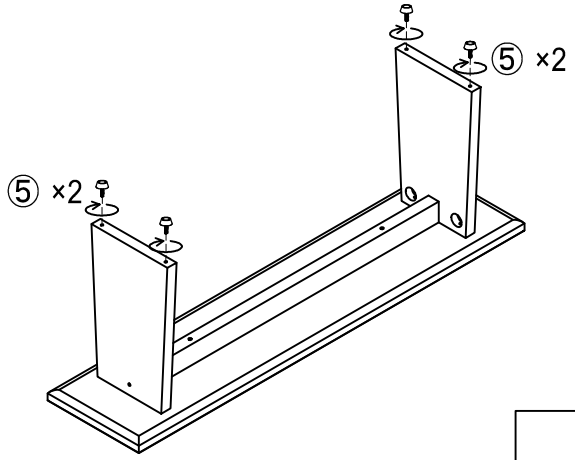

⑤ ×4