ASSEMBLY INSTRUCTIONS
24 INCH BATH VANITY-CABINET

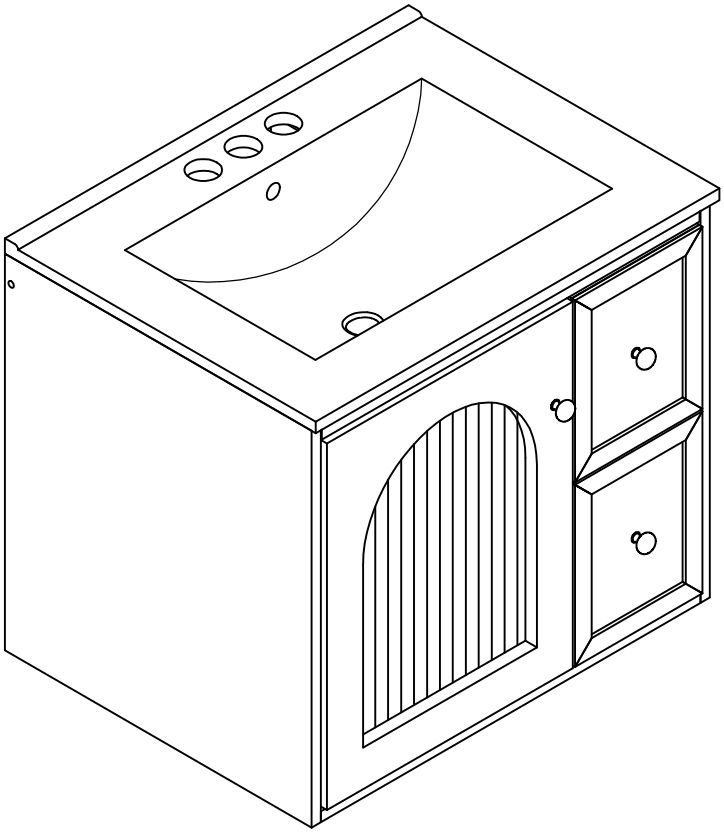

Thank you for purchasing this quality product. Be sure to check all packing material carefully for small parts which may have come loose inside the carton during shipment. Separate, identify and count all parts and hardware. Compare with the parts list to be sure all parts are present.
"DO NOT TIGHTEN SCREWS UNTIL COMPLETELY ASSEMBLED"

*** Use of power tool to assemble this product will invalidate any claim and damage this product making unsafe !!!**
*** Please assemble on a clean soft surface to avoid damage.**

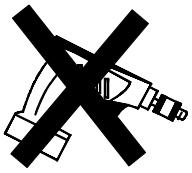

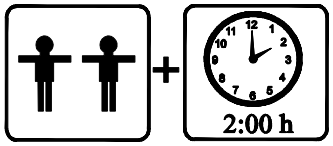

Tools Required

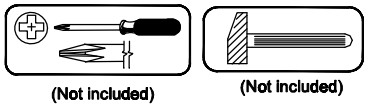

IMPORTANT:

PLEASE READ INSTRUCTION BEFORE STARTING THE ASSEMBLY

PLEASE DO NOT RETURN TO STORE

Please do not return this product to the retailer!!
We are able to assist you in ANY way

If you find that you have any trouble with assembly or missing or damaged parts please contact the seller.

Before Installation

Important – Please read these instructions fully before starting assembly

Thank you for purchasing this quality product. Be sure to check all packing materials carefully for small parts, which may have come loose inside the carton during shipment. Identify and count all items according to the PARTS LIST and/or HARDWARE LIST shown below. Check you have all the components and tools listed on the following pages.

- We recommend that you assemble this product with the assistance of another person; this will make the assembly easier, and will help eliminate damage to the product or injury to persons during assembly.
- Please do not over tighten screws or bolts until the assembly is completed.
- Keep children and animal away from the work area, small parts could choke if swallowed.
- Please put all parts on a non-abrasive floor before assembly,and follow the assembly steps to assemble your newly purchased product correctly and efficently.

Cam Lock Assembly Instructions

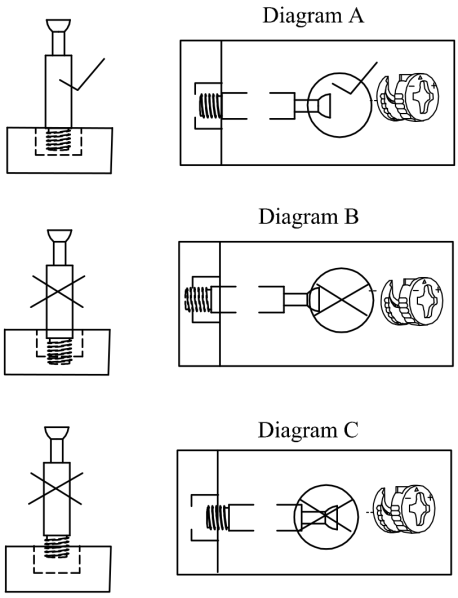

Insert Cam Bolt into hole as shown in diagram A.

Make sure not to insert the Cam Bolt:
Too deep as shown in figure B as this will cause the Cam Lock to be misaligned and unable to interlock properly.

Also avoid inserting the Cam Bolt too close to the surface of the hole as shown in figure C, as this will cause the Cam Lock to be too loose, and not interlock properly.

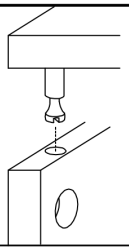

Connect the panels together.

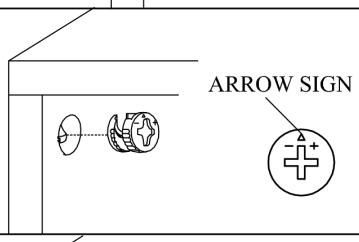

Insert the Cam Lock so the side opening fits over the head of the Cam Bolt.

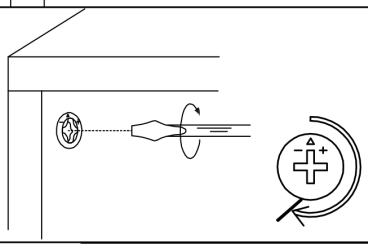

To tighten the Cam Lock, turn it clockwise on half a turn with a flat screwdriver.
**Do not use an automatic screwdriver as it may bend or break if too much power is imposed.*

Detail View - CABINET

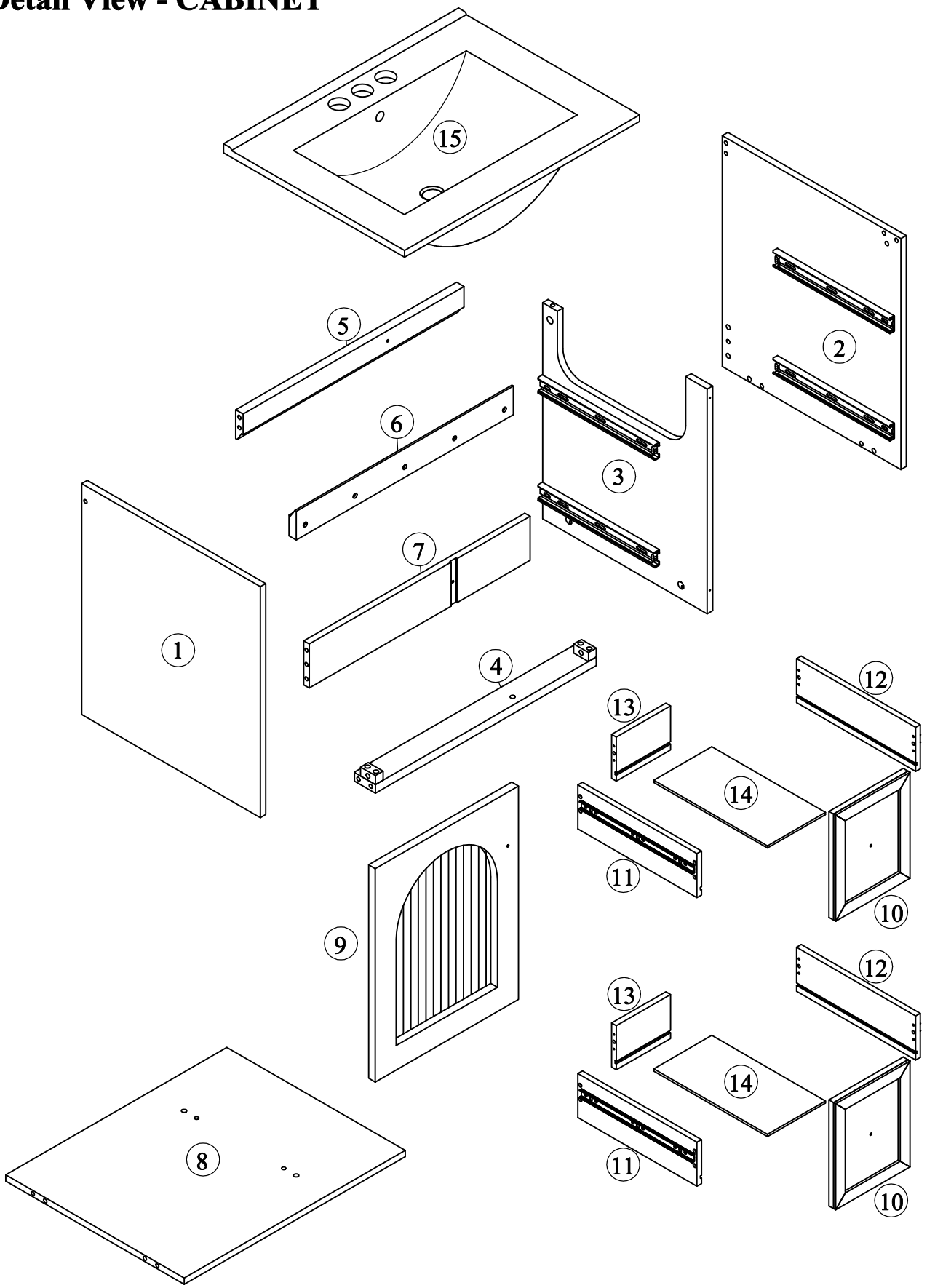

Identifying the Hardware-Identify the hardware using the illustrations below.

Part List

1 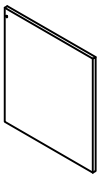 Side Panel (L) - 1pc	2 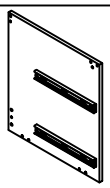 Side Panel (R) - 1pc
3 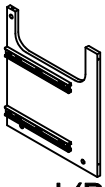 Side Panel (B) - 1pc	4 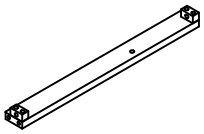 Top Panel Rear - 1pc
5 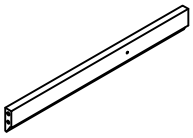 Mid Panel Rear - 1pc	6 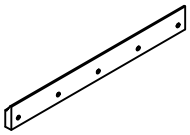 Mid Panel Rear - 1pc
7 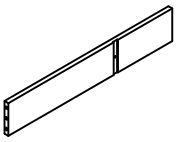 Bottom Panel Rear - 1pc	8 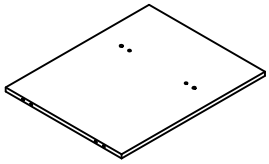 Bottom Panel - 1pc
9 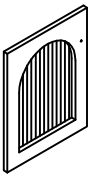 Drawer Face - 1pc	10 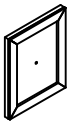 Drawer Face - 2pcs
11 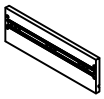 Drawer Side Panel (L) - 2pcs	12 Drawer Side Panel (R) - 2pcs
13 Drawer Back Panel - 2pcs	14 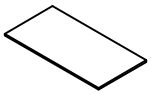 Bottom Drawer Panel - 2pcs
15 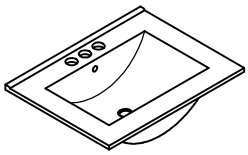 Sink - 1pc	

Hardware List

A ø6x35mm	B ø14.5x12mm	C ø8xø4x25mm
Three in one bolts (11pcs)	Three in one lock (11pcs)	Round head screw(2pcs)
D ø35mm	E ø7xø3.5x12mm	F ø8x30mm
Damping hinge (2pcs)	Flat head screw (12pcs)	Wood dowel(14pcs)
G ø6x30mm	H ø8xø4x32mm	I ø25x25mm
Wood dowel(8pcs)	Flat head screw (16pcs)	Handle (3pcs)
J ø5/32"x18mm	K ø5/32"x22mm	L ø10xø5x55mm
Handle screw (2pcs)	Handle screw (1pcs)	Flat head screw (5pcs)
M ø1/4"x50mm	N ø1/4x10x13mm	O ø1/4"x28mm
Hex-Head bolts(2pcs)	Horizontal-Hole bolts(2pcs)	Hex-Head bolts(2pcs)
P ø1/4"x16x1mm	Q 4mm	R ø12x55mm
Washer (2pcs)	Allen key(1pc)	Plastic stopper - 5pcs

STEP: 1

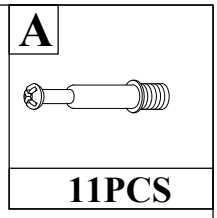

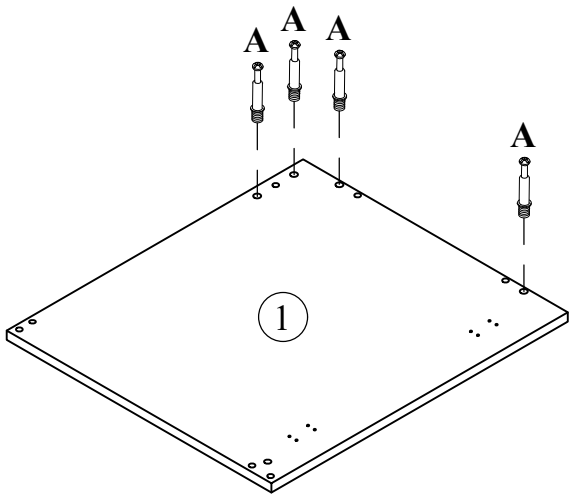

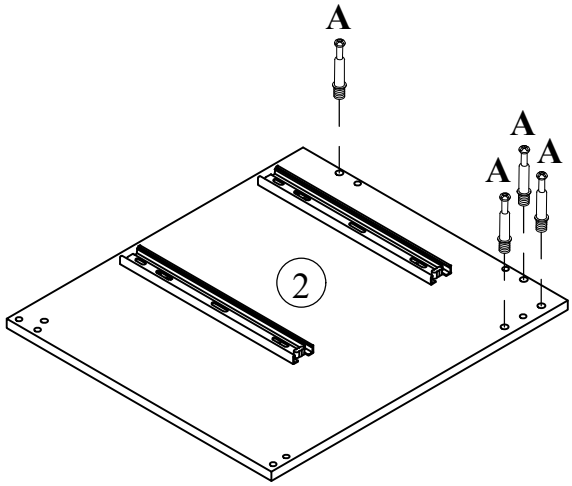

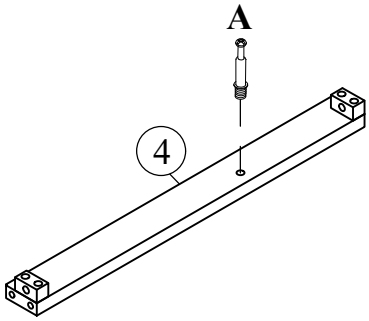

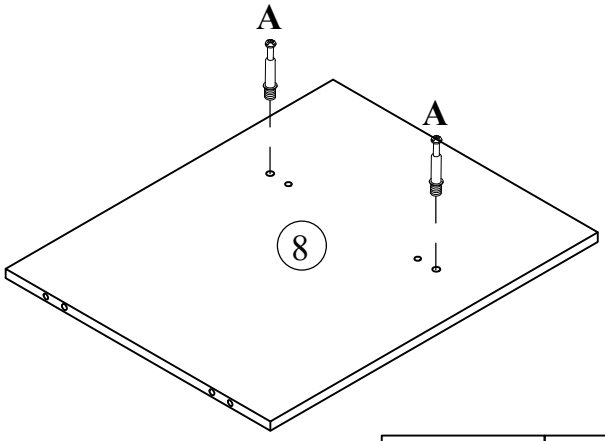

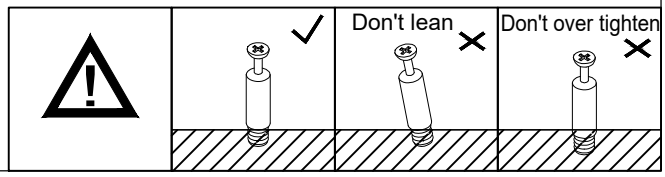

STEP: 2

B	C	F
7PCS	2PCS	8PCS

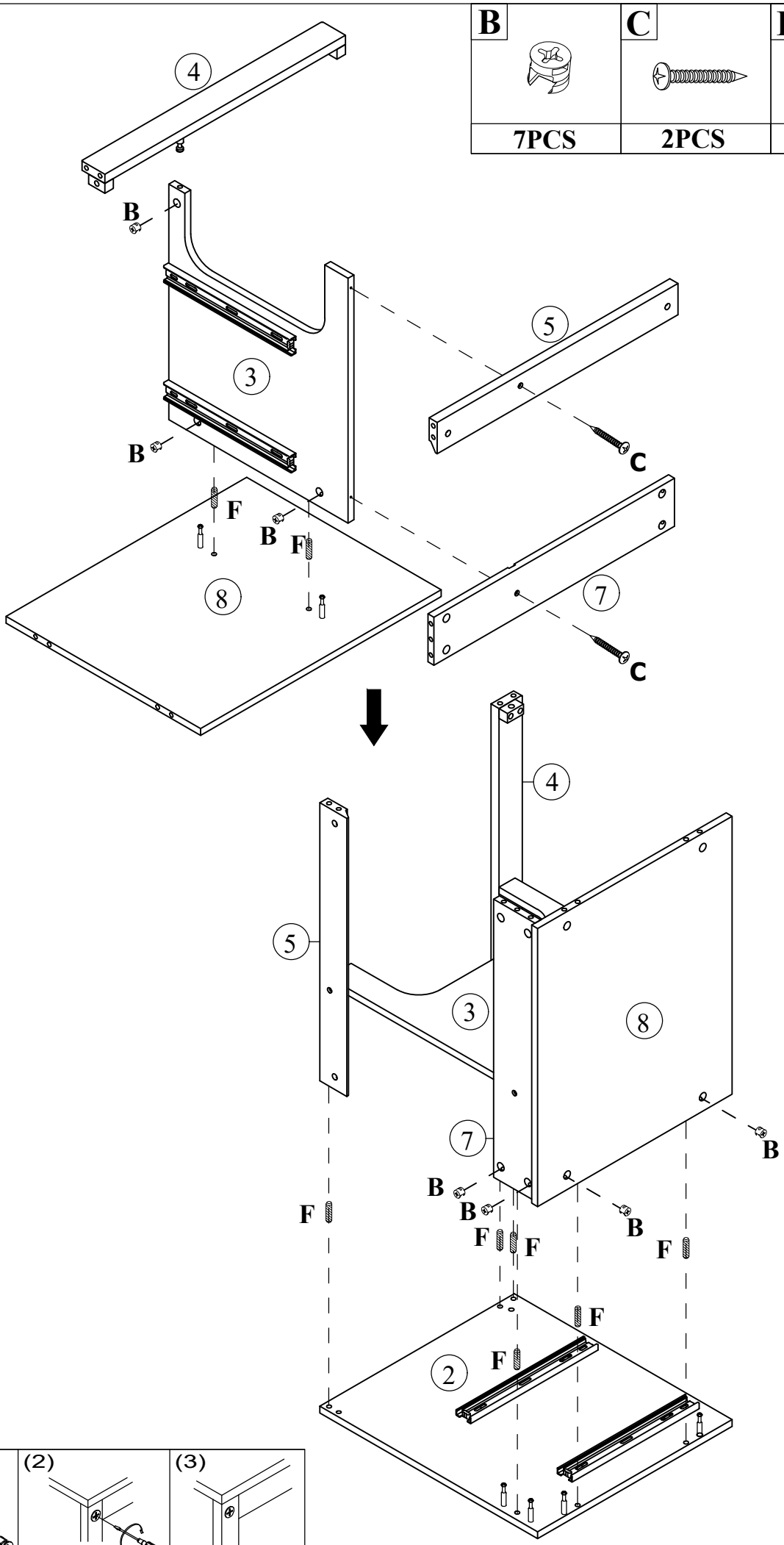

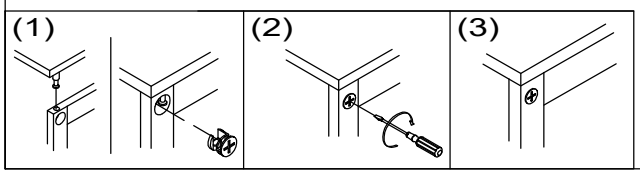

STEP: 3

B	F	M	N	O	P
4PCS	6PCS	2PCS	2PCS	2PCS	2PCS

Q
1PC

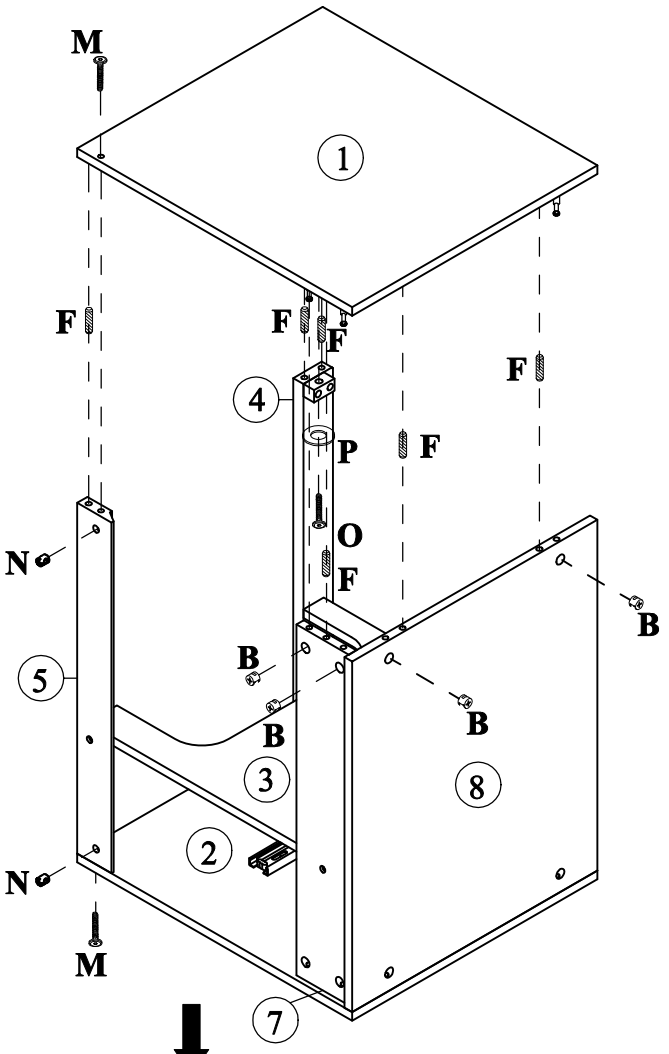

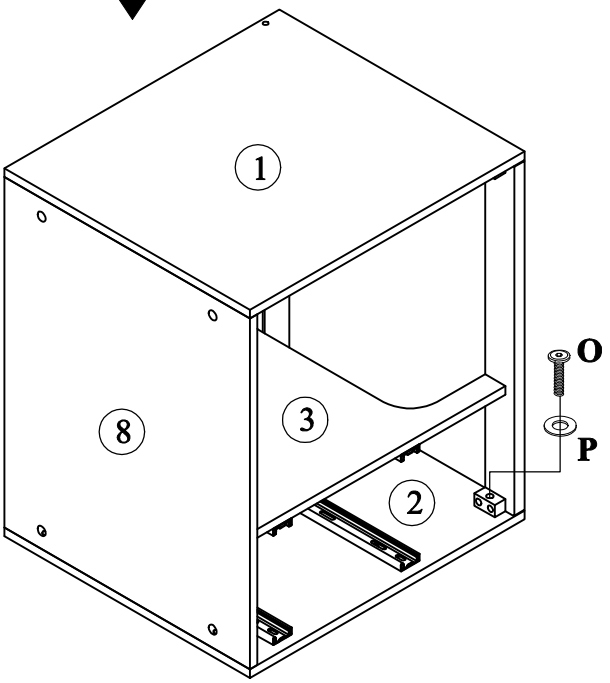

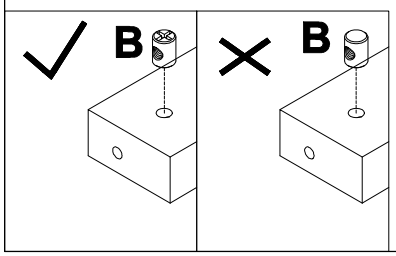

STEP: 4

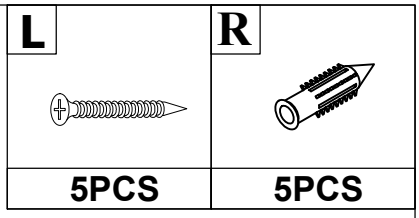

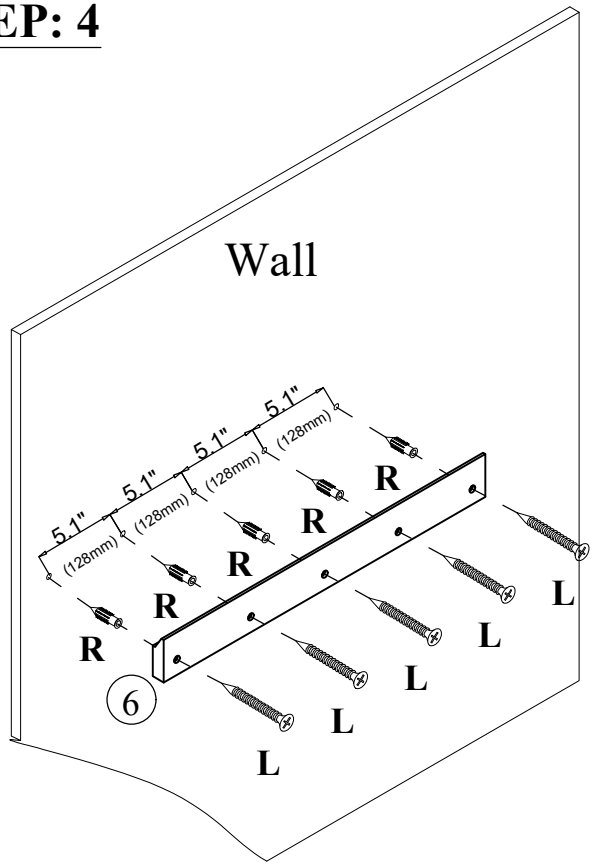

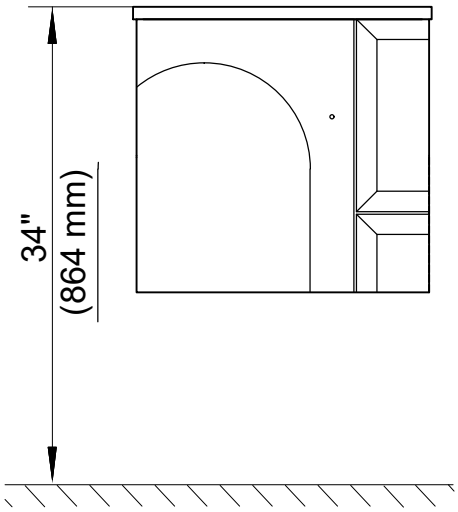

Draw the spacing between the walls and the No.5, punch holes in the wall, and fix the No.5 to the wall with screws.
Note: Appropriate distance from the top of sink to the ground is 34".

STEP: 5

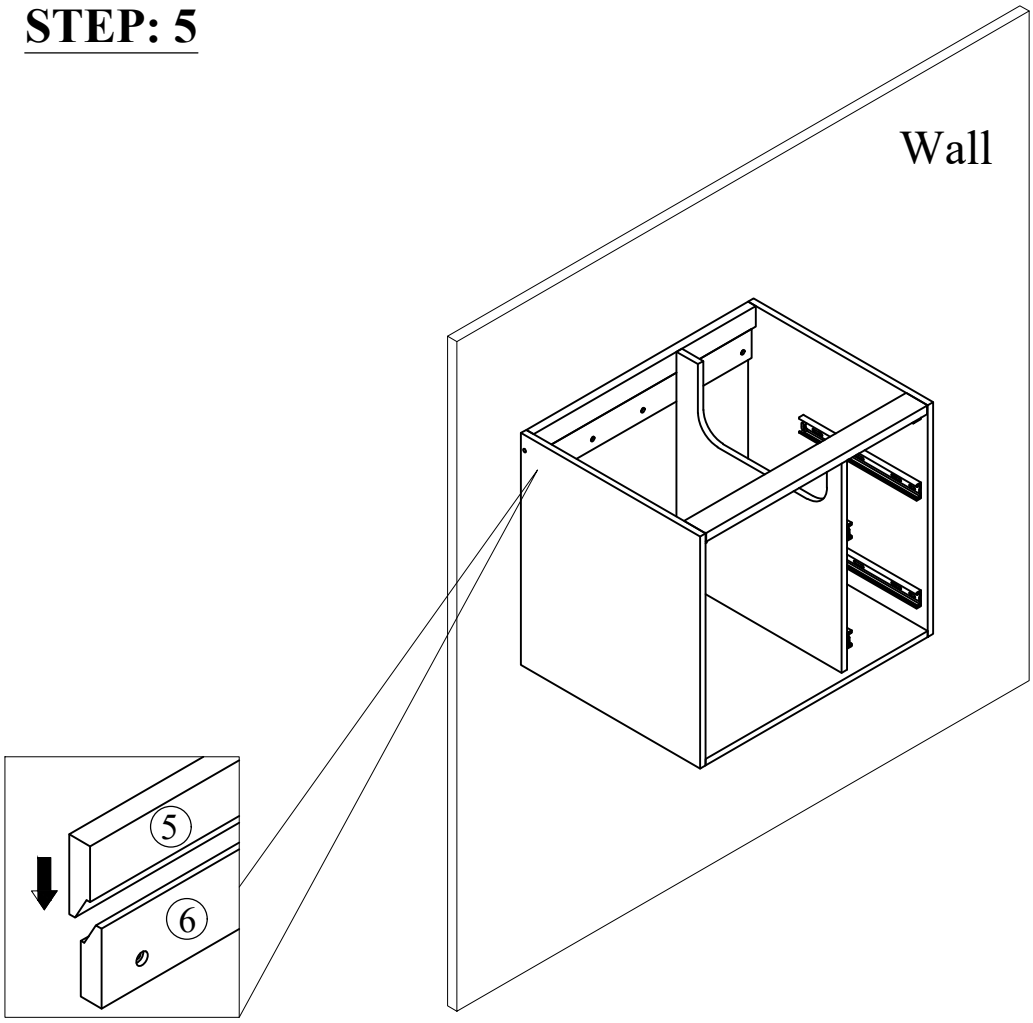

STEP: 6

E	D
4PCS	2PCS

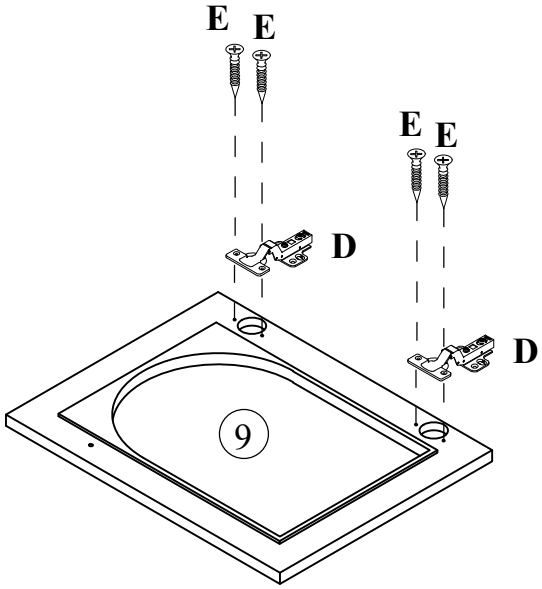

STEP: 7

K	E
1PC	8PCS

I
1PC

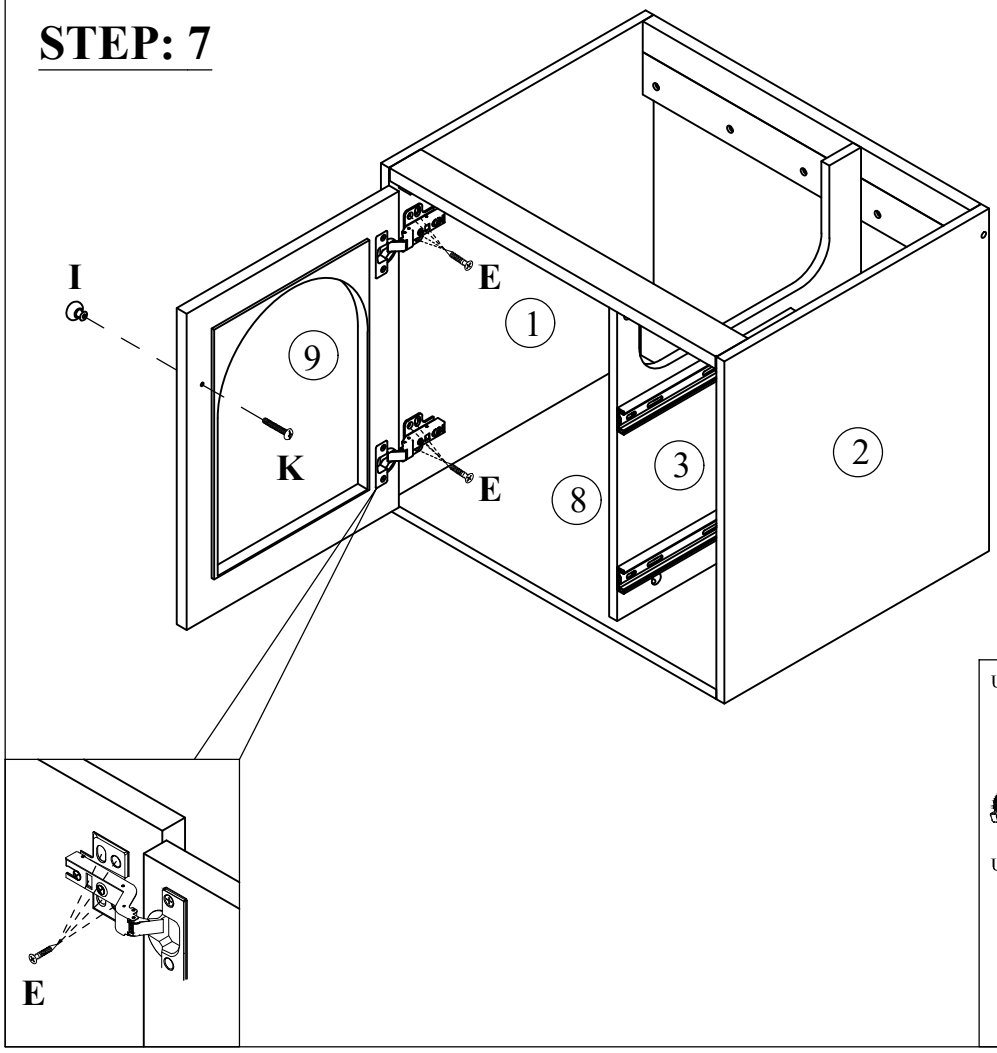

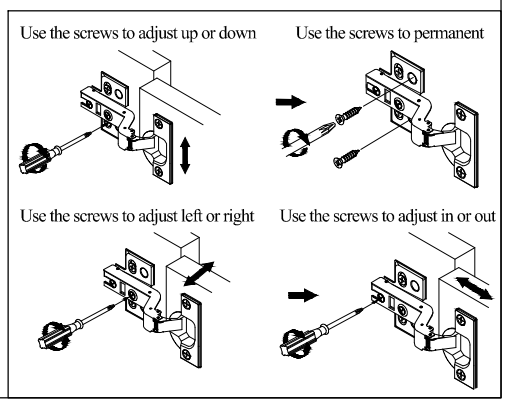

STEP: 8

G	H	J	I
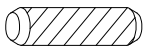	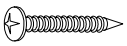	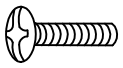	
8PCS	16PCS	2PCS	2PCS

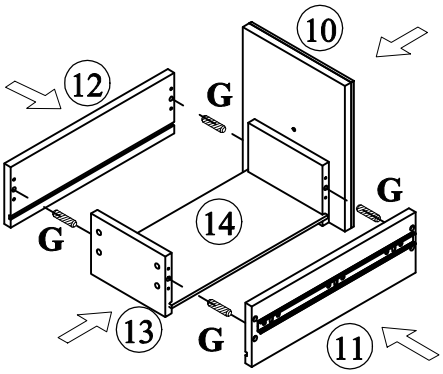

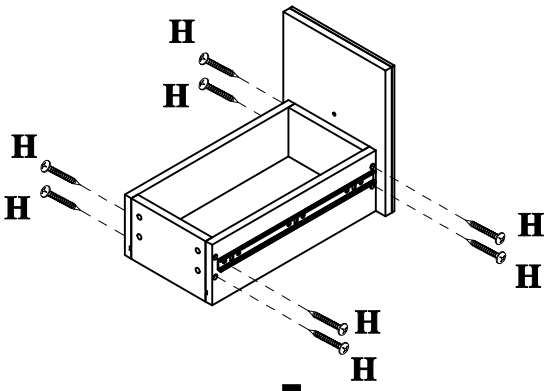

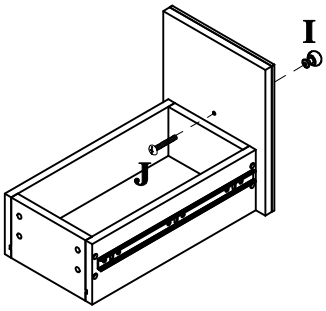

x2

STEP: 9

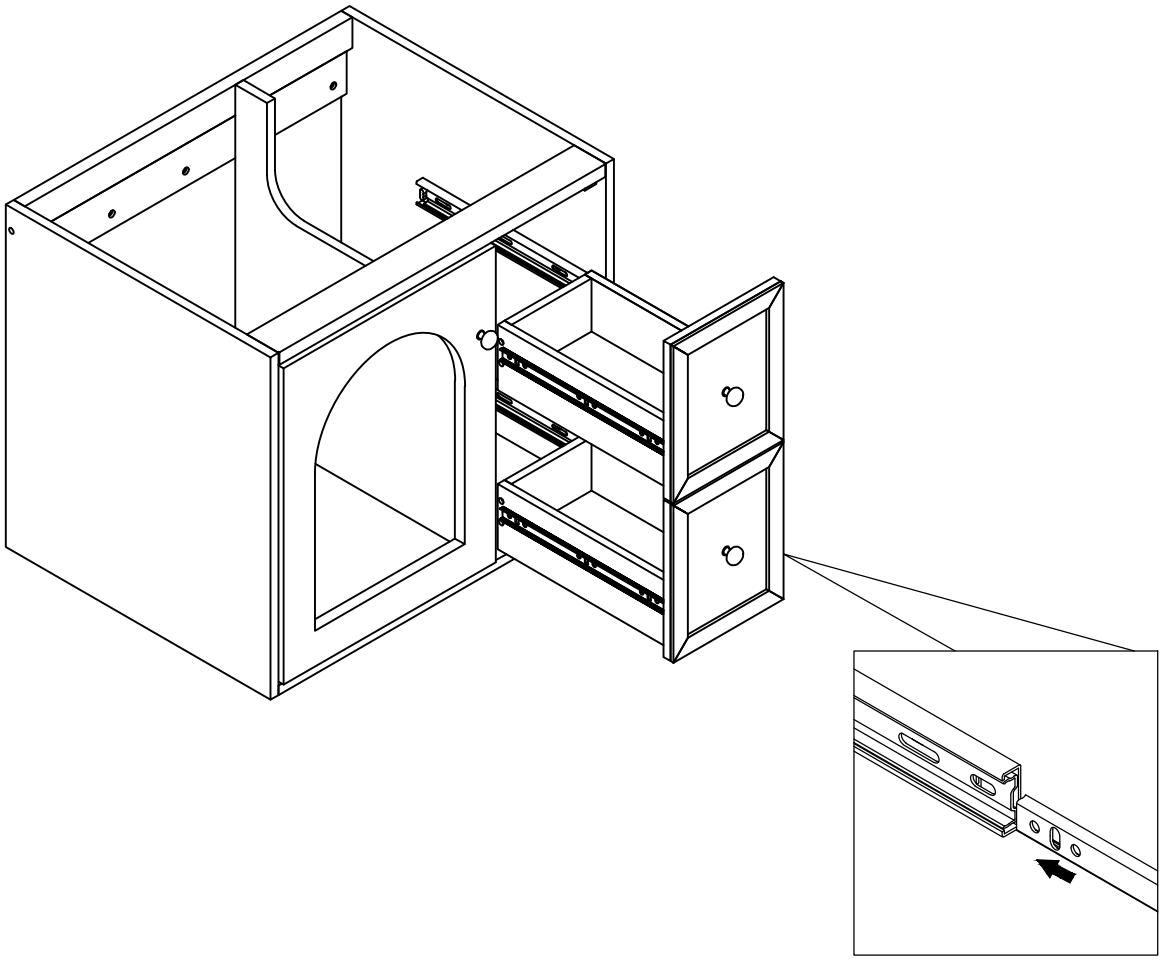

STEP: 10

Install the sink on the cabinet with glue.
Let stand for 24 hours

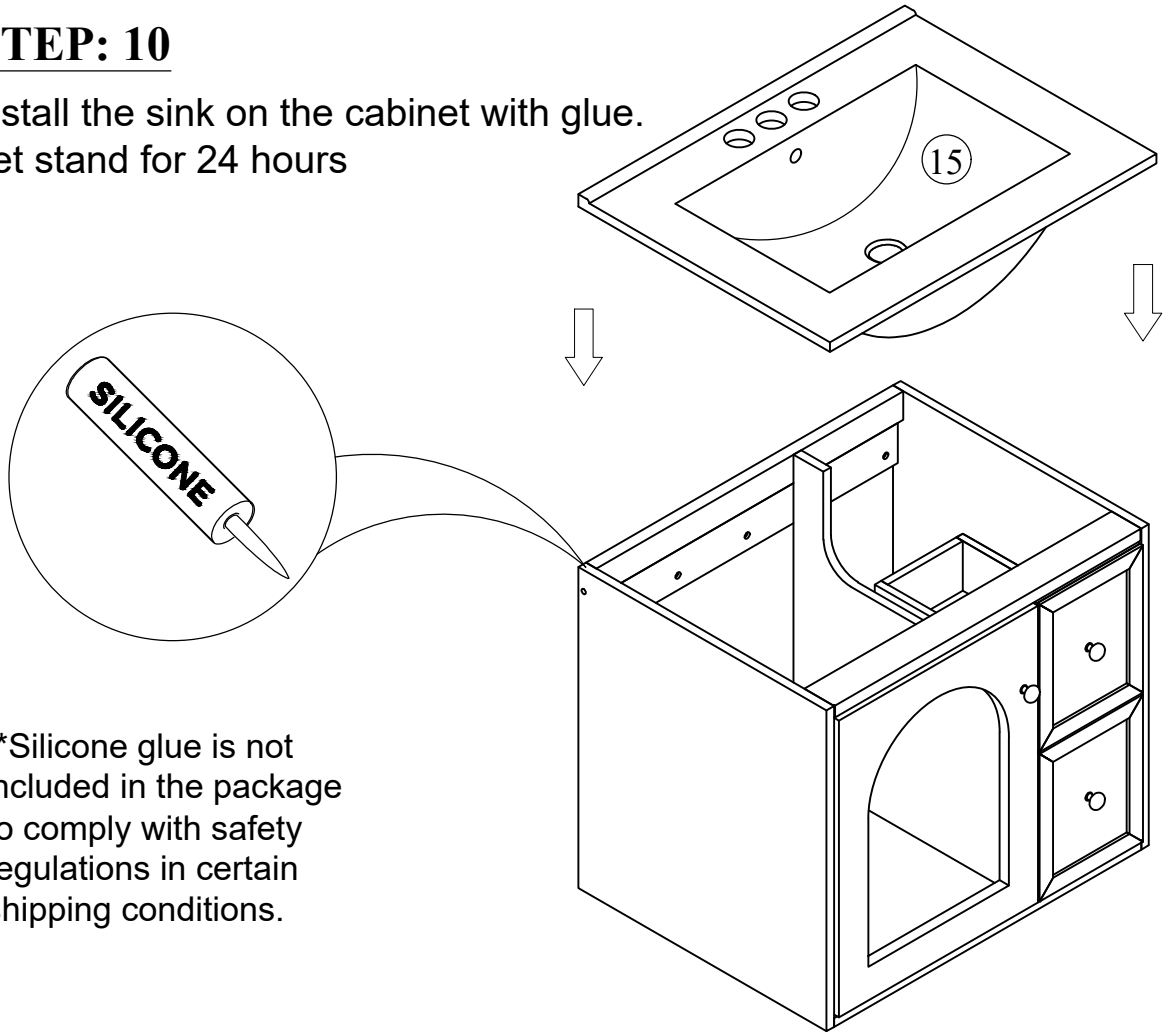

*Silicone glue is not included in the package to comply with safety regulations in certain shipping conditions.

STEP: 11

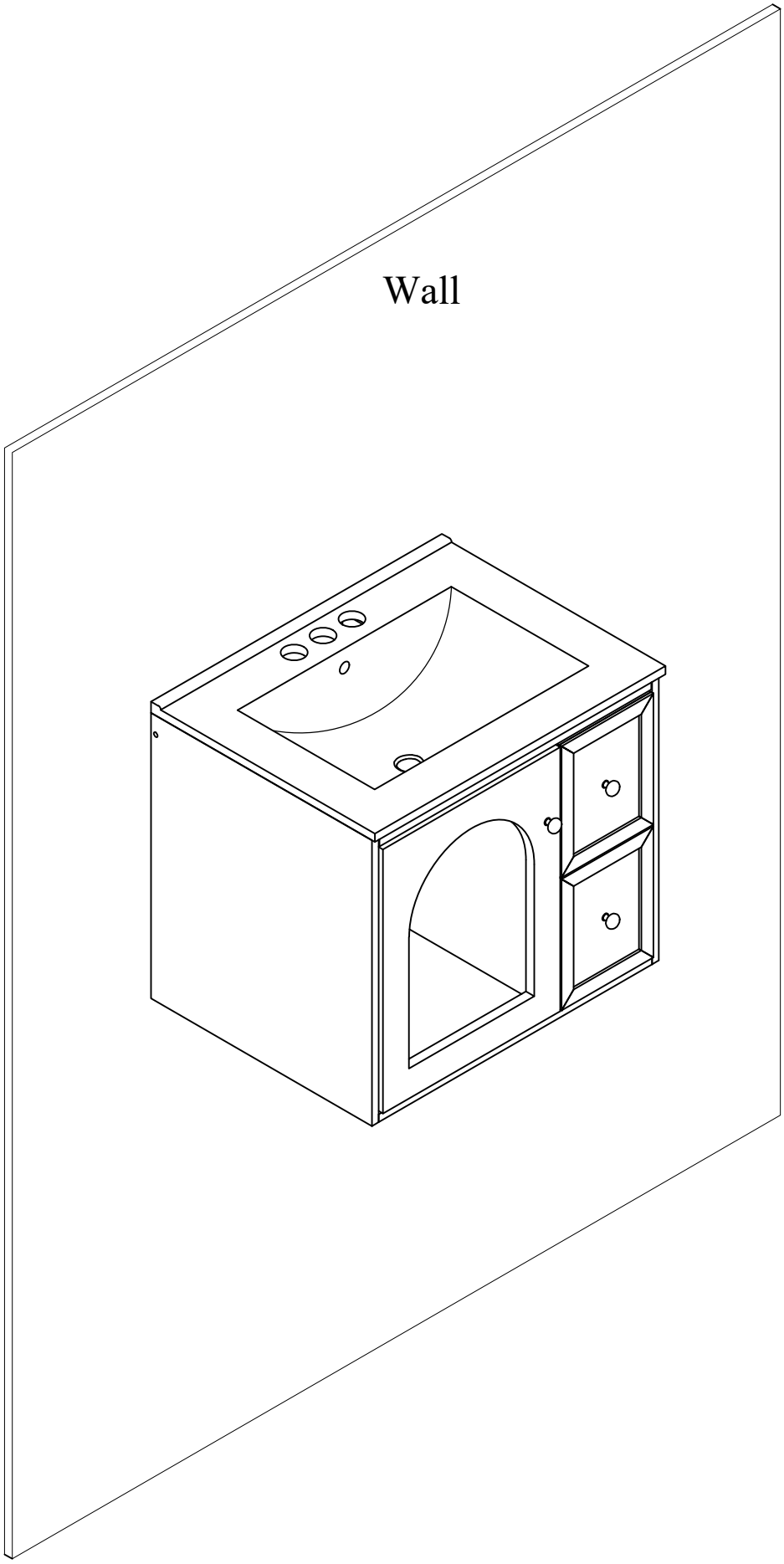

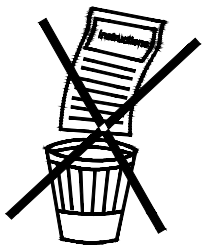

HINGE ADJUSTMENTS

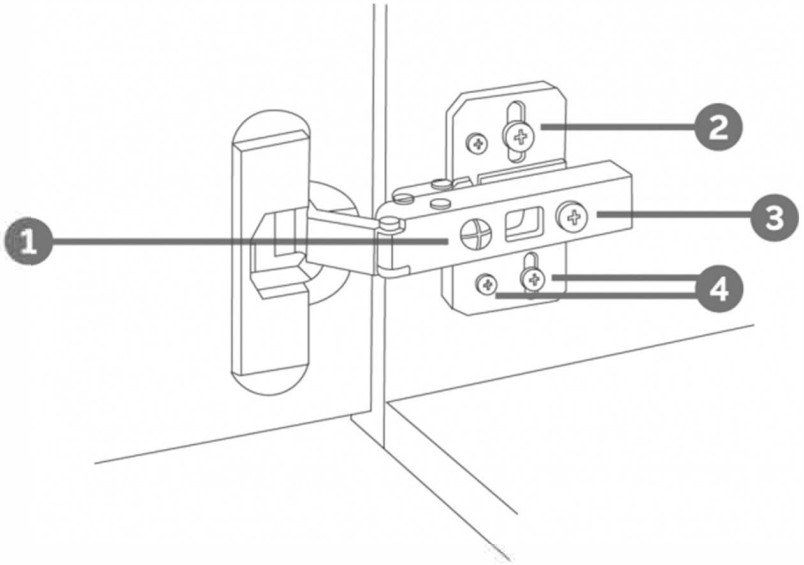

1 Sideways / Tilt adjustment

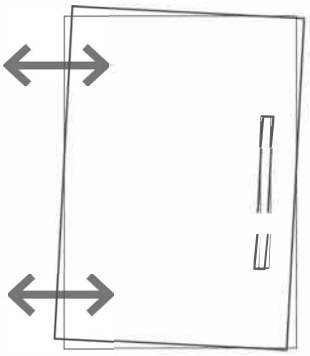

Turn the screw
clockwise to move the door further away from the side of the cabinet
anticlockwise to move the door closer to the side of the cabinet

2 4 Height adjustment

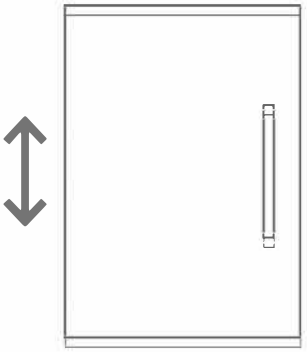

While supporting the weight of the door, turn the screws
clockwise to move the door up
anticlockwise to move the door down

3 Forward and back adjustment

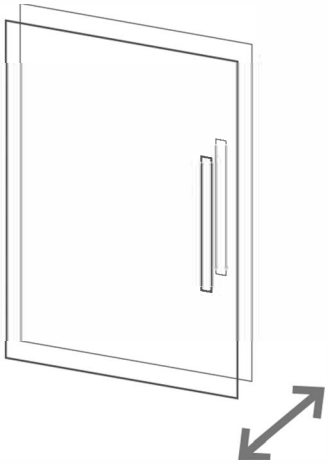

If the gap between the back of the door and the cabinet is too small, and the door may not close fully. Turn the screw
clockwise to decrease the gap between the door and the cabinet
anticlockwise to increase the gap between the door and the cabinet