Rivage

Farmhouse Kitchen Sink

SM-KS759G

Features:

- Durable, 18G stainless steel
- 16G Apron
- Easy-to-clean, R10 corners
- Sound absorbing pads
- Cross breaks for complete drainage
- 10” Basin depth

Installation:

- Farmhouse

Colors & Finishes:

- Stainless Steel: SM-KS759
- Black: SM-KS759B
- Gold: SM-KS759G
- Rose Gold: SM-KS759RG

Specifications:

- N.W: 35.27 lb.
- L: 30” x W: 21” x H: 10”

Included Parts:

- Farmhouse Sink: SM-KS759G

Compatible Parts (sold separately):

- Swiss Madison Bottom Grid: SM-KS759-G
- Swiss Madison Roll-Up Grid*
- Swiss Madison Kitchen Sink Drain*
- Swiss Madison Kitchen Sink Faucet*
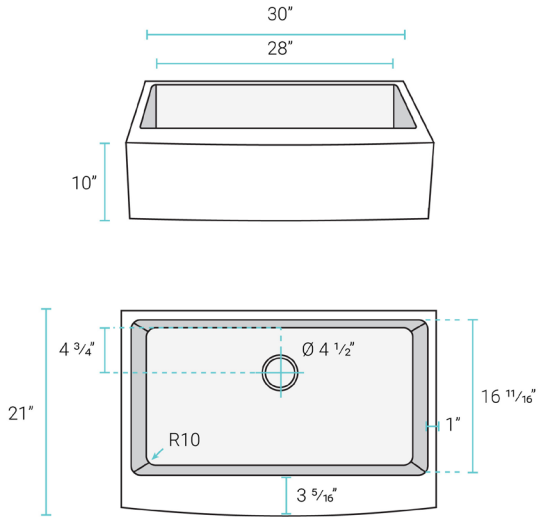
* Color & style options available