ASSEMBLY INSTRUCTIONS

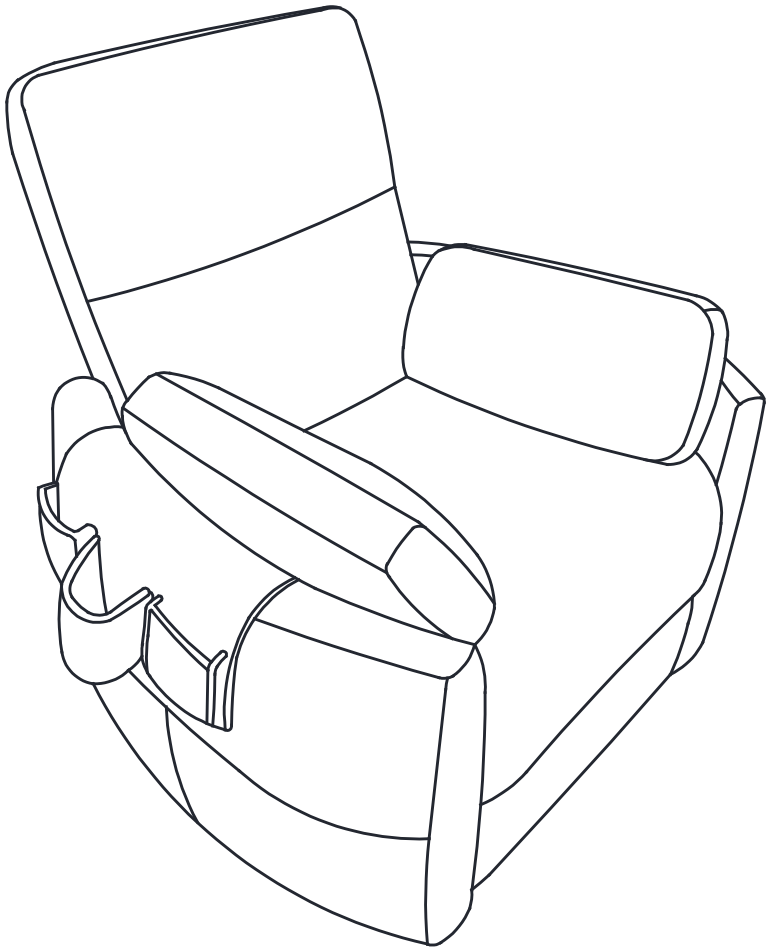



2 - People

ASSEMBLY RATING



EASY ⟶ DIFFICULT

The Assembly Rating is a 5-point system showing the level of effort needed to assemble a specific product.

CHECK BEFORE STARTING

- [ ] **Are you missing anything?**

  Double-check all parts, hardware and accessories listed are all acccounted for.

- [ ] **Should we send any replacements?**

  Are there any irregularities or flaws in the parts? We can send replacements!

- [ ] **Check out our Quick Tips!**

  We recommend reviewing the pre-assembly handouts. Even experts need a refresher now and then!

- [ ] **Prep Time!**

  Please review the assembly instructions and all diagrams prior to assembling.

PRE ASSEMBLY INTRODUCTION

We understand building ready-to-assemble furniture can be a challenging experience for some. To help avoid confusion, we have provided some helpful tips that may speed up the process.

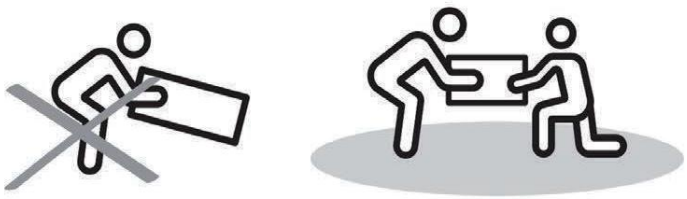

Teamwork

ALWAYS have at least two people to help with transporting and assembling the product to avoid potential injury and/or damage.

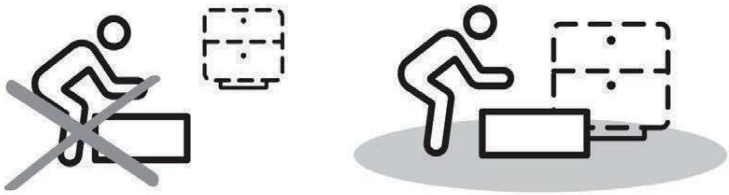

Suitable Location

Assembling near the area of the intended location is highly recommended.



Sufficient Space

Make sure you have enough space to move around during the assembly.

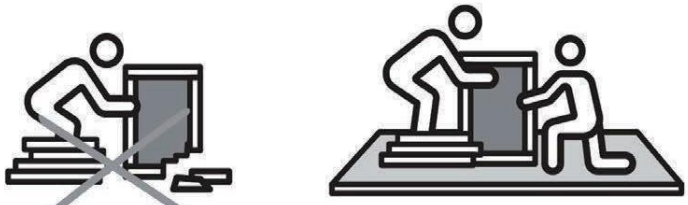

Avoid Scratches

Use cardboard, blankets or a carpeted area while assembling furniture to prevent scratches and damages.

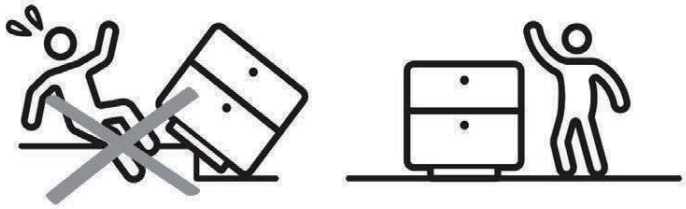

Flat Surface

Make sure the furniture rests on a flat and level surface with each leg evenly touching the floor.

ASSEMBLY AND CARE ADVICE

FAILURE TO FOLLOW THE GUIDELINES BELOW MAY RESULT IN INJURY AND/OR PROPERTY DAMAGE.



Position each part correctly and insert screws or bolts into their respective holes.

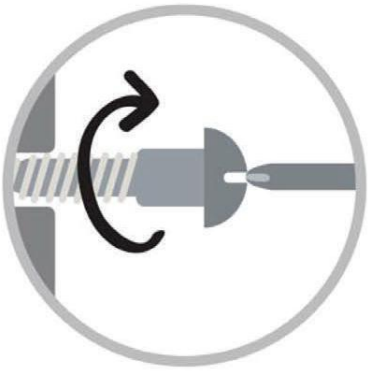

Turn clockwise to tighten and only tighten when step is completed or when instructed to do so.



Use the appropriate hand tools or power tools for assembly. Select steps, such as tightening screws and/or bolts, may require hand tools to avoid causing damage during assembly.



Save the instructions and store any supplied tools for later maintenance.

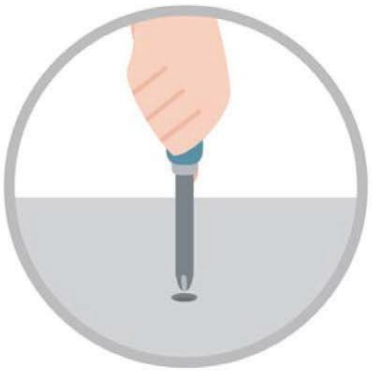

After two weeks, check and tighten any loose hardware and repeat again every six months thereafter.

IT IS THE USER'S RESPONSIBILITY TO MAINTAIN THE FURNITURE. THE HARDWARE MAY LOOSEN OVER TIME AND MAY CAUSE THE FURNITURE TO BE WOBBLY AND UNABLE TO SUPPORT ITS INTENDED WEIGHT CAPACITY. THIS MAY LEAD TO COLLAPSE AND MAY CAUSE SERIOUS INJURY.

PRODUCT TYPE

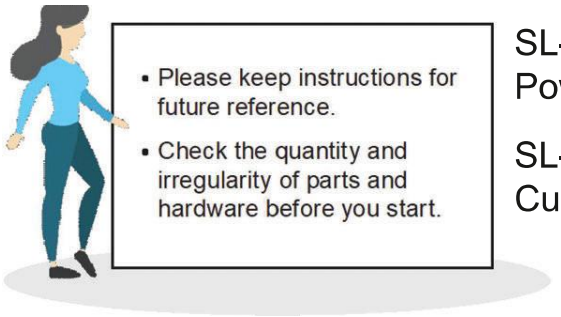

SL-AC8039-PM-1
Power Recliner Backrest And Seat, Two Pillows

SL-AC8039-PM-2
Cup & Phone Pocket

PARTS

01

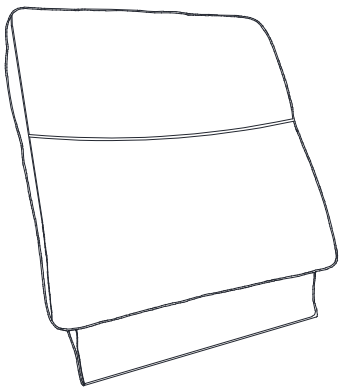

Backrest
1 pc.

02

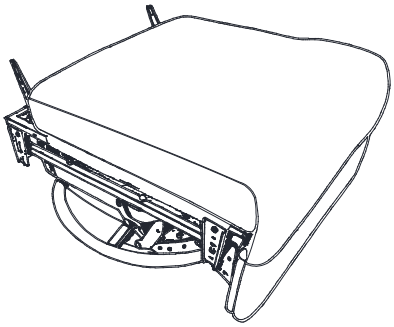

Seat Cushion
1 pc.

03

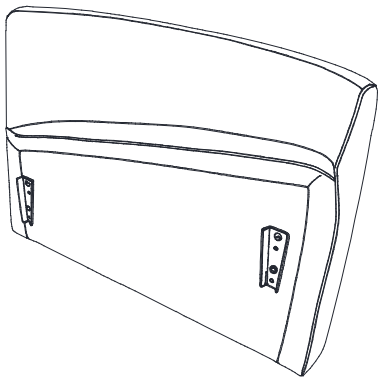

Left Armrest
1 pc.

04

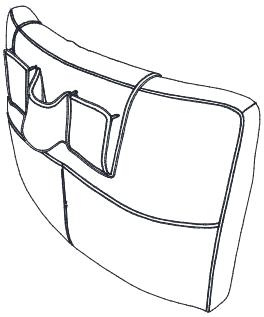

Right Armrest
1 pc.

05

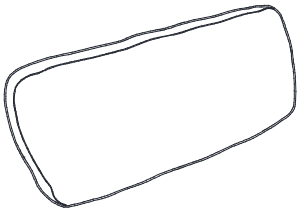

Pillow
2 pc.

Carton	Designation	Part		Hardware
SL-AC8039PM-1	Backrest 1pc	01	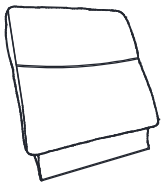	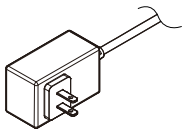 Power Supply 1 pc.
	Seat Cushion 1pc	02	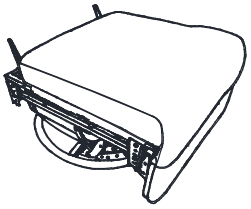	
	Pillow 2pc	05		
SL-AC8039PM-2	Left Armrest 1pc	03	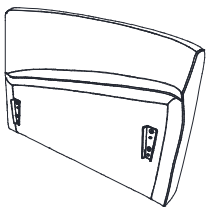	
	Right Armrest 1pc	04	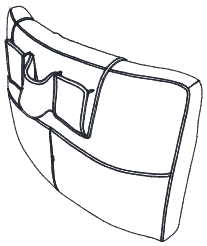	

ASSEMBLY INSTRUCTIONS

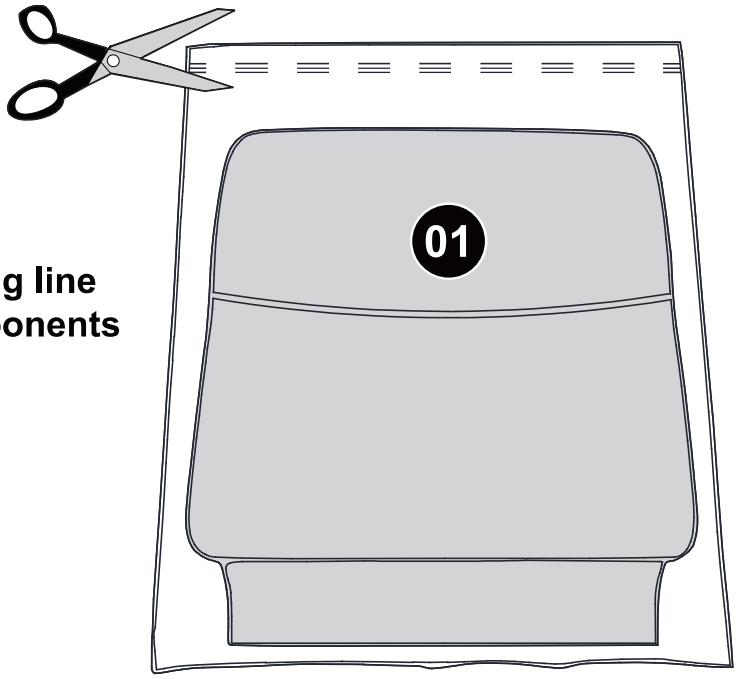

Cut along this sealing line to take out the components inside the bag.

WARNING
TO AVOID DANGER OF SUFFOCATION,
KEEP THIS BAG AWAY FROM BABIES AND CHILDREN.
DO NOT USE IN CRIBS,BEDS,CARRIAGES OR PLAYPENS.
THIS BAG IS NOT A TOY.DISCARD BAG AND ANY OTHER PACKING MATERIALS IMMEDIATELY AFTER REMOVING PRODUCT.
DO NOT RE-USE THIS BAG.

ADVERTENCIA
PARA EVITAR RIESGO DE SOFOCACION
MANTENGA ESTA BOLSA ALEJADA DE BEBES YNINOS. NO USE EN CUNAS.CAMAS.CARRIOLAS O CORRALITOS
ESTA BOLSA NO ES UN JUGUETE.
TIRE LA BOLSA Y LOS OTROS MATERIALES DE EMPAQUE IMMEDIATAMENTE
NO RE-USE ÉSTA BOLSA.




Raccolta Plastica Raccolta differenziata Verifica le disposizioni del tuo Comune








ASSEMBLY INSTRUCTIONS

1

Open the box tied with a red ribbon and take out the power supply inside.

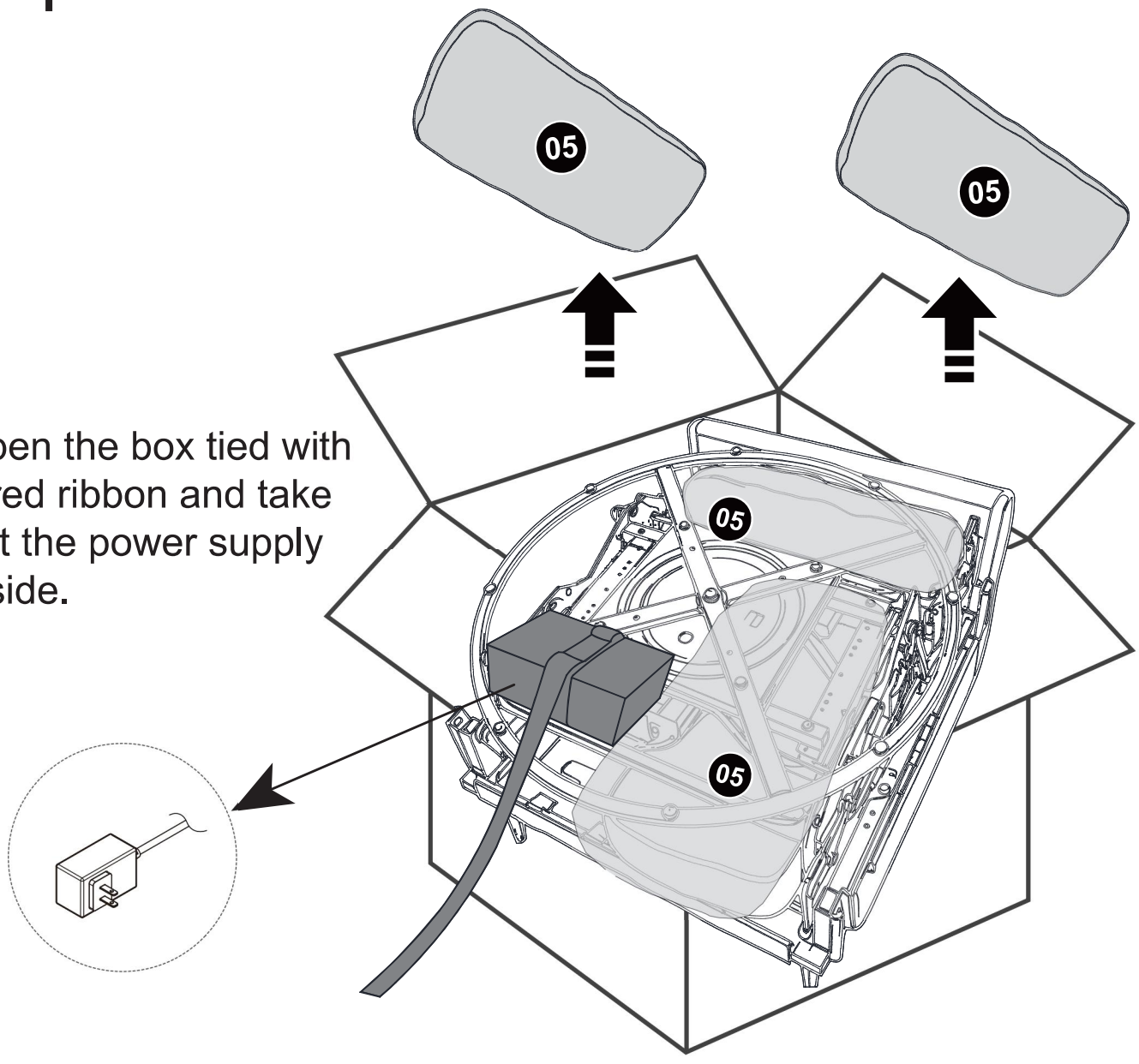

The two pillows cushions are located in the gap between the swivel base and the seat cushion.

ASSEMBLY INSTRUCTIONS

2

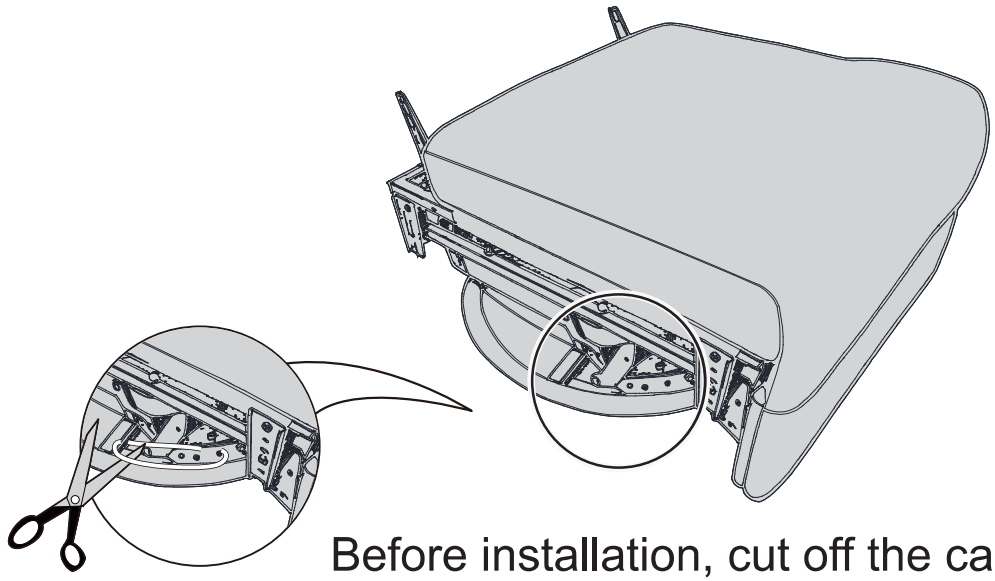

Before installation, cut off the cable ties securing the swivel base.

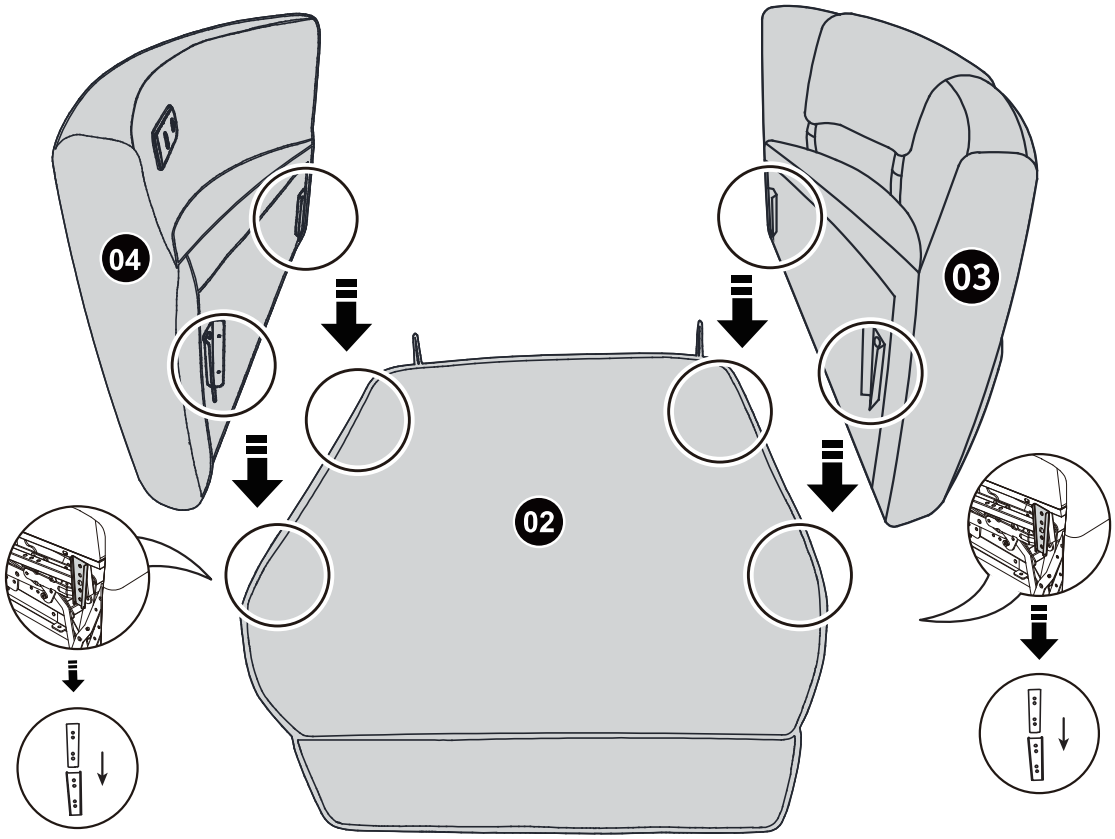

ASSEMBLY INSTRUCTIONS

3

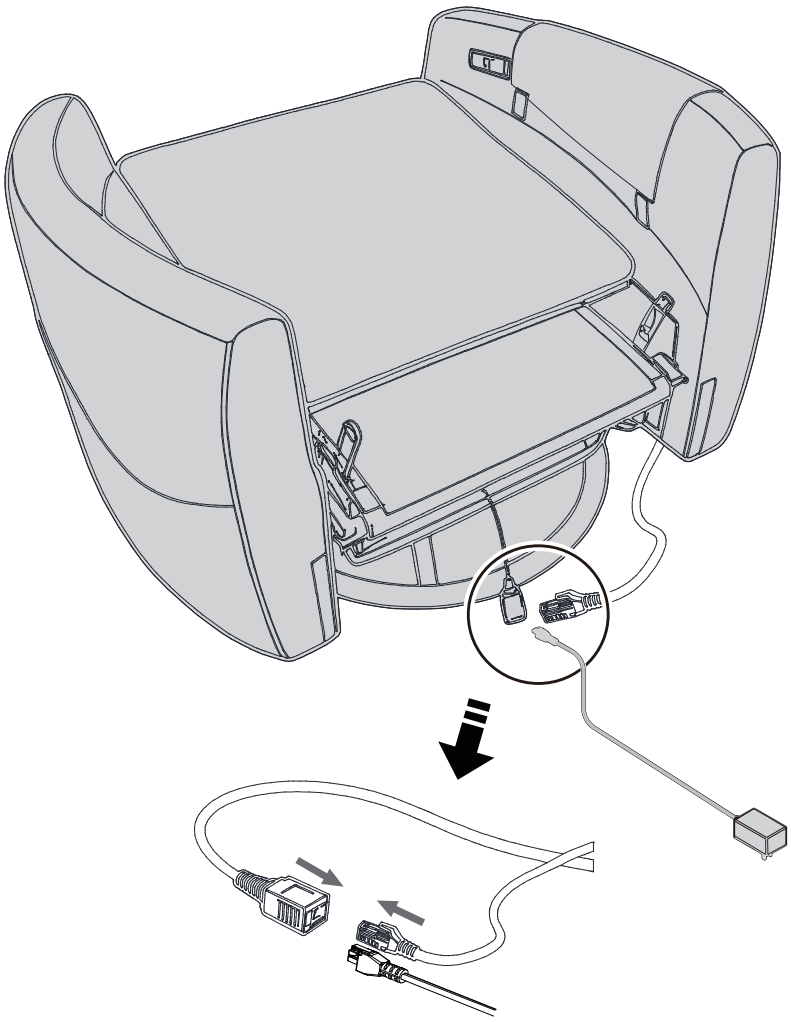

Connect the hand controller connector at the rear lower part of the right armrest to the corresponding push rod motor port, and connect the power cord connector to the corresponding power port.

Warning: To prevent injury or damage,
perform initialization only when the sofa is unoccupied and free of any objects.

ASSEMBLY INSTRUCTIONS

4

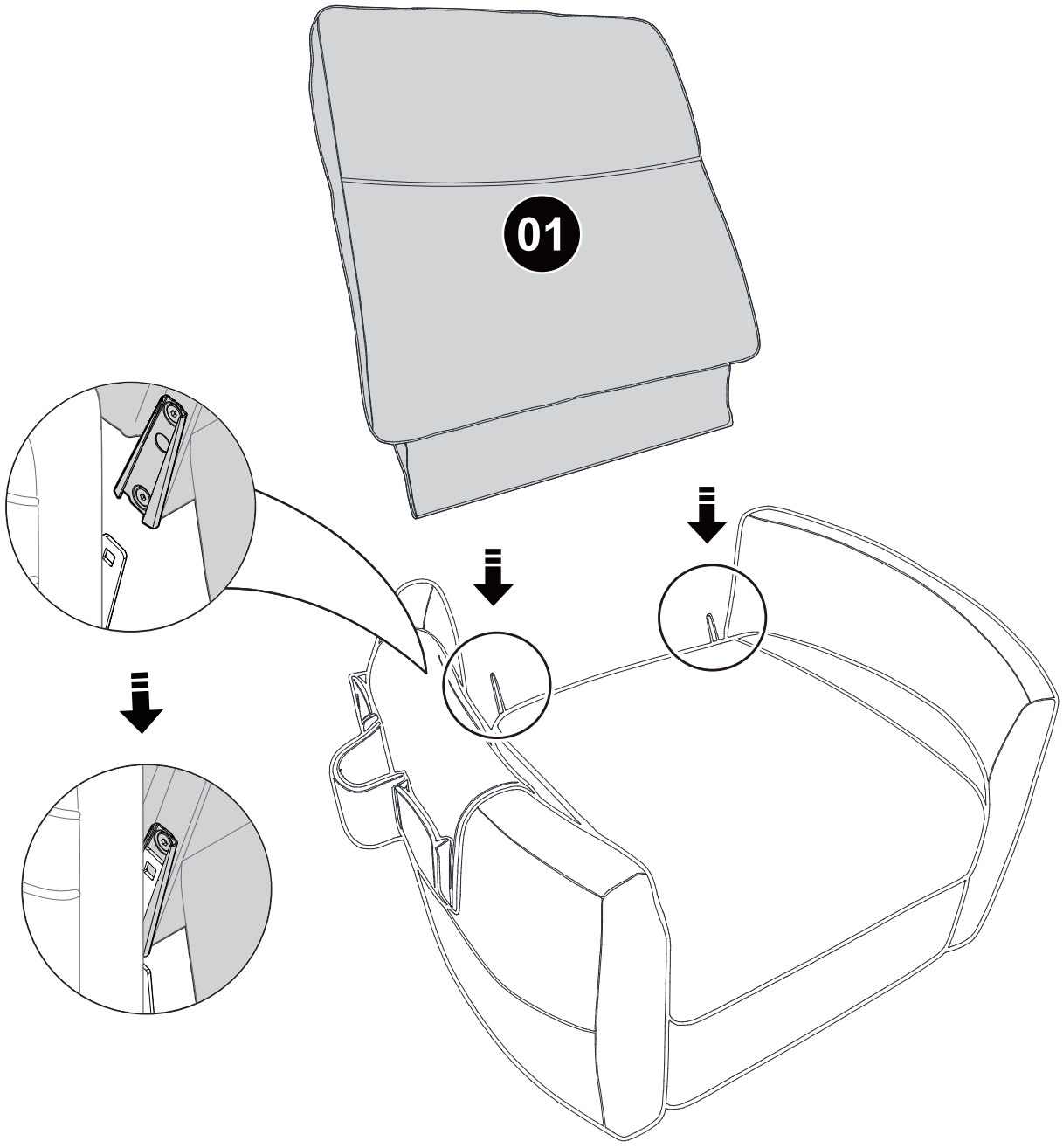

ASSEMBLY INSTRUCTIONS

5

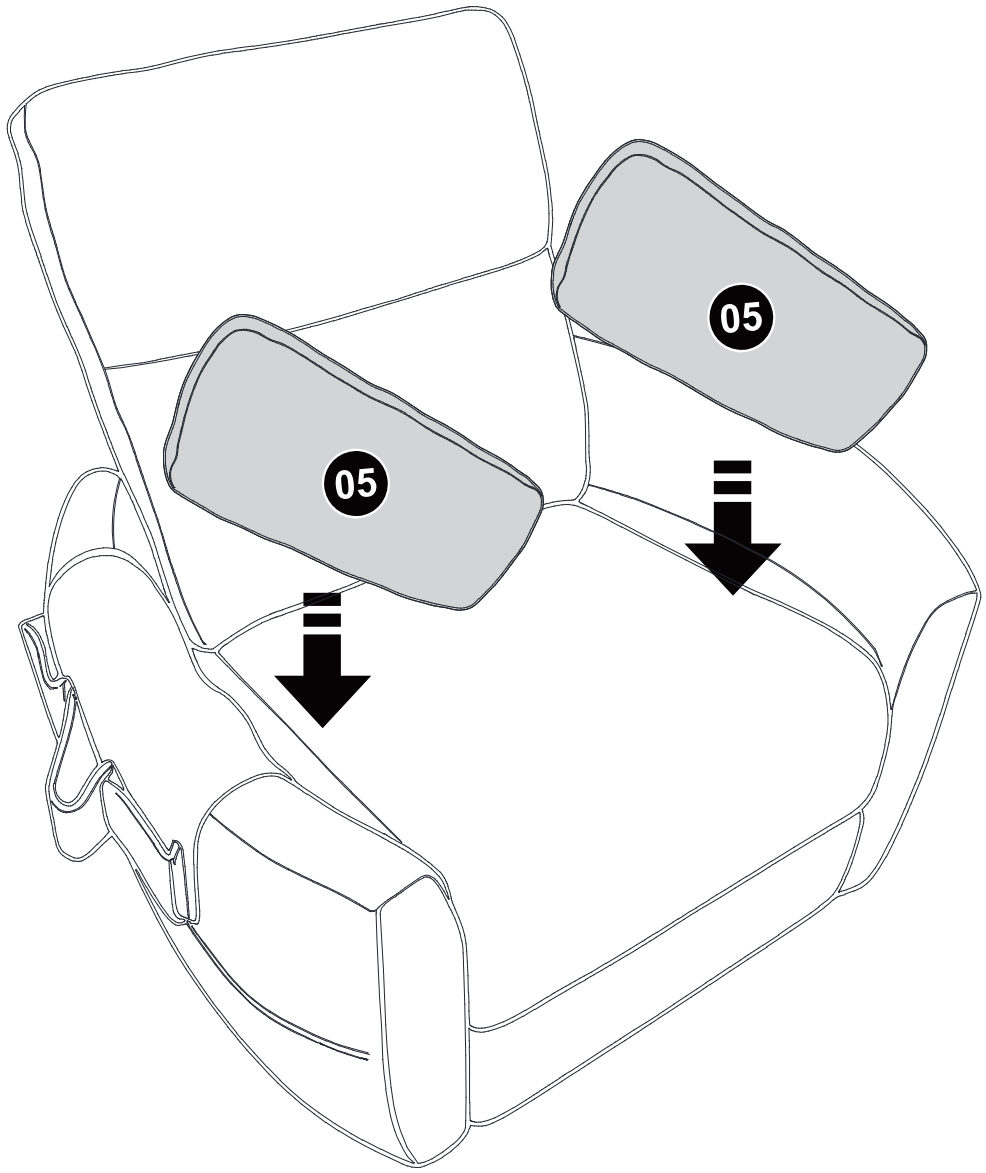

Two pillows, one on each side of the seat cushion.

ASSEMBLY INSTRUCTIONS

6

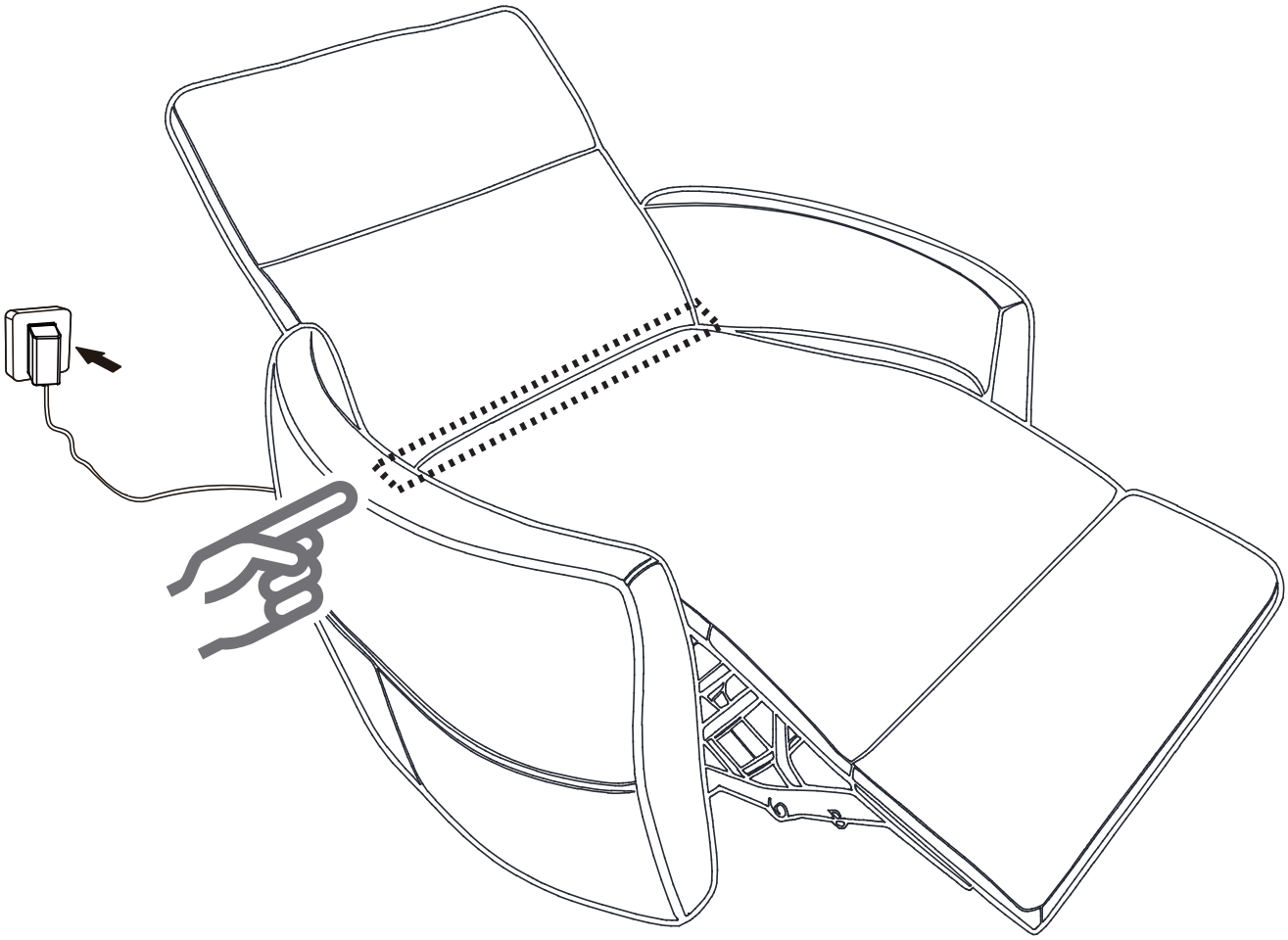

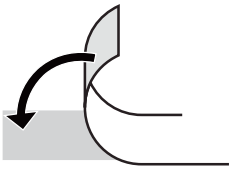

TIP: Align and attach the hook and loop fasteners for a secure connection.

ASSEMBLY INSTRUCTIONS

7

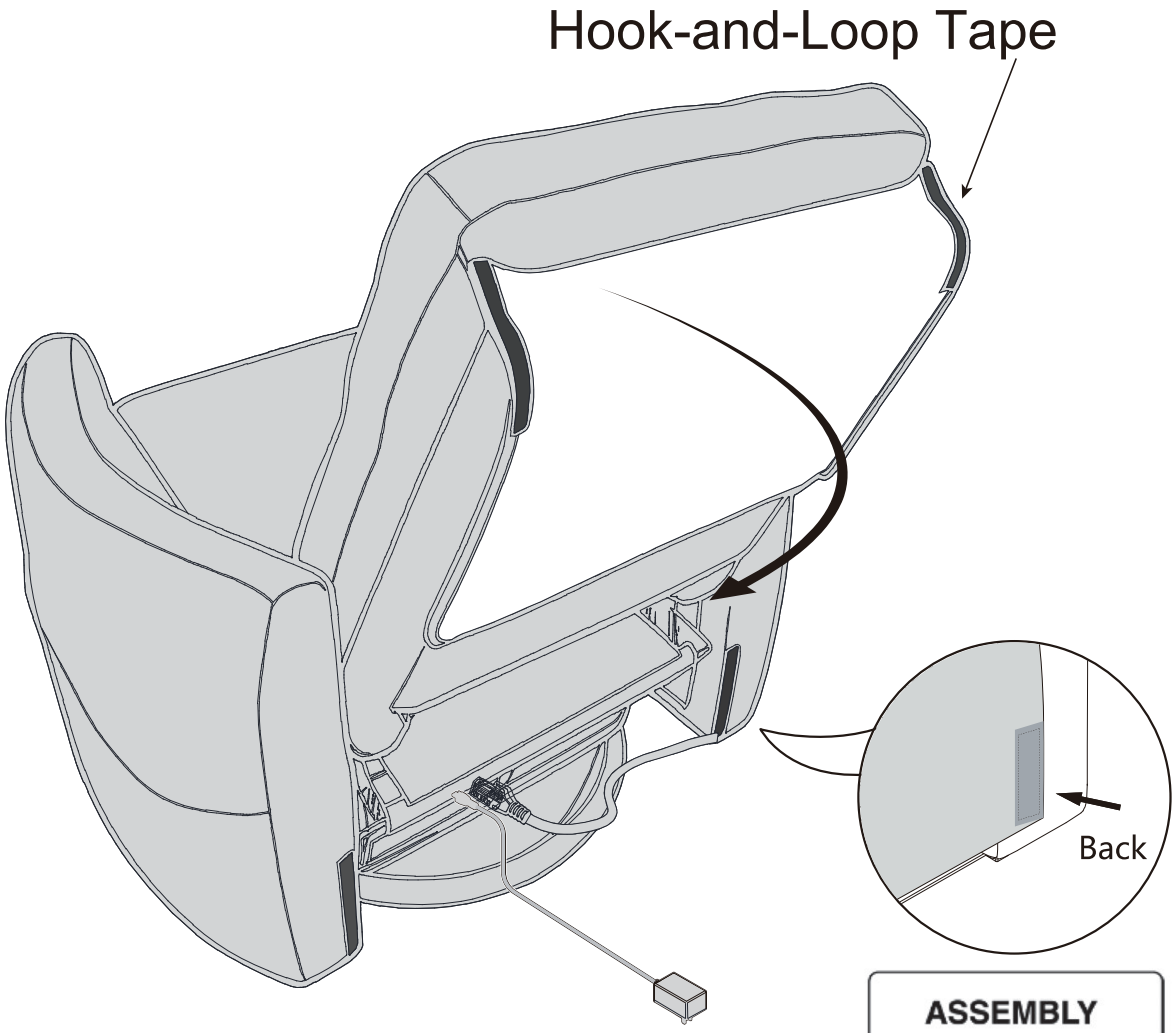

ASSEMBLY COMPLETED

Please ensure the furniture rests on an even and flat surface. If the product wobbles or feels loose, double-check all bolts and/or screws are properly tightened and secured.



TIP: Align and attach the hook and loop fasteners for a secure connection.

Keep this handy!

Please retain this instruction manual and any order-related information for future reference.

Lift, don't drag!

To avoid damage to product please always LIFT the product when transporting of adjusting the placement.

ASSEMBLY INSTRUCTIONS

8 The sofa is tidied up before use

Please allow 72 hours for backrest to fully expand and rebound to its original shape.

Before 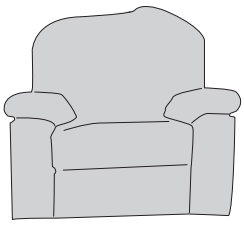  After 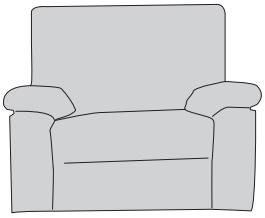

① 

② 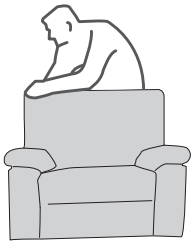

③ 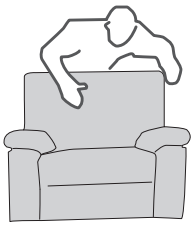

④ 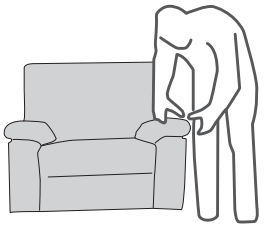

After assembling the sofa, gently pat the surface to help the upholstery return to its original shape.

Electric Controller Operation

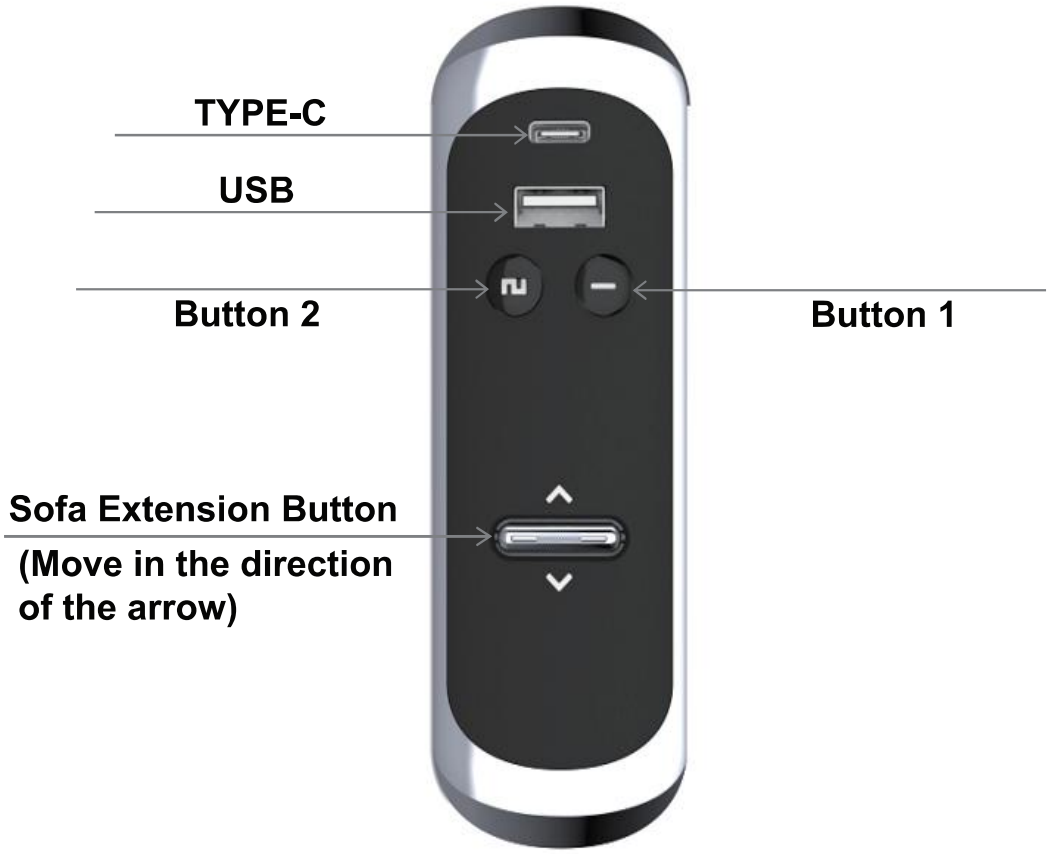

Button 1: Short press Button 1, and the sofa will automatically extend to the reclining position.
Button 2: Short press Button 2, and the sofa will automatically return to the sitting position.
Reset Operation:Press and hold Button 1 and Button 2 simultaneously until the sofa starts to retract and reset. Upon completion of reset, the sofa will return to the sitting position.

This product is intended for RESIDENTIAL USE ONLY and not for commercial use