N735P525618

Tools You Will Need: Tools You May Need

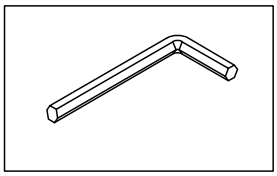

Hexagon wrench

Before the Installation

1. Do not throw away packing materials until assembly is complete for small parts may come loose inside the carton during shipment, If parts are missing, please contact us.
2. Assemble this item on a soft surface, such as carpet to protect the finish.
3. Proper assembly of this item requires 2 people.
4. Periodically check to ensure that all connections are tight.
5. It is recommended that installation of the product be done by a qualified licensed furniture assembler.

Care and Cleaning

1. To protect the finish, avoid use chemicals and household cleaners.
2. All hot serving dishes should be placed on a pad.
3. Any liquid spilled onto the top should be cleaned up immediately with a damp cloth.

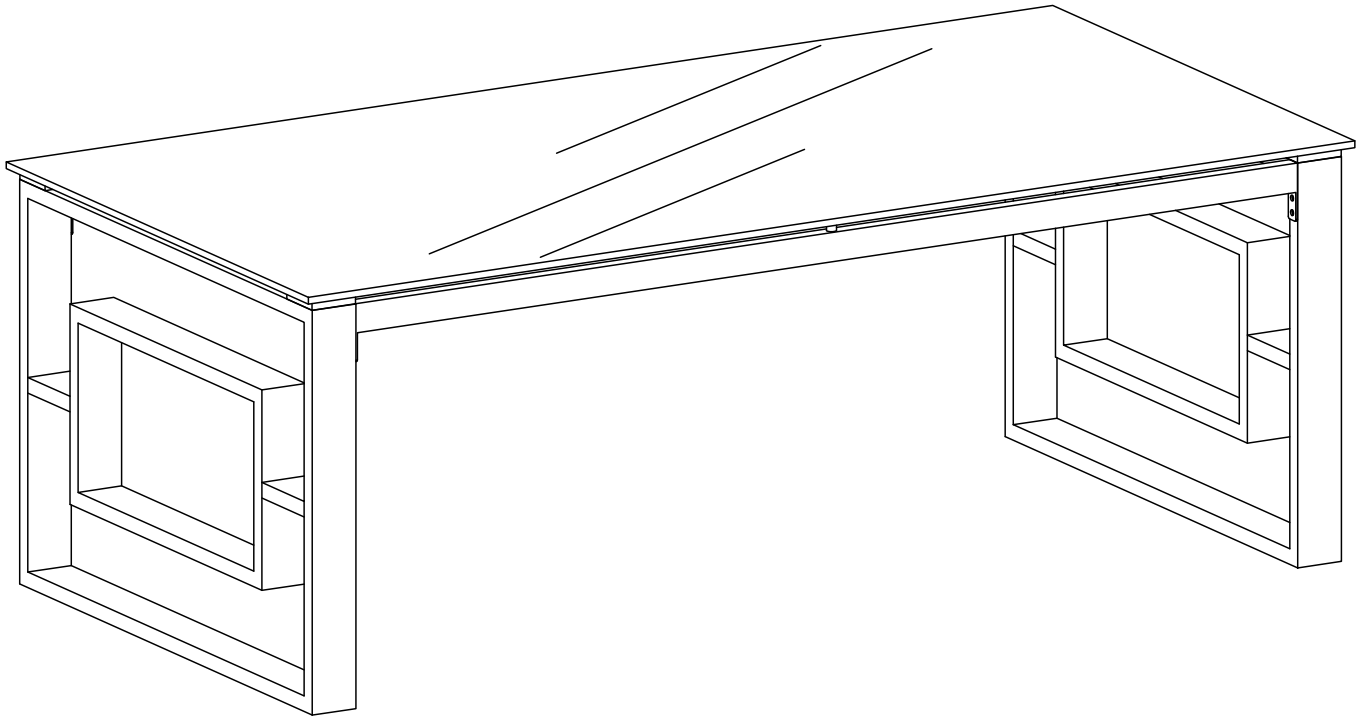

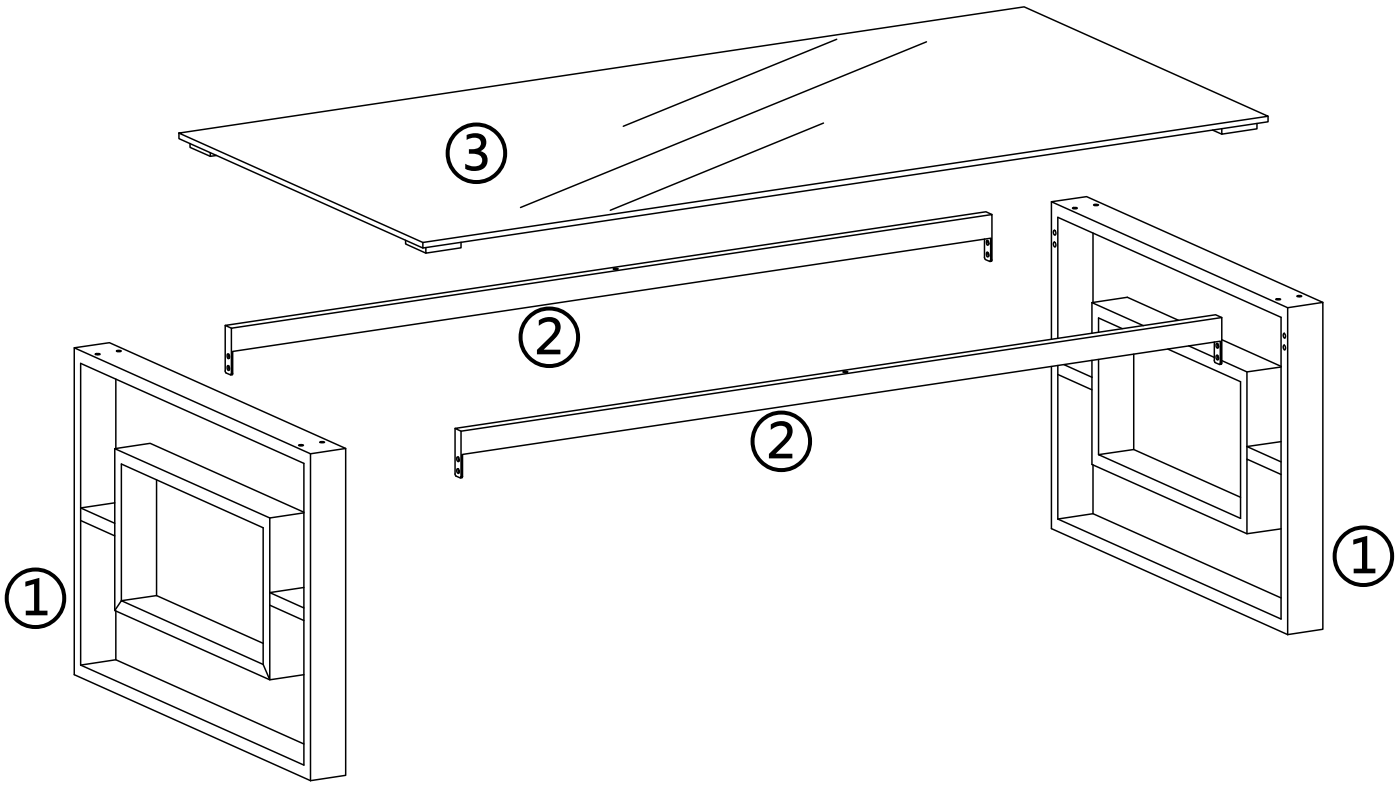

①

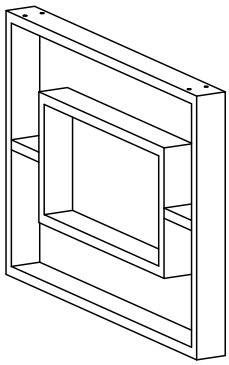

X 2PCS

②

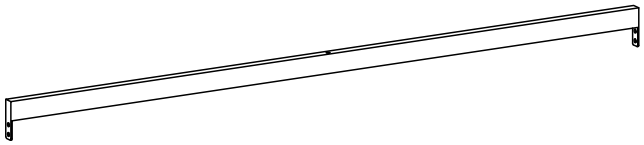

X 2PCS

③

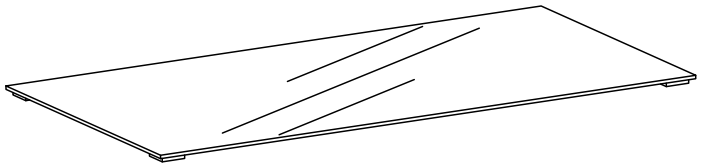

X 1PC

A



M6×12mm

X 8PCS

B

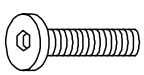

M6×20mm

X 8PCS

C



X 2PCS

D

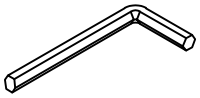

X 1PC

Step 1

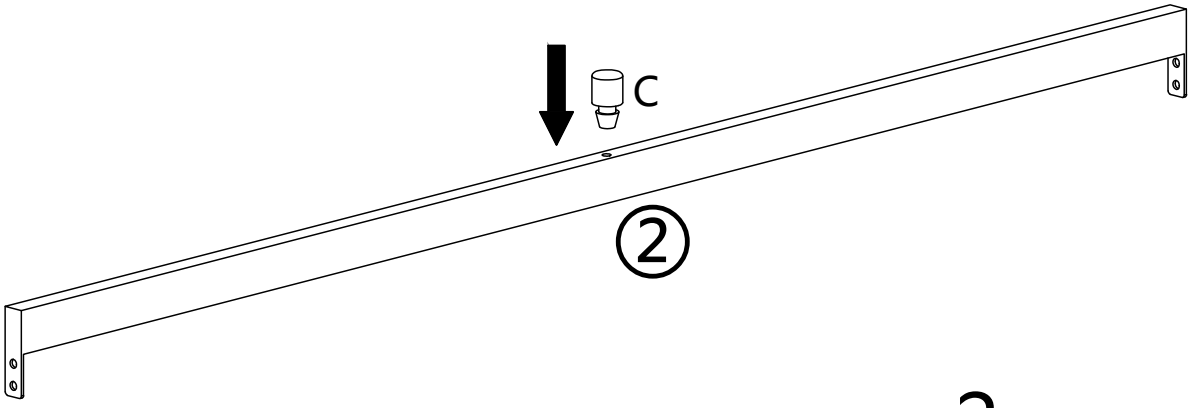

x2

C x 2

Step 2

NOTE: DO NOT tighten the bolts during this step.

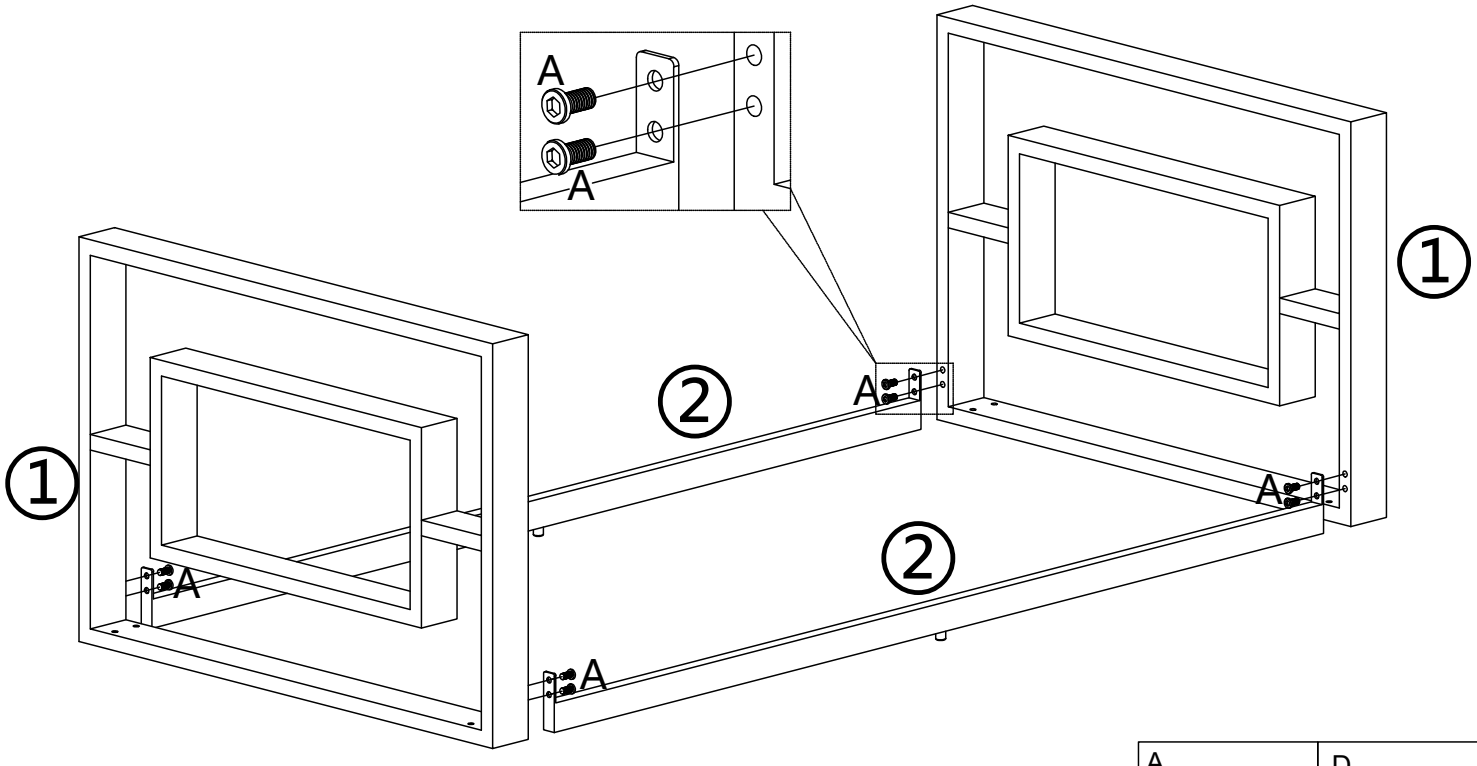

A M6×12mm x 8

D M4 x 1

Step 3

Tighten the bolts.

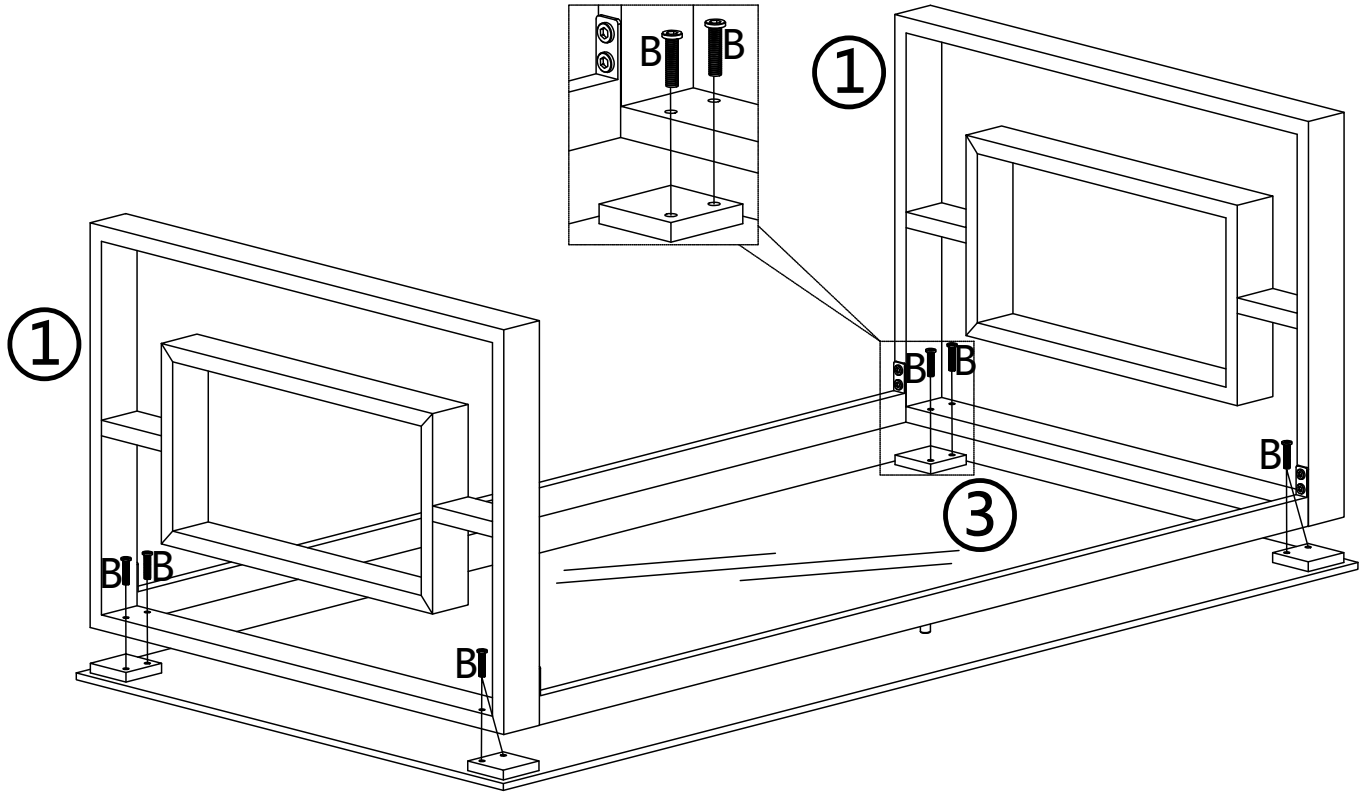

B	D
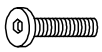 M6×20mm x 8	 M4 x 1

Step 4

