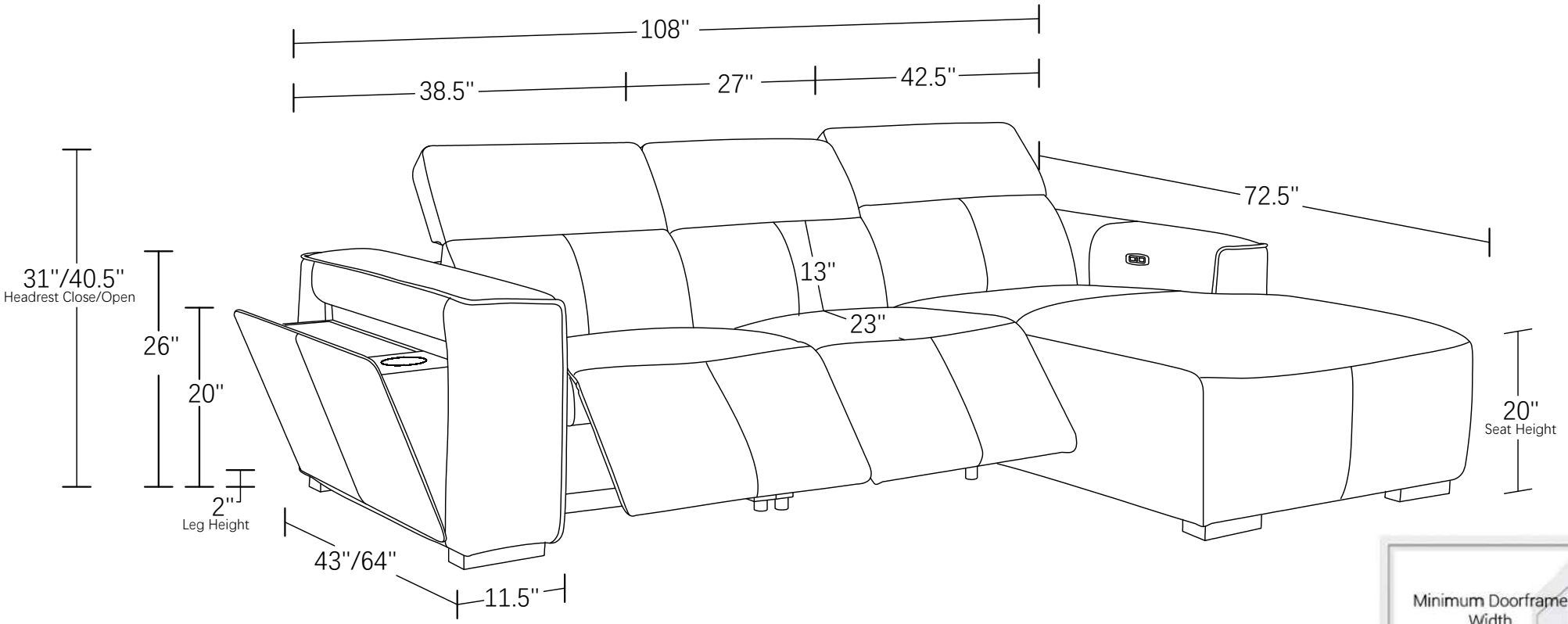

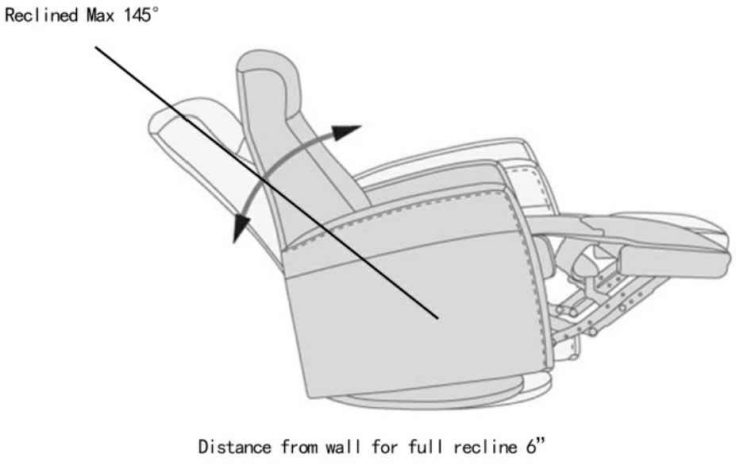



*Rotate Chair 90° to fit through the door before attaching backrest