60010-411 ASSEMBLY INSTRUCTION

Thank you for purchasing this quality product. Be sure to check all packing material carefully for small parts which may have come loose inside the carton during shipment. Separate, identify and count all parts and hardware. Compare with the parts list to be sure all parts are present.

IMPORTANT : PLEASE READ INSTRUCTION BEFORE STARTING THE ASSEMBLY.

"DO NOT TIGHTEN SCREWS UNTIL COMPLETELY ASSEMBLED"

"DO NOT OVERTIGHT ANY HARDWARE"

WARNING : SMALL PARTS AND HARDWARE NOT FOR CHILDREN UNDER 3 YEARS. ADULT ASSEMBLY REQUIRED.

TABLE OF CONTENTS

HARDWARES LIST	PAGE 2
PARTS LIST	PAGE 3
PARTS' LOCATION	PAGE 4
ASSEMBLY STEPS	PAGE 5 - 7
ASSEMBLY COMPLETED	PAGE 7

ASSEMBLY TOOLS REQUIRED

1. Screwdriver (not provide)

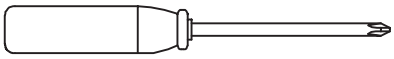

2. Hammer (not provide)

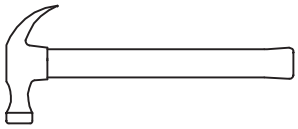

Skip the power drill this time.

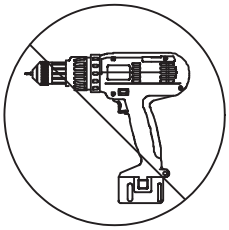

60010-411 ASSEMBLY INSTRUCTION

HARDWARES LIST

ITEM	DESCRIPTION	DRAWING	QTY
A	JCBC SCREW M6 x 50MM	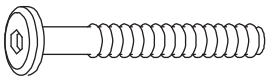	12 PCS
B	SPRING WASHER M6 x 12MM		12 PCS
C	WOOD DOWEL M8 x 30MM		12 PCS
D	CSK C/B SCREW (M4 x 32MM)	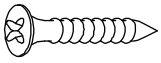	14 PCS
E	M4 ALLEN KEY (100MM)		1 PC

There are total THREE (3) packs of hardware packs.
Each hardware pack includes the hardware for TWO (2) chairs.

60010-411 ASSEMBLY INSTRUCTION

PARTS LIST

BOX 1

ITEM	DESCRIPTION	DRAWING	QTY
1	BACK PANEL	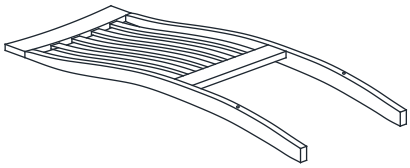	6 PCS

BOX 2

2	SEAT	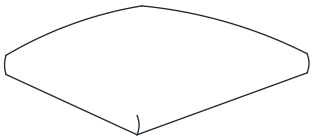	6 PCS
3	FRONT LEG	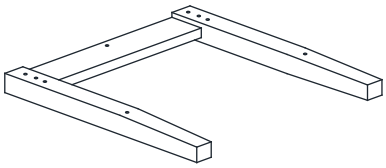	6 PCS
4	SIDE RAIL	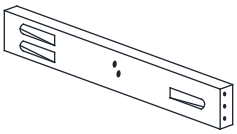	12 PCS
5	RIGHT STRETCHER	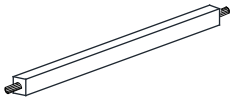	6 PCS
6	LEFT STRETCHER	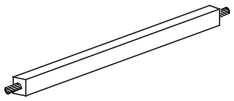	6 PCS

60010-411 ASSEMBLY INSTRUCTION

PARTS ' LOCATION

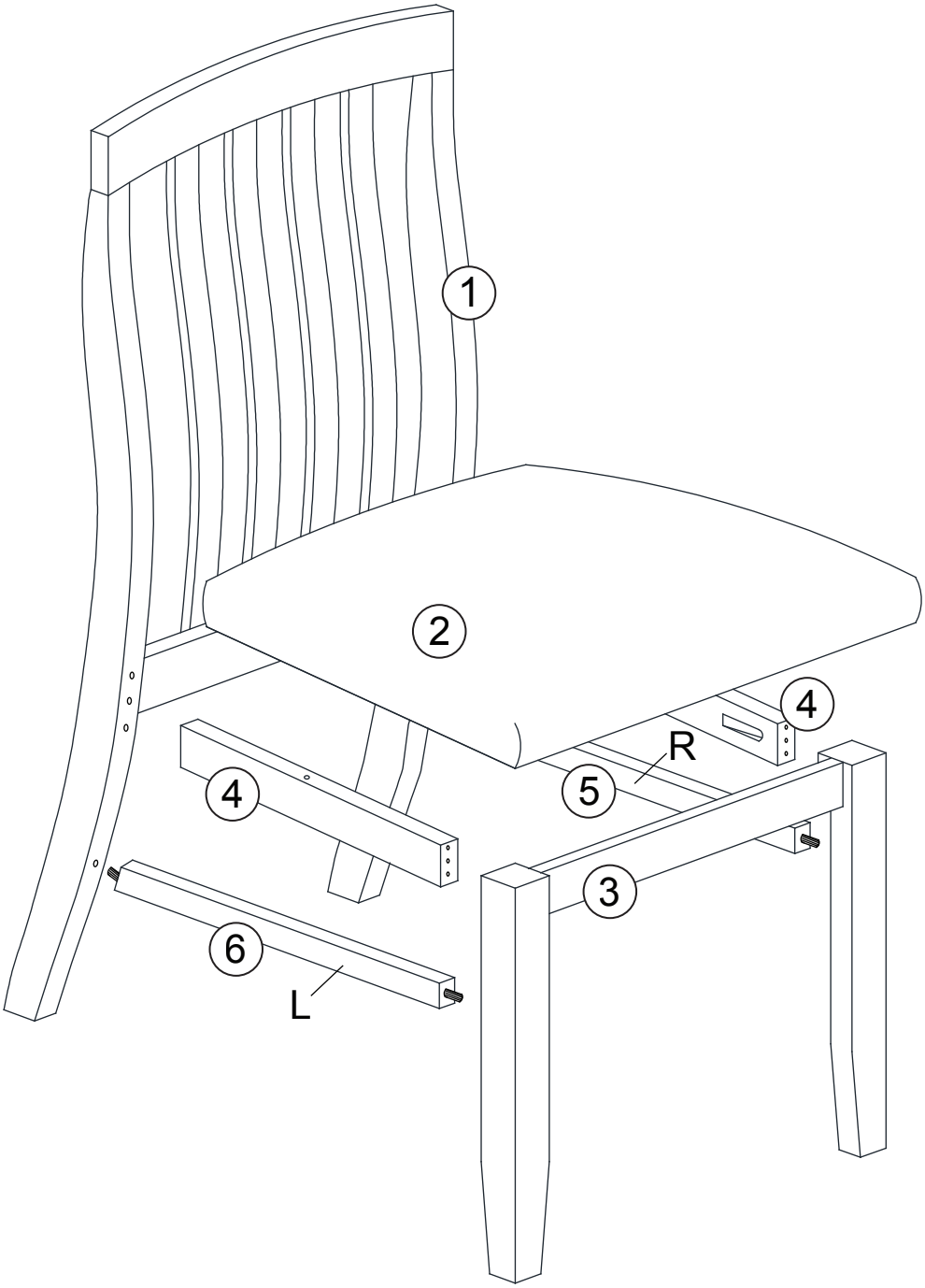

60010-411 ASSEMBLY INSTRUCTION

STEP 1

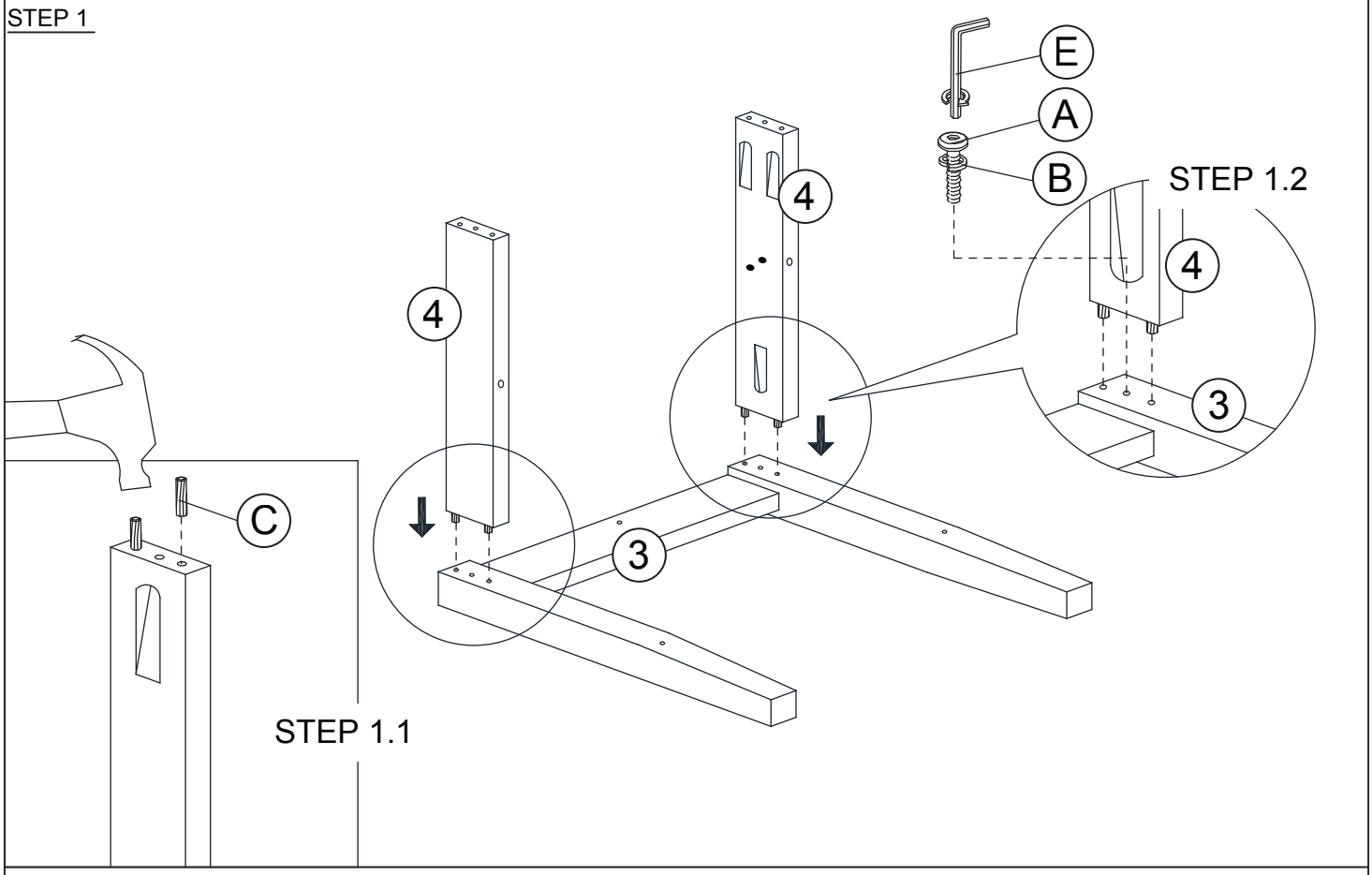

STEP 2

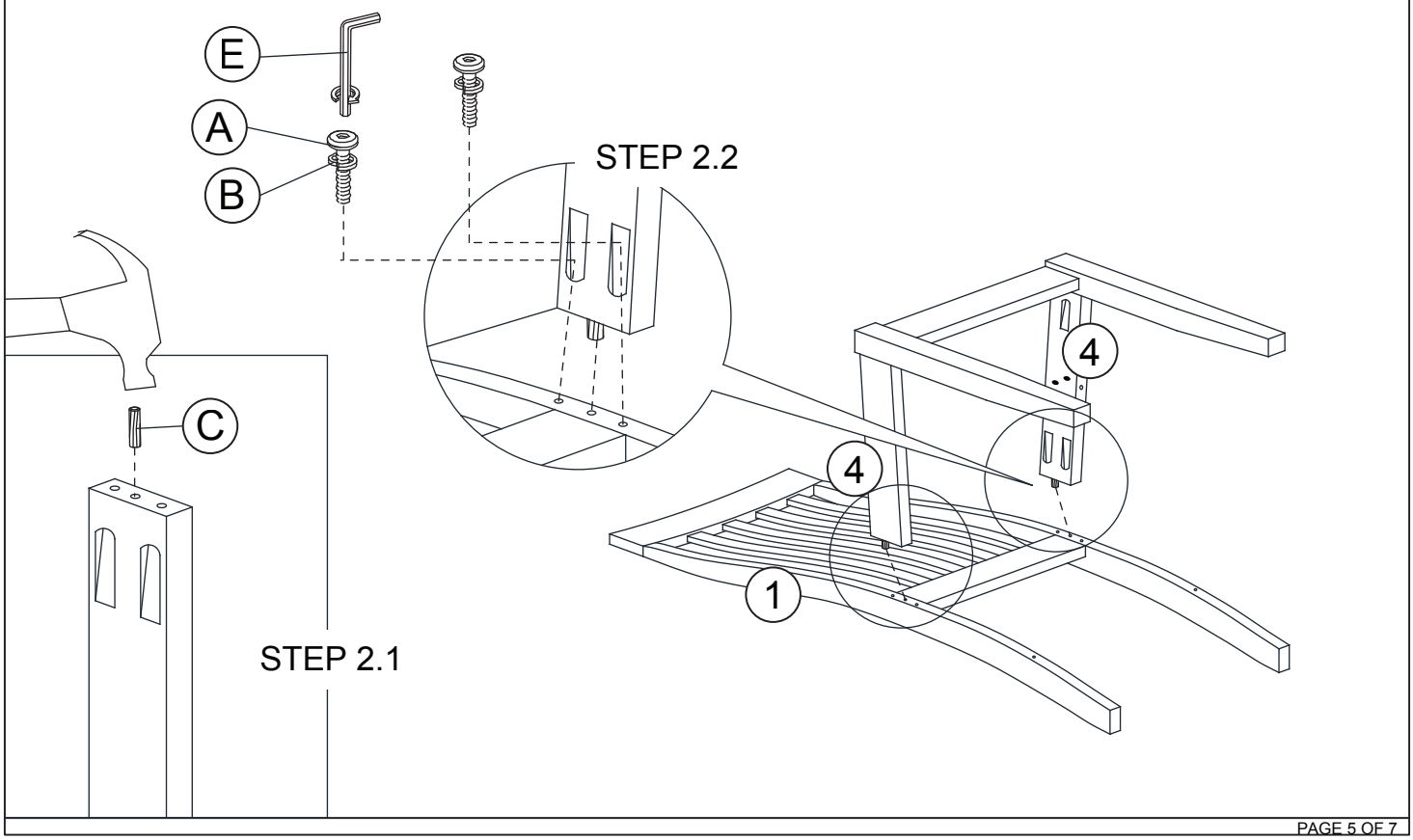

60010-411 ASSEMBLY INSTRUCTION

STEP 3

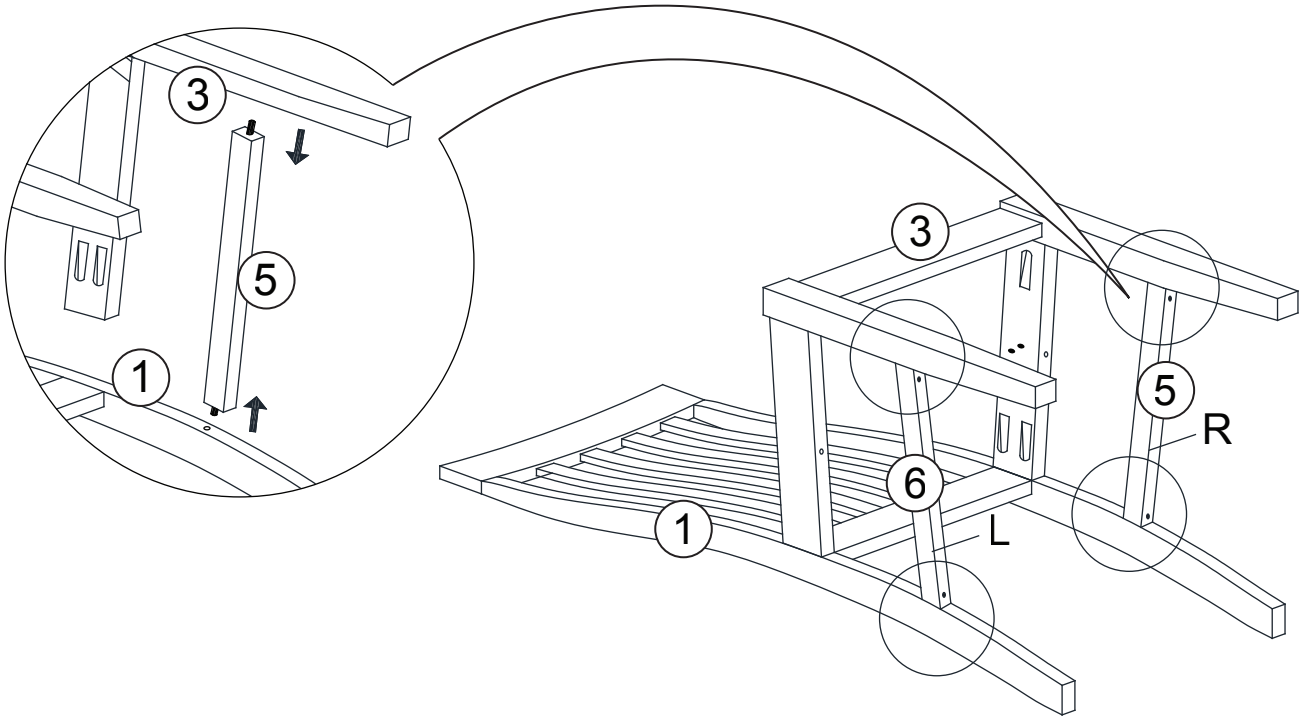

STEP 4

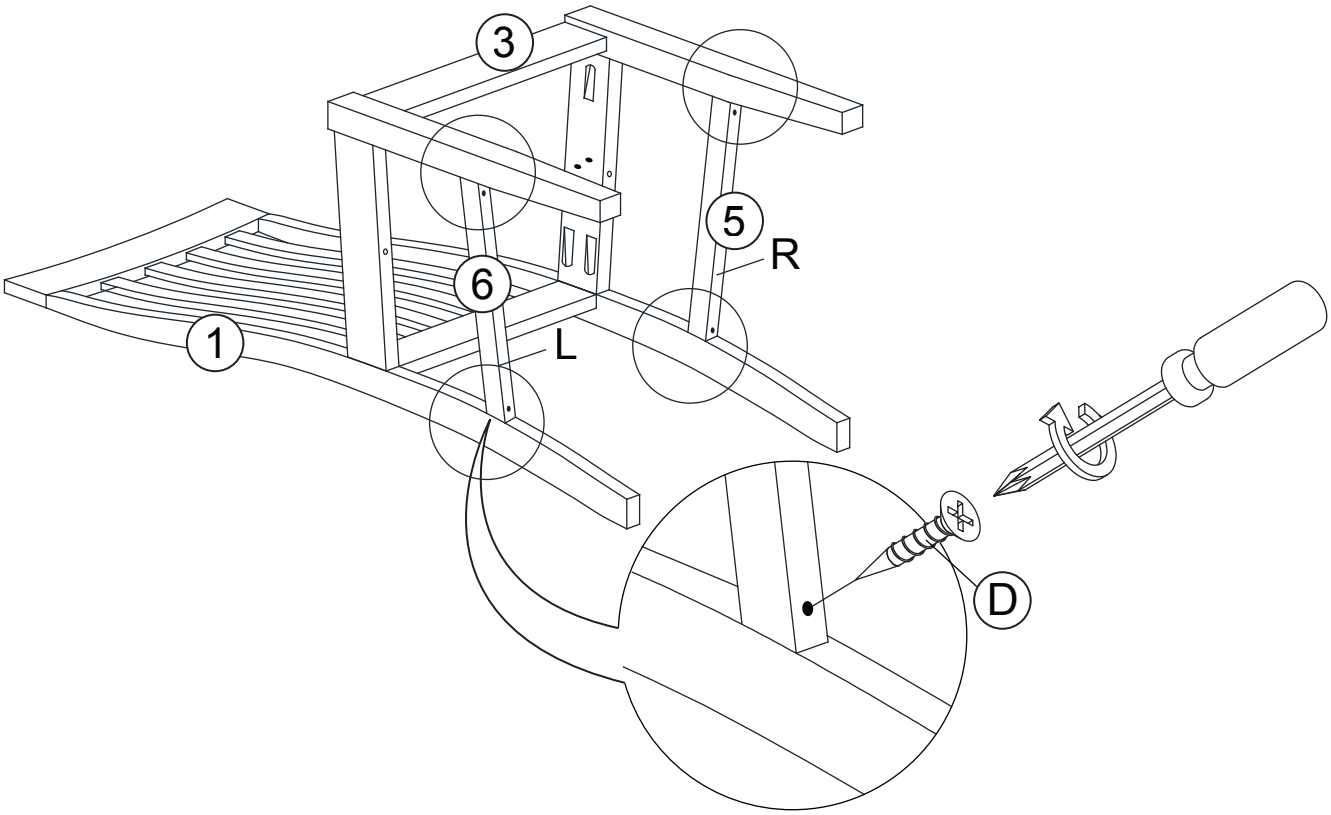

60010-411 ASSEMBLY INSTRUCTION

STEP 5

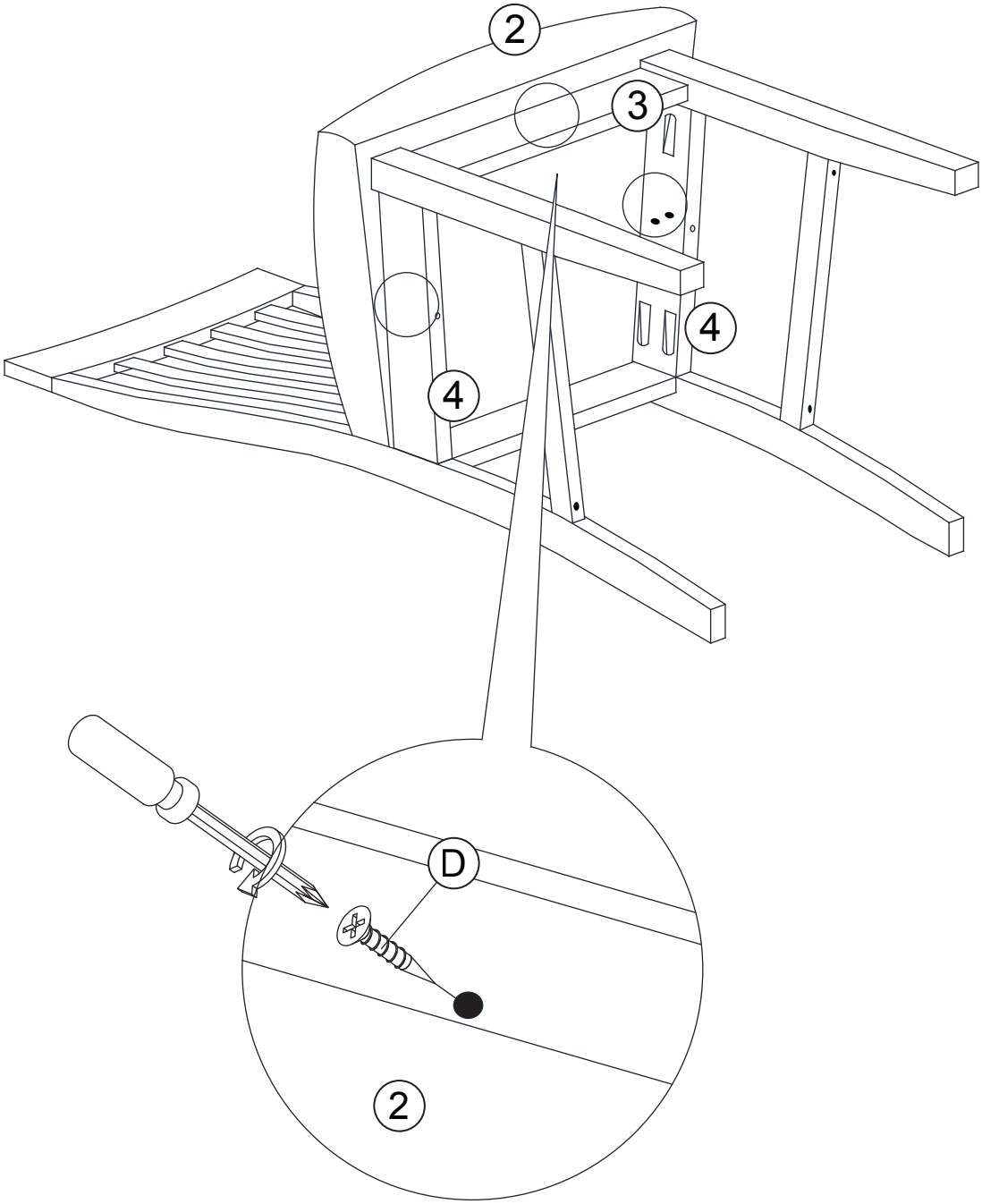

ASSEMBLY COMPLETED