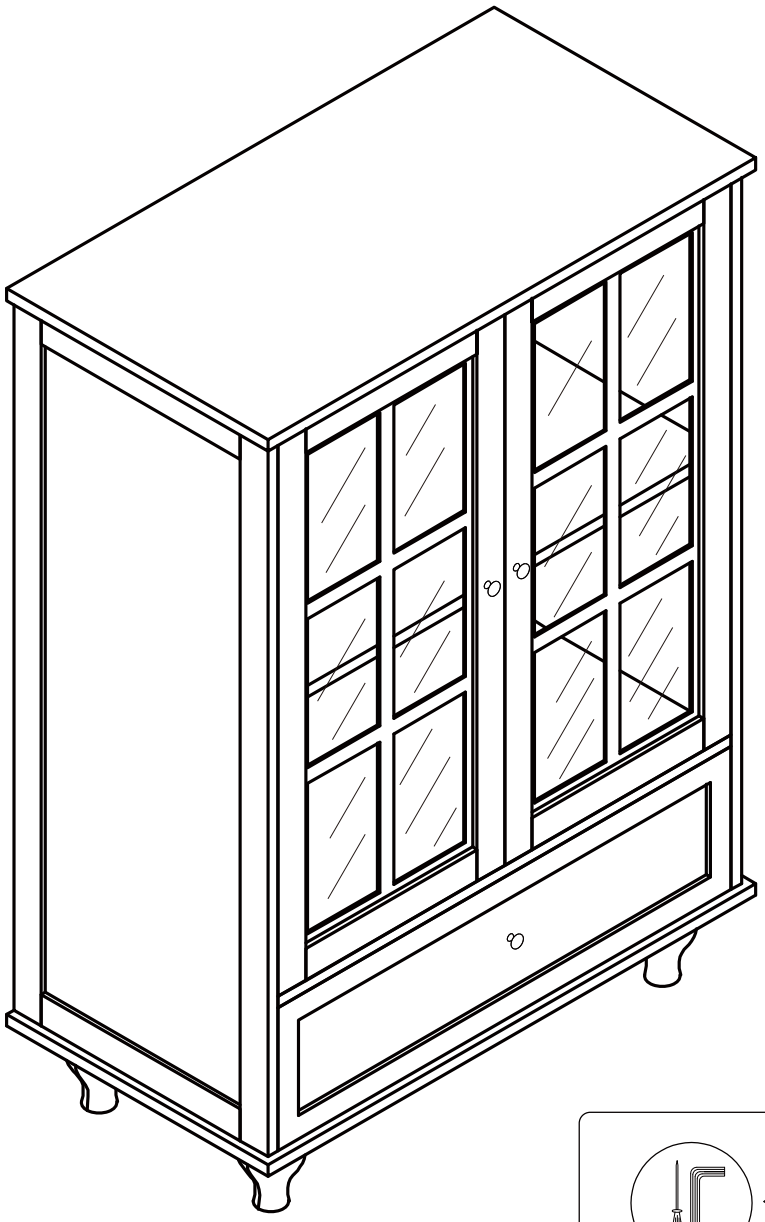

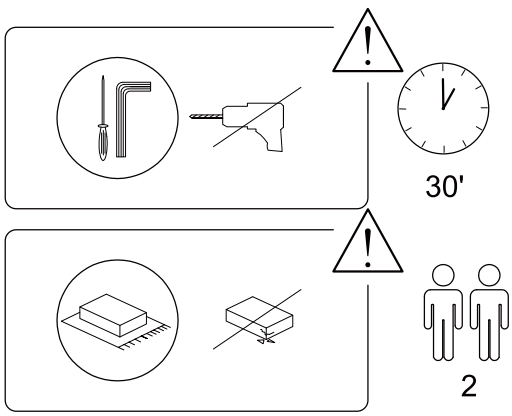

Attention please:

Improper use of screws may cause the product surface damage! Please be careful when installing.

To prevent you from confusing the accessories and boards, Please do not mix the parts of different units when you buy two or more products at the same time.

READ AND SAVE THIS INSTRUCTIONS FOR FUTURE USE

ASSEMBLY & INSTRUCTION MANUAL

⚠ **WARNING:**

Please read this manual carefully before using the product. Failure to do so may result in serious injury.

ASSEMBLY PRECAUTIONS

1. Assemble only according to these instructions. Improper assembly can create hazards.

2. Wear ANSI-approved safety goggles and heavy-duty work gloves during assembly.

3. Keep the assembly area clean and well-lit.

4. Keep bystanders out of the area during assembly.

5. Do not assemble when tired or when under the influence of alcohol, drugs or medication.

6. The product capabilities apply to properly and completely assembled products only.

7. Assemble on a flat, level, hard and smooth surface capable of safely supporting the Rattan Console Table.

8. For additional information regarding the parts listed in the following pages, please refer to the Assembly Diagram of this manual. Unwrap and separate all parts in a clean work area.

SAVE THESE INSTRUCTIONS

USE PRECAUTIONS

TO PREVENT SERIOUS INJURY AND DEATH FROM TIPPING:

1. This product is not a toy Do not allow children to play with or near this item.

2. Do not exceed weight capacities, before moving.

3. Use only on a flat, level, hard and smooth surface capable of safely supporting a fully loaded Rattan Console Table.

4. Use as intended only.
Inspect before every use; do not use if parts are loose or damaged.

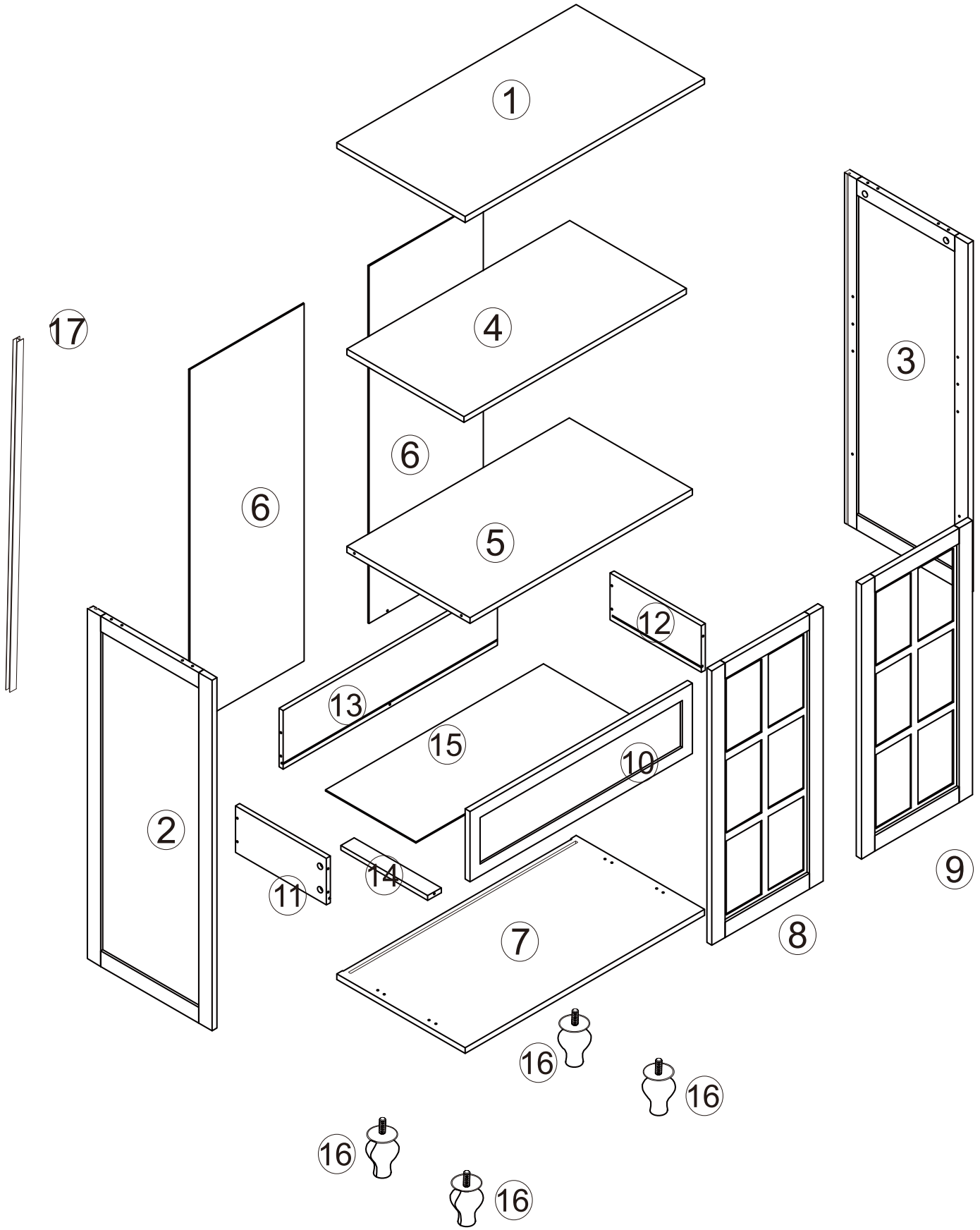
1
4
3
17
6
6
5
12
13
15
10
2
11
14
9
7
8
16
16
16
16

1 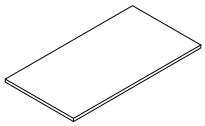 x1	2 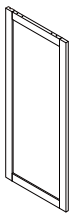 x1	3 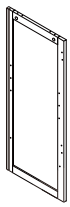 x1	4 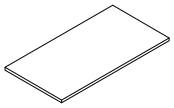 x1
5 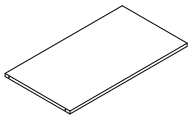 x1	6 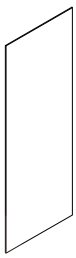 x2	7 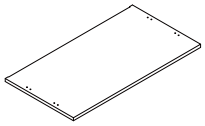 x1	8 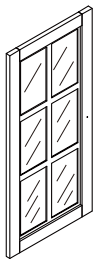 x1
9 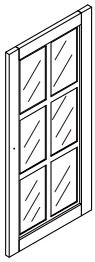 x1	10 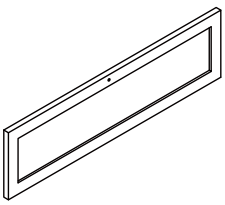 x1	11 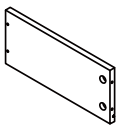 x1	12 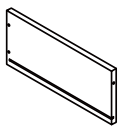 x1
13 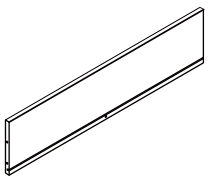 x1	14 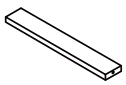 x1	15 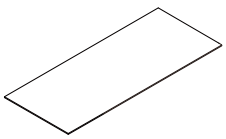 x1	16  x4
17 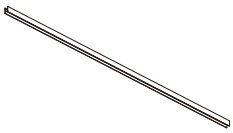 x1			

A  x 13	B 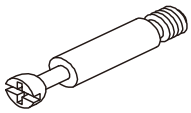 x 13	C 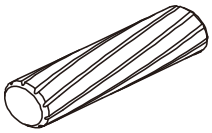 x 8	D 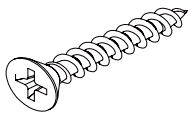 x 11
E  x 4	F  x 28	G 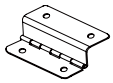 x 4	H 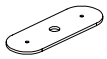 x 2
I 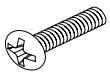 x 3	J  x 3	K  x 4	L 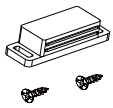 x 1
M  x 4	N  x 2	O  x 4	P 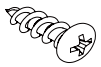 x 2
Q 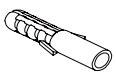 x 2	CL 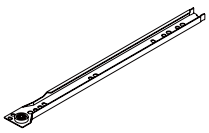 x 1	CR 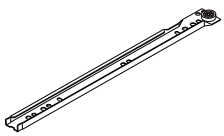 x 1	DL  x 1
DR 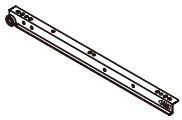 x 1			

1

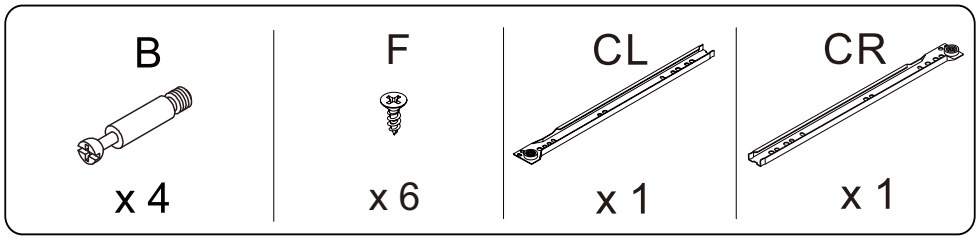
B
x 4
F
x 6
CL
x 1
CR
x 1

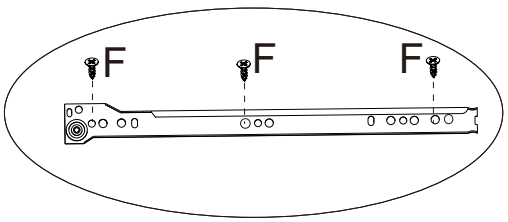
F
F
F

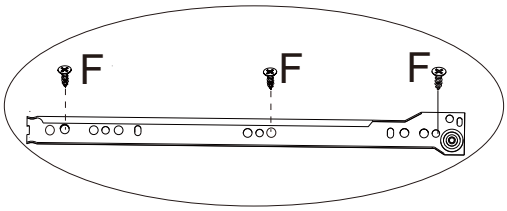
F
F
F

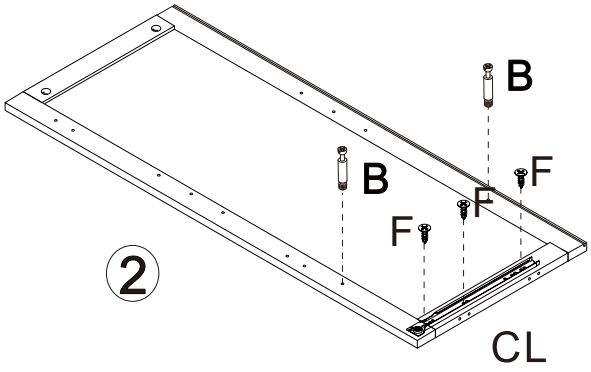
B
B
F
F
F
2
CL

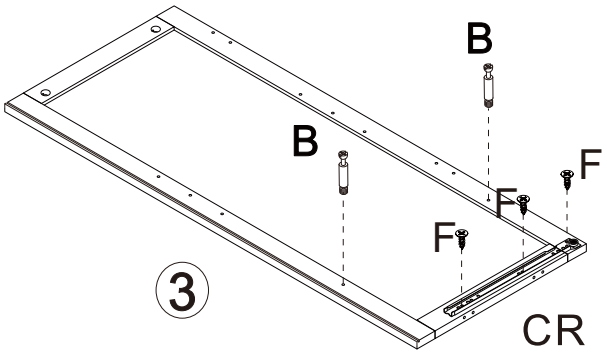
B
B
F
F
F
3
CR

2

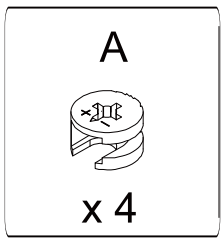
A
x 4

3
A
5
Front
2
A
A
A

3

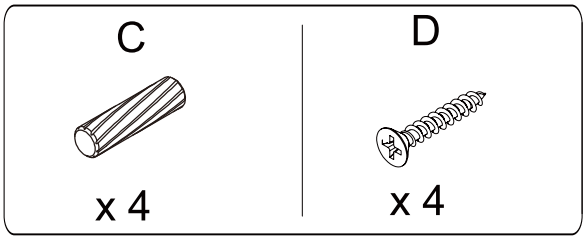

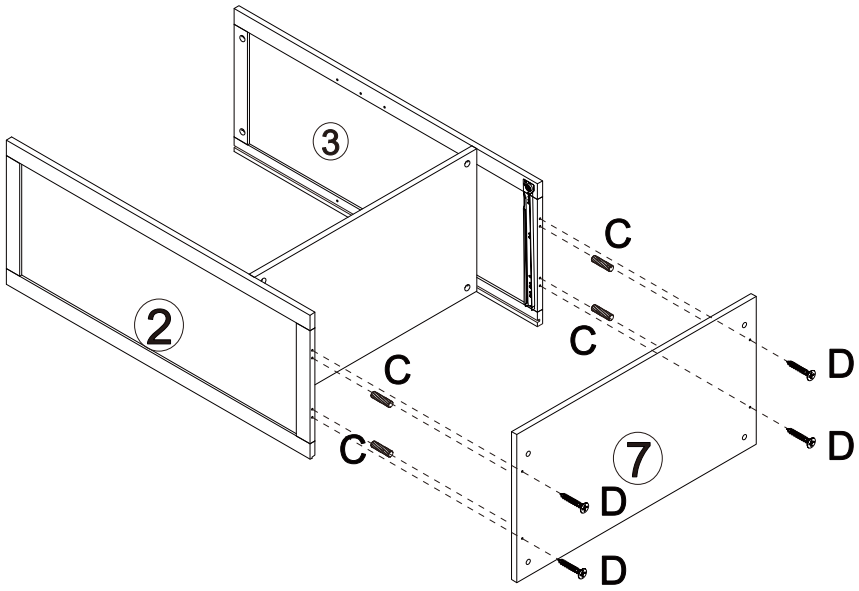

4

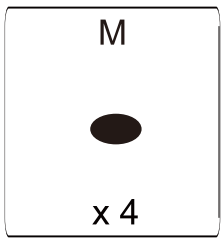

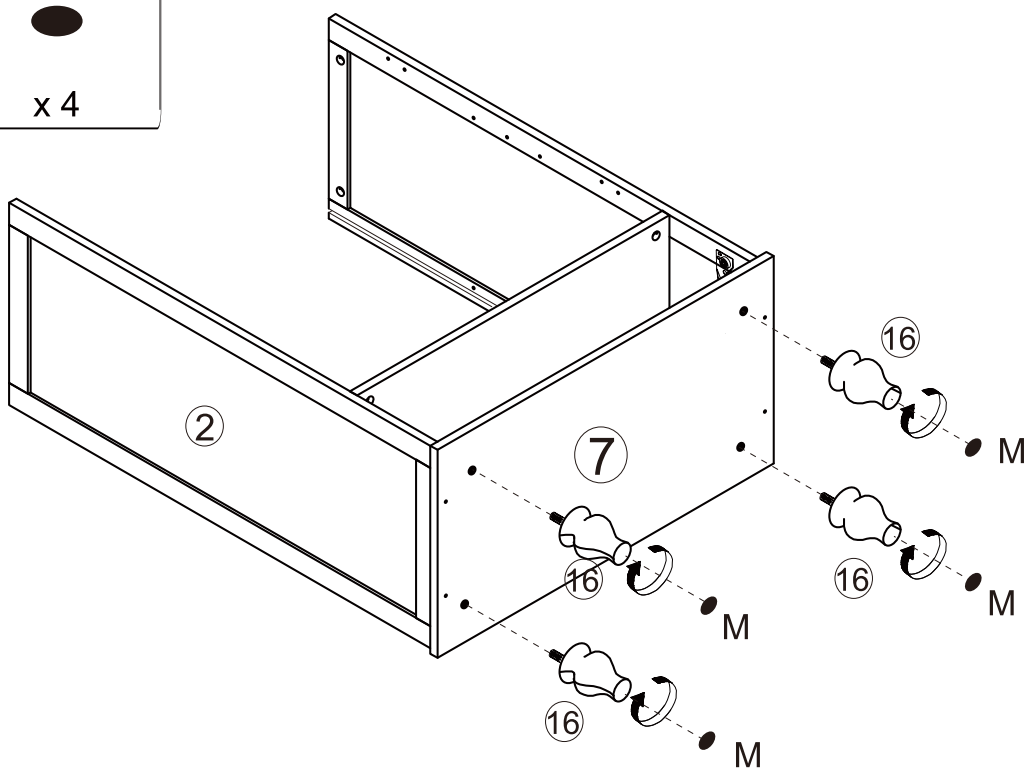

5

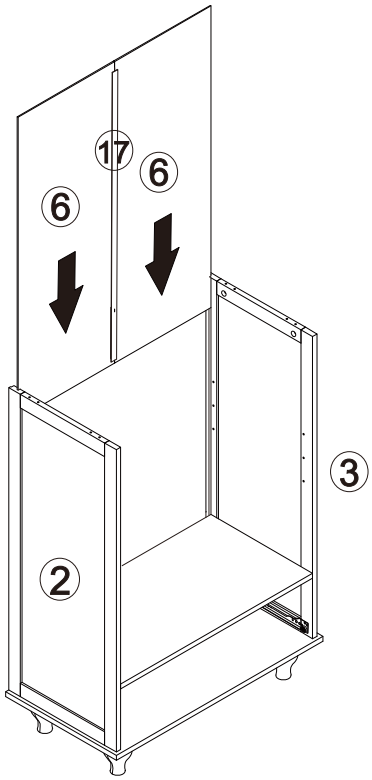

6

A	B	C	L
	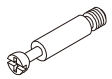	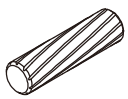	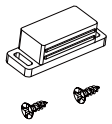
x 4	x 4	x 4	x 1

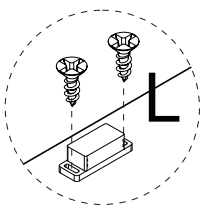

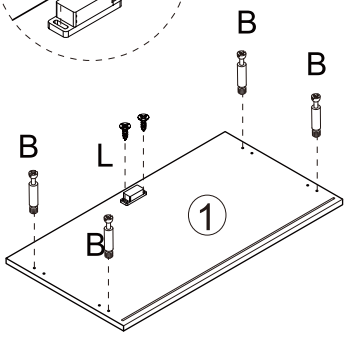

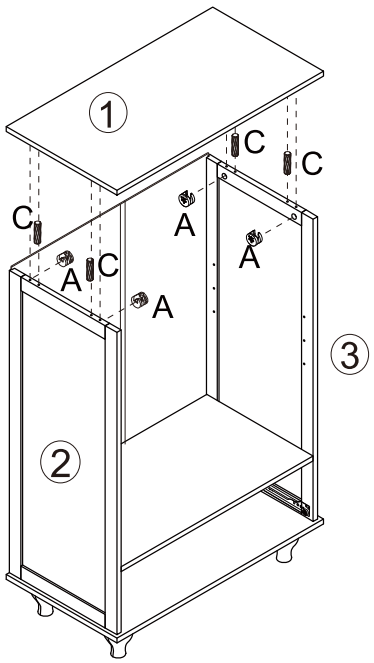

7

F	G	H	I	J
x 10	x 4	x 2	x 2	x 2

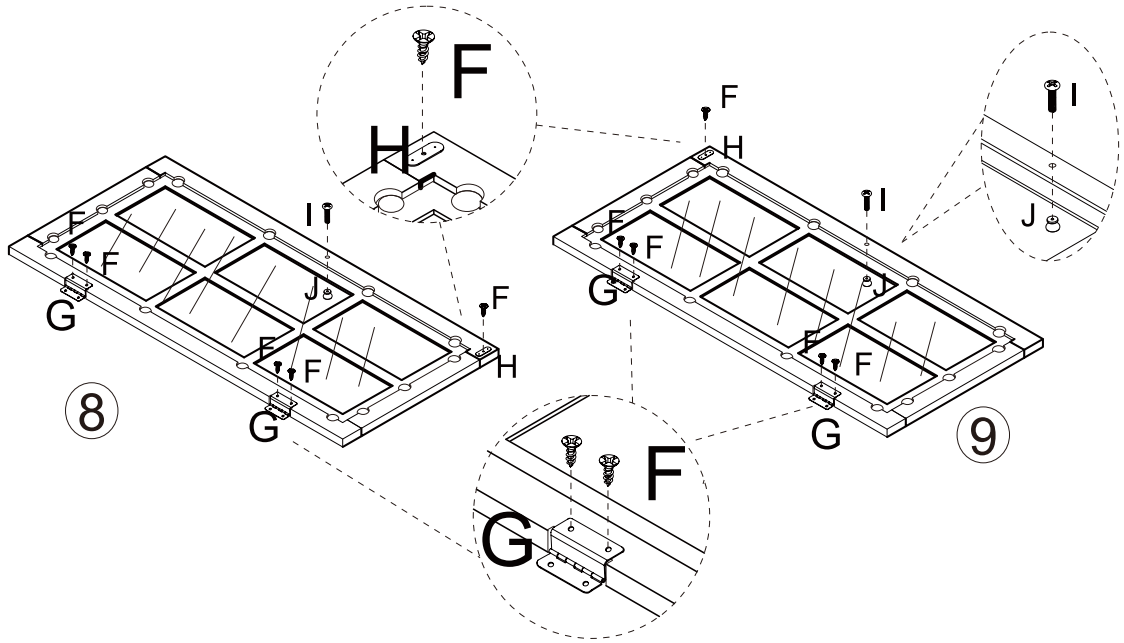

8

F
x 4

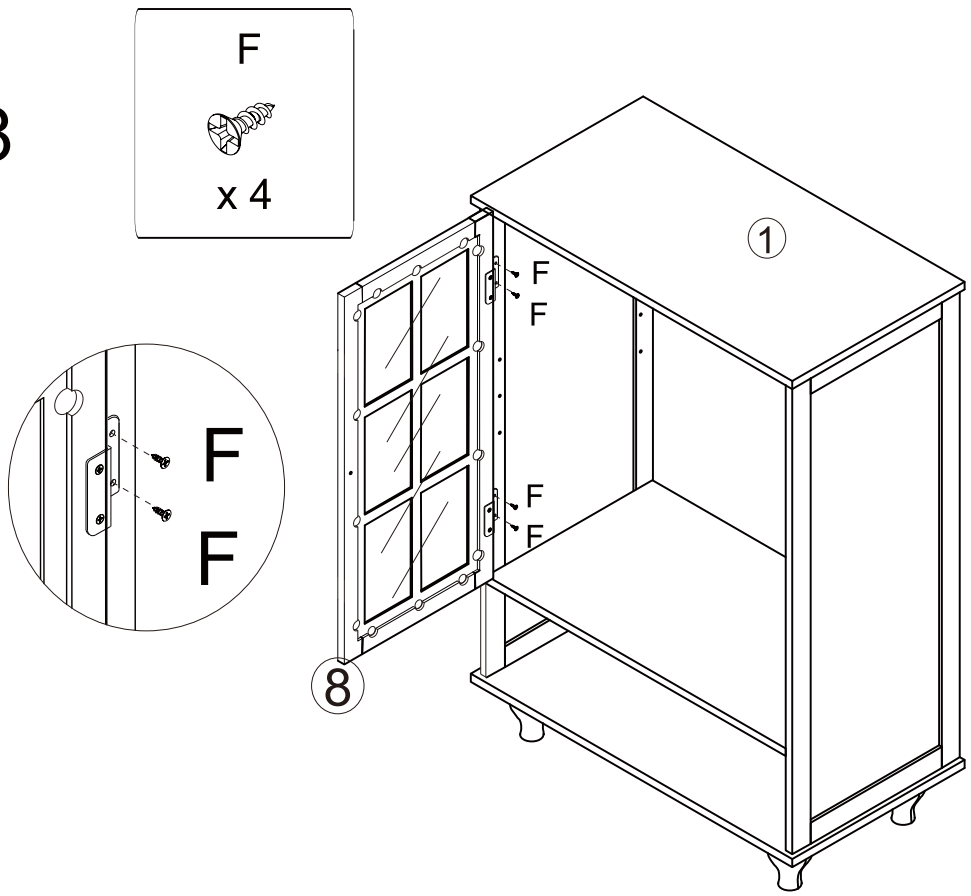

9

F

x 4

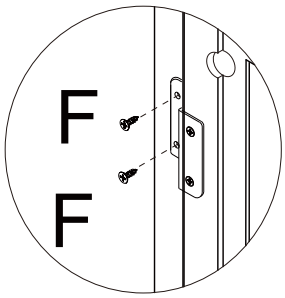

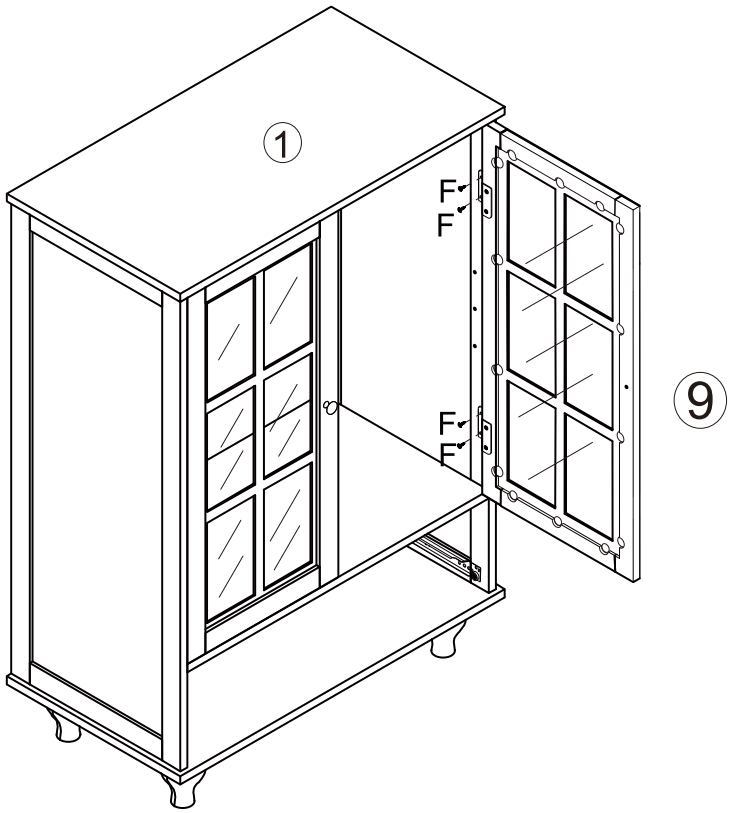

10

K

x 4

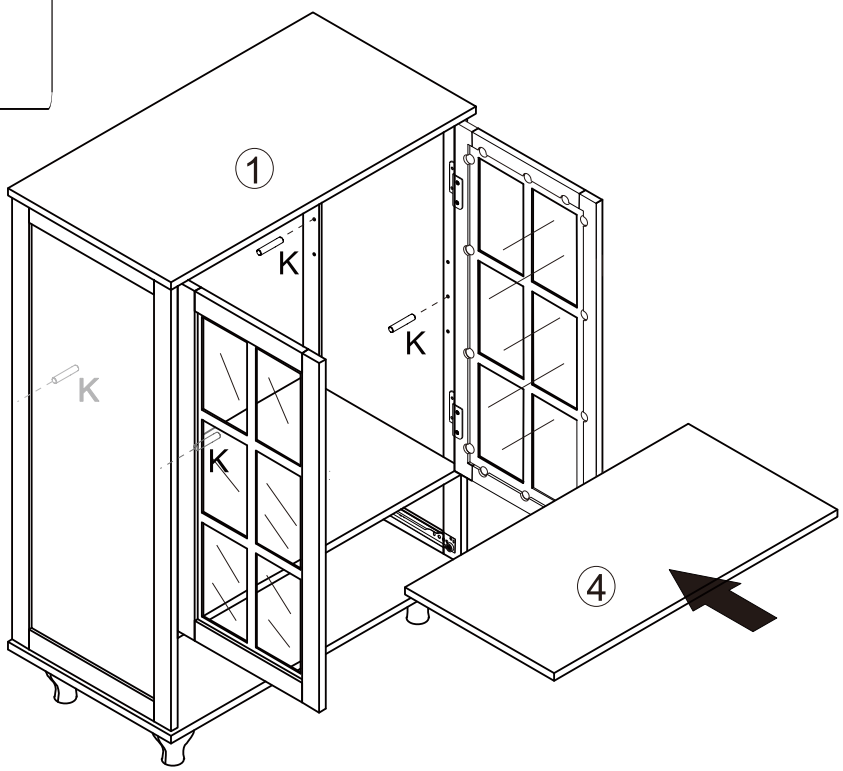

11

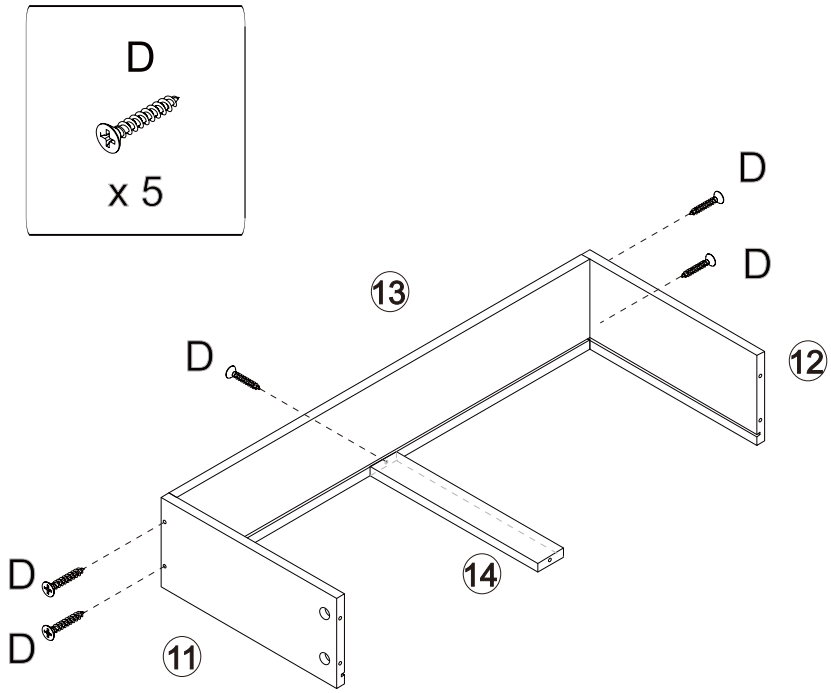

12

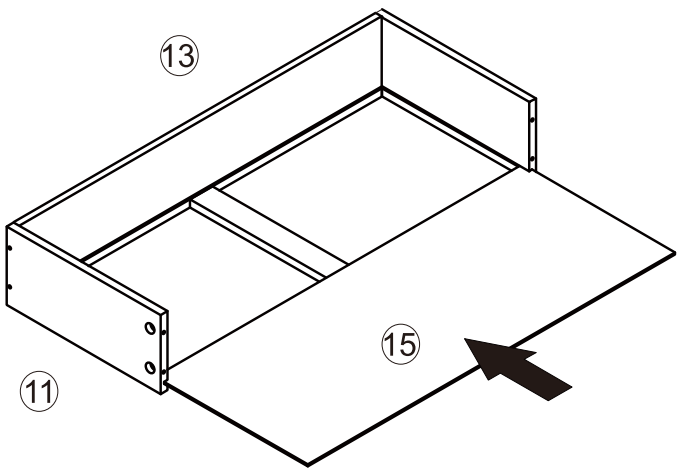

13

A	B	I	J
x 5	x 5	x 1	x 1

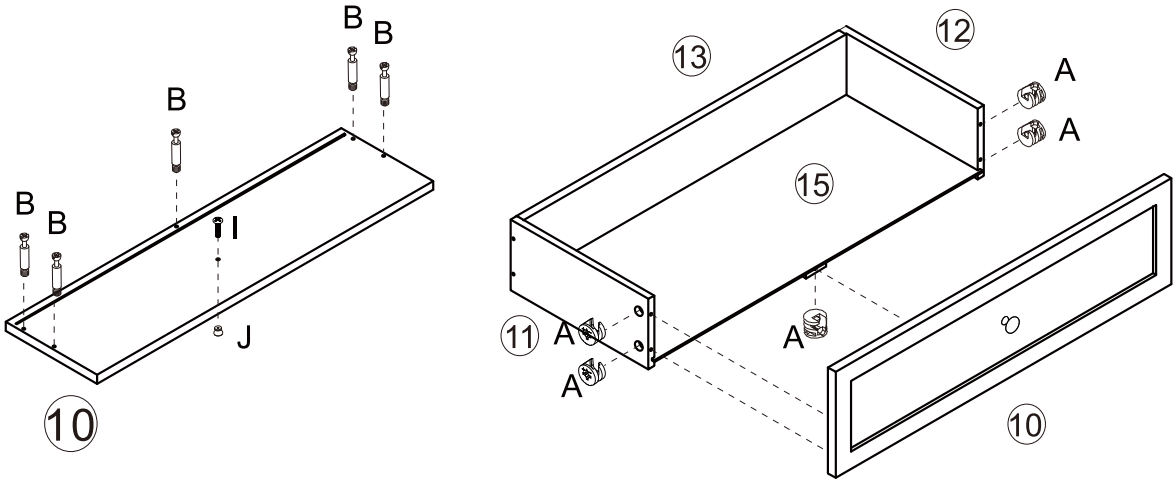

14

F	DL	DR
x 4	x 1	x 1

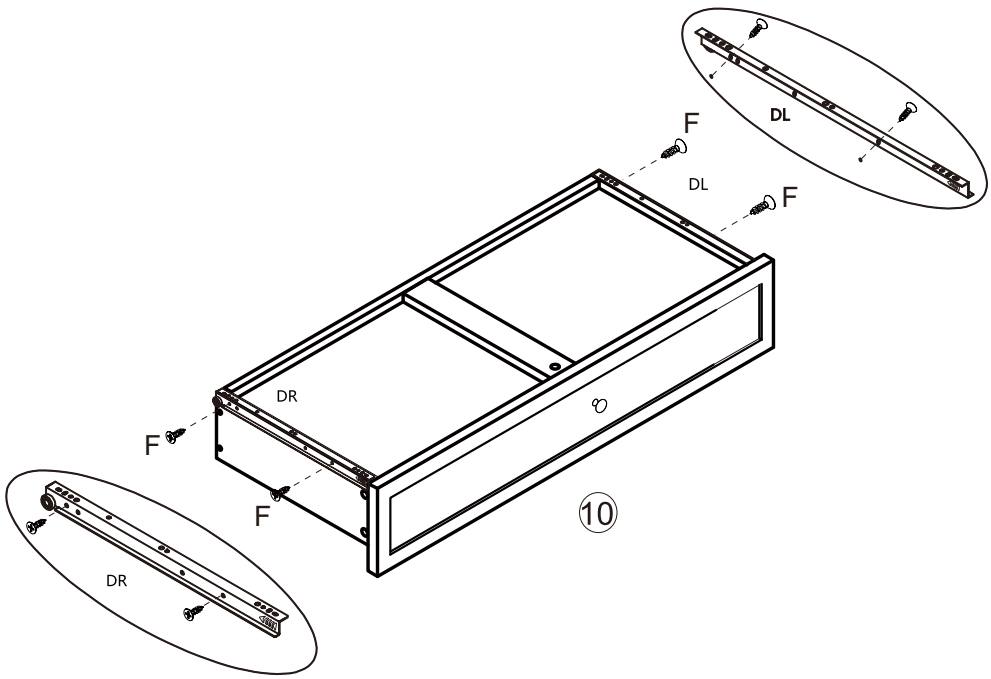

15

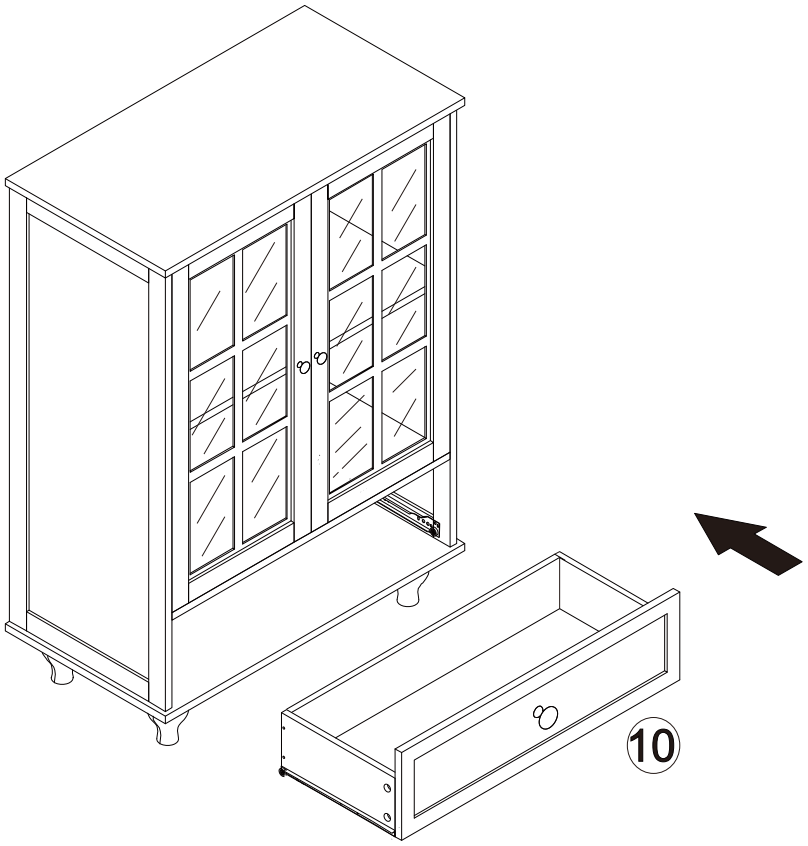

16

E	N	O	P
x 4	x 2	x 2	x 2

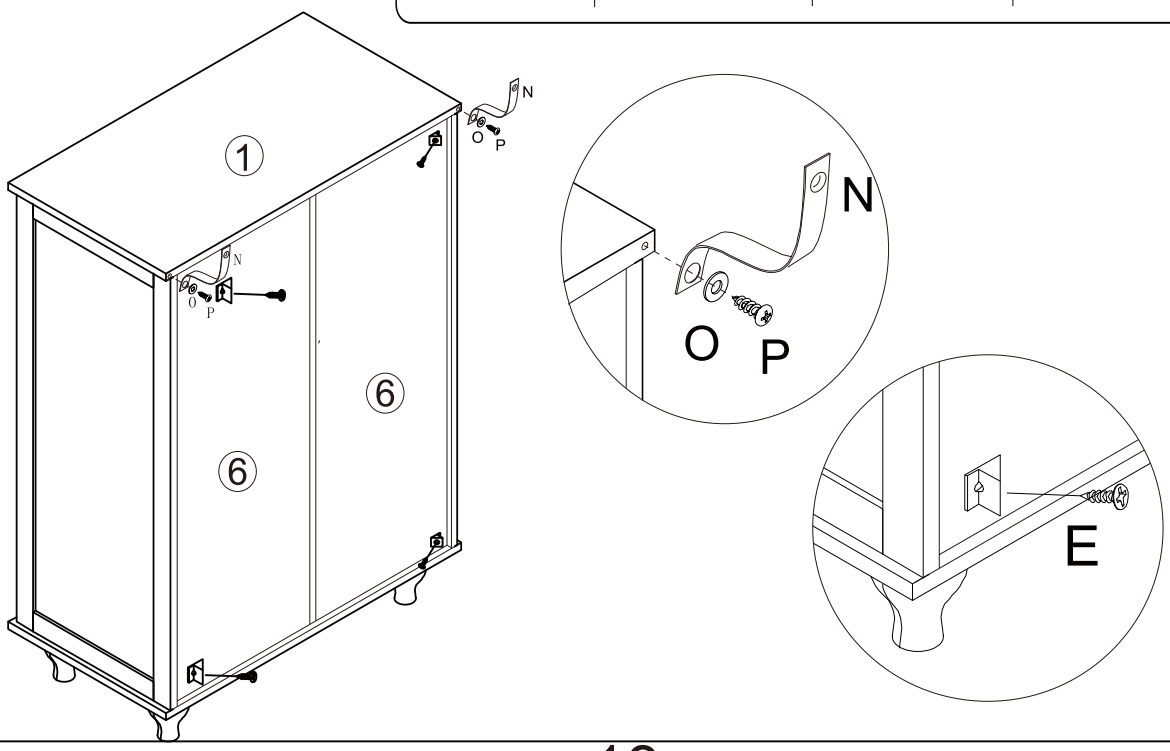

17

D	O	Q
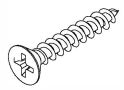		
x 2	x 2	x 2

