Floor standing clothes hanger

1

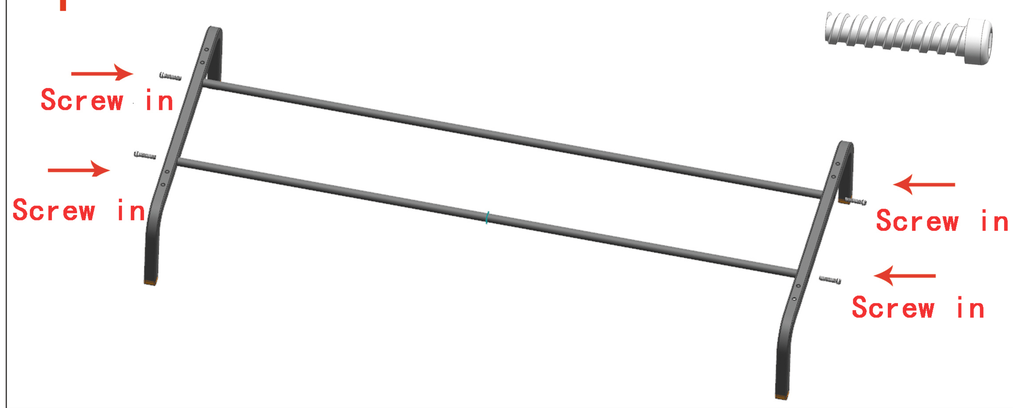

2

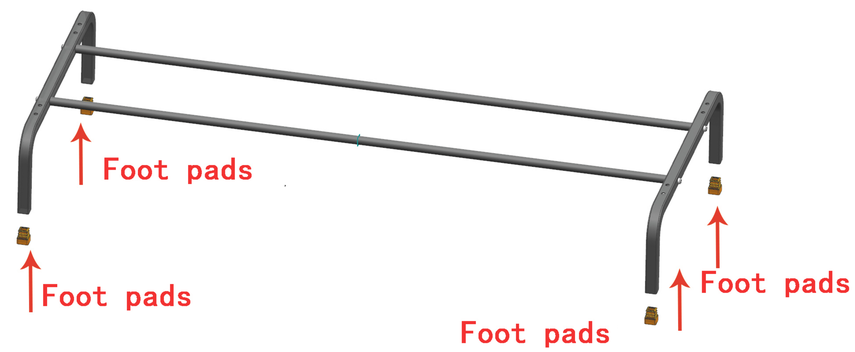

3

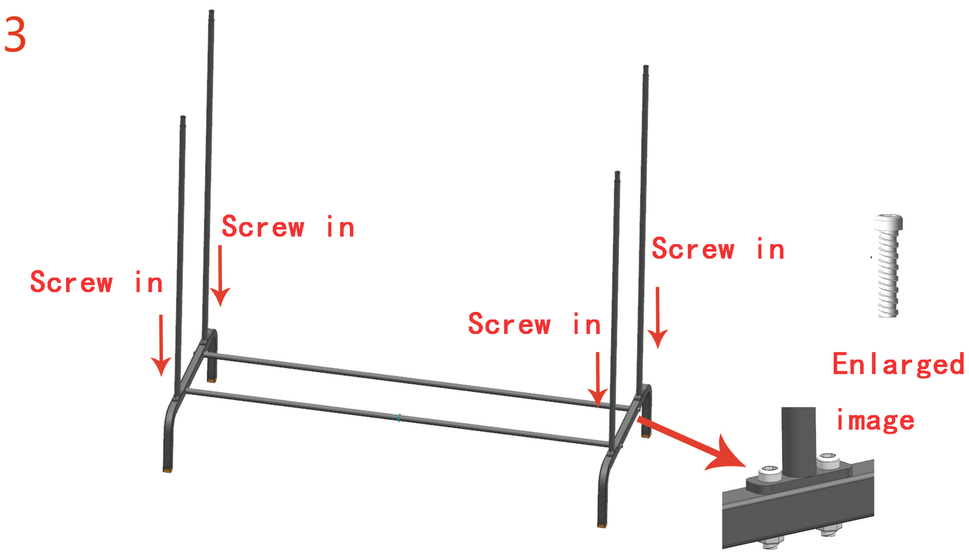

4

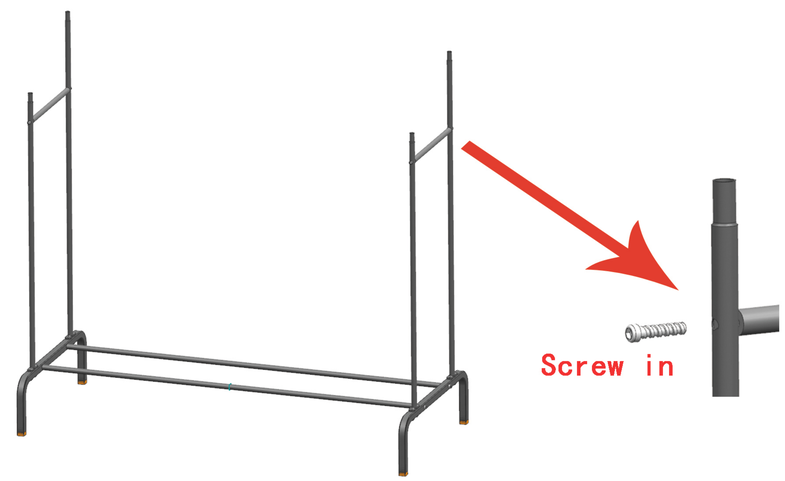

5

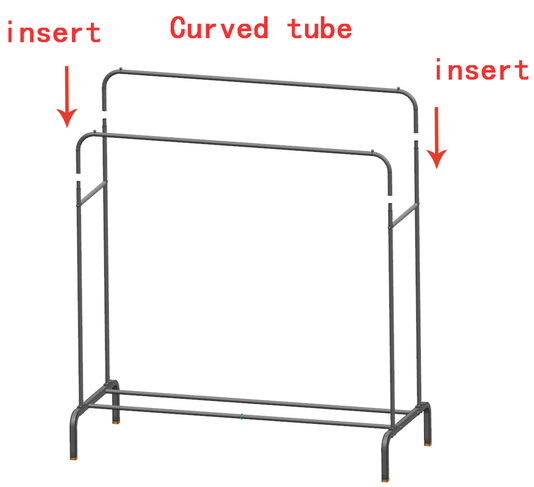
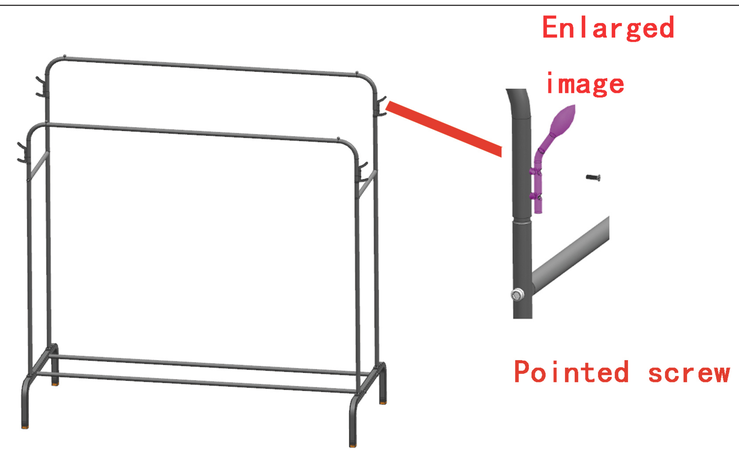
6