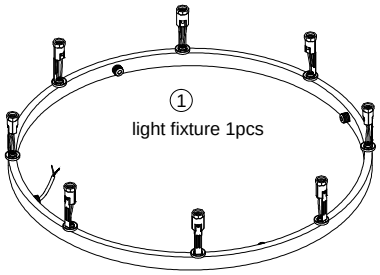

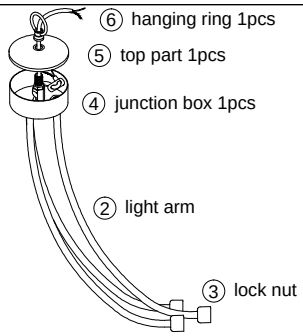

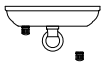

⑨ canopy 1pcs

⑩ cap nut 2pcs

⑧ chain 1pcs

⑬
cylinder tube
D0030-4 4pcs
D0030-8 8pcs

⑦
splicing connector 2pcs

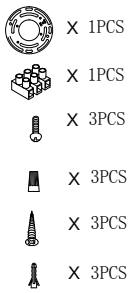

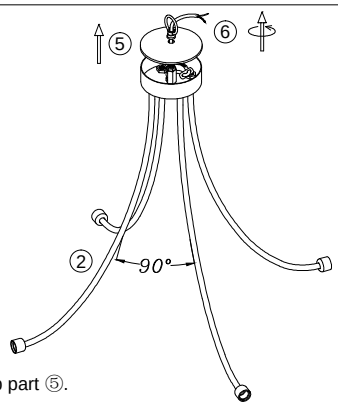

1.Adjust the angle of the light arms ②.
2.Loosen hanging ring ⑥ and remove the top part ⑤.

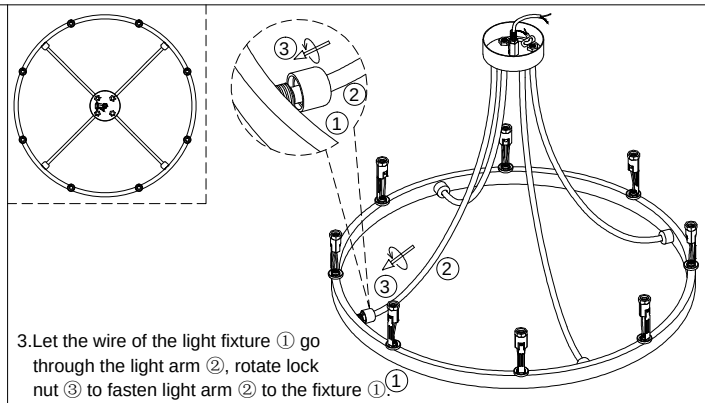

3.Let the wire of the light fixture ① go through the light arm ②, rotate lock nut ③ to fasten light arm ② to the fixture ①.

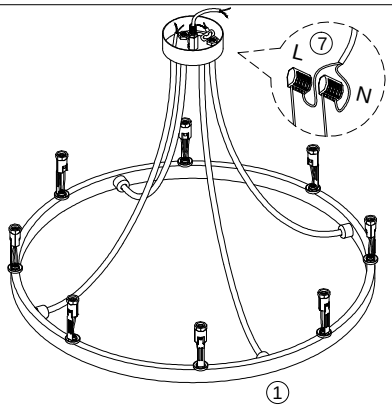

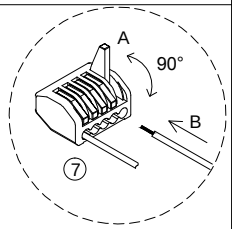

1.Pull the orange operating handle A to open the inlet hole, insert the wire B.
2.Press the operating handle A to finish wiring.
(Note: one inlet hole can put 2 or 3 wires inside)

4.Connect the wires by parallel with splicing connector ⑦.
(live line-L use one connector, neutral Line-N use another connector).

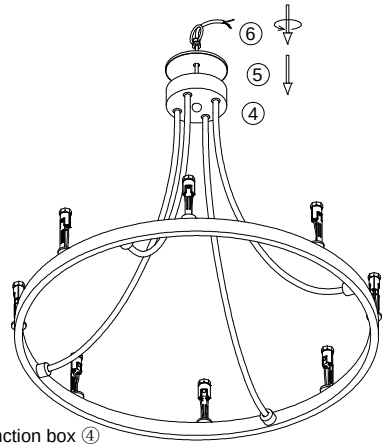

5.Fixed the top part ⑤ to the junction box ④ by rotated haning ring ⑥.

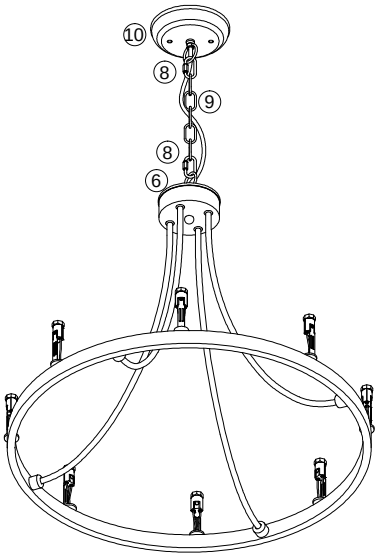

6.Connect the fixture and the canopy ⑨ with chain ⑧, let the wire go through the chain ⑧ and the canopy ⑨.

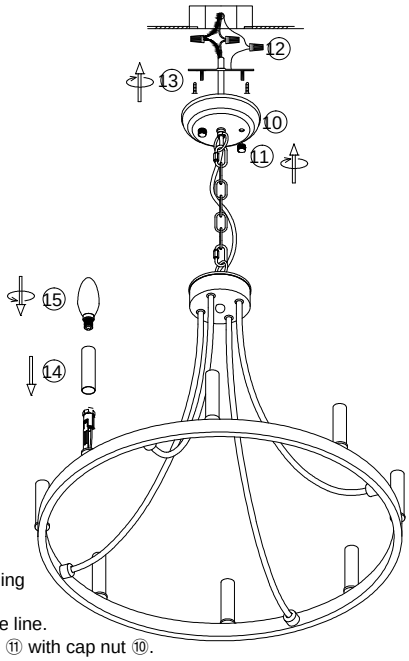

7.Install the bracket ⑪ to the ceiling junction box with screw.
8.Connect the wires to your home line.
9.Install the fixture to the bracket ⑪ with cap nut ⑩.
10.Put the cylinder tube ⑬ on the bulb holder, install the bulb ⑭.

Please read carefully before installation!!!
Note : Please make sure that the electricity is powered off during installation !
Only a professional electrician should install this kind of product !