HLG165

Version:1.0

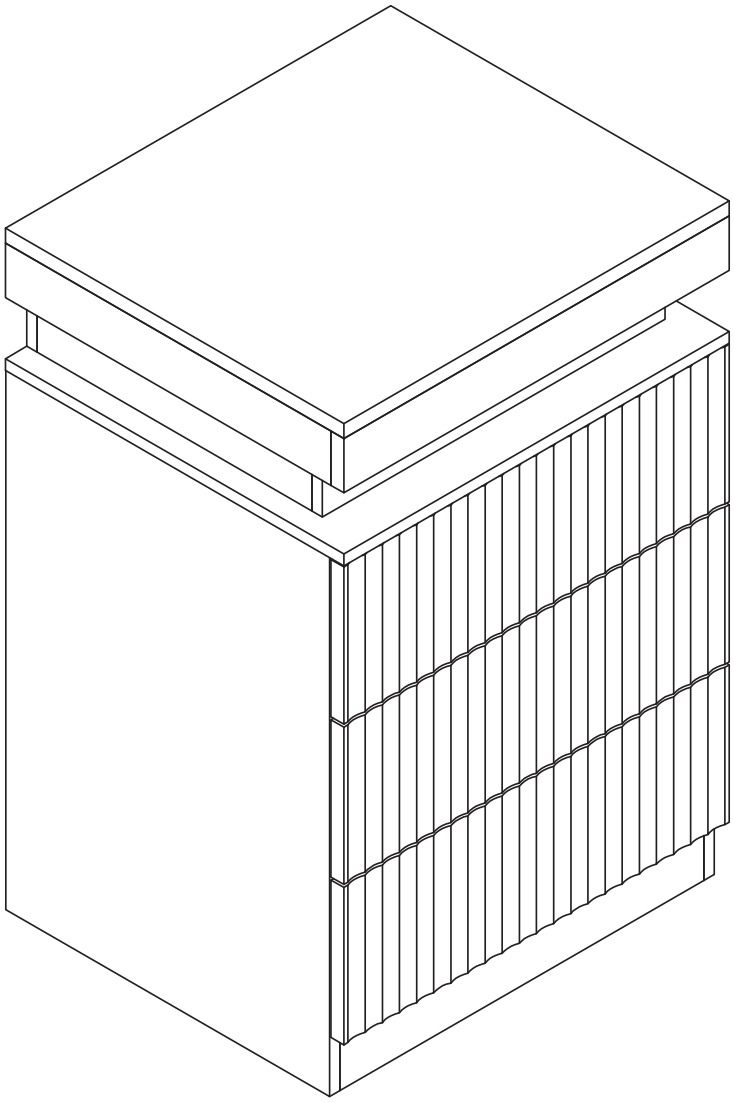

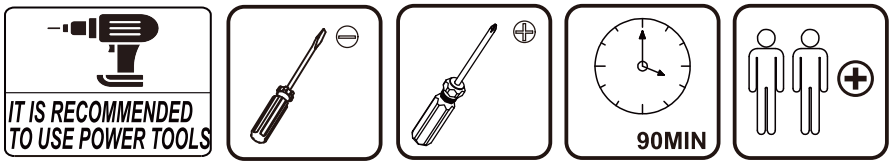

***EN*_IMPORTANT, RETAIN FOR FUTURE REFERENCE: READ CAREFULLY.**

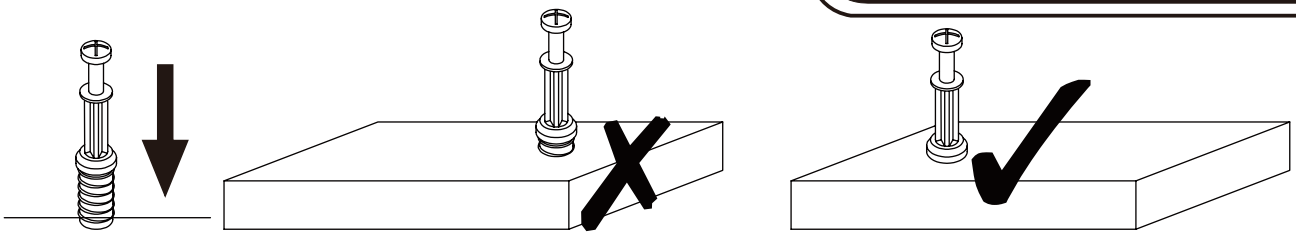

EN_QUICKFIT: Tighten quickfit until shoulder is flush with panel.Do not overtighten or undertighten.

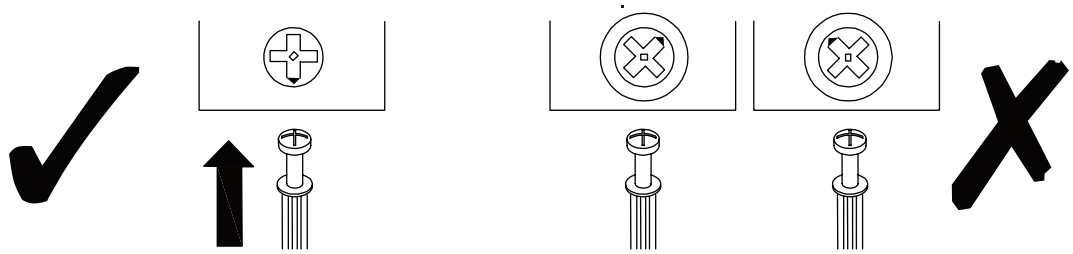

EN_CAM LOCK: When fitting cam lock, ensure starting position is correct before you insert connecting quickfit.

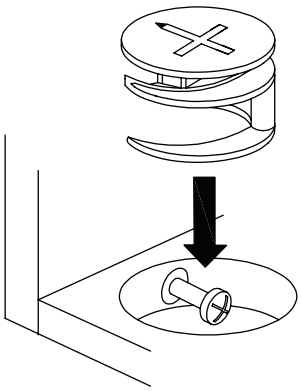

EN_ Quickfit head should be in the centre of the cam lock when the two panels are joined.
Cam lock should be inserted before quickfit.

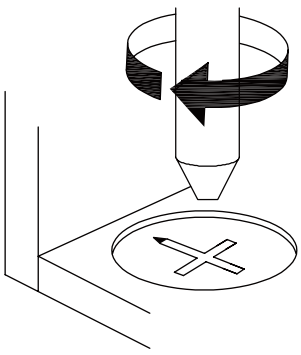

EN_ Turn cam lock clockwise to tighten.

NO.	PARTS	QTY	SPARE
①	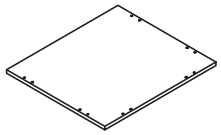	x1	
②	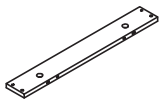	x1	
③	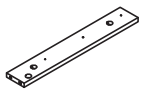	x1	
④	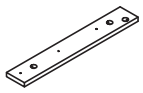	x1	
⑤	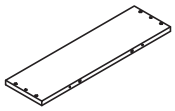	x1	
⑥	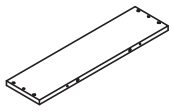	x1	
⑦	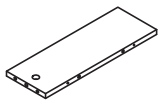	x1	
⑧	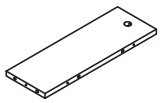	x1	
⑨	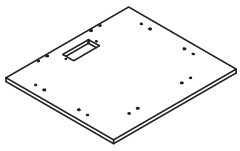	x1	
⑩	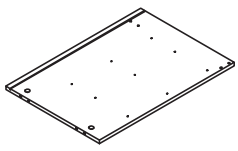	x1	
⑪	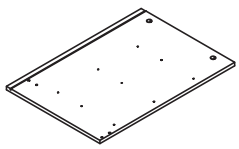	x1	

NO.	PARTS	QTY	SPARE
⑫	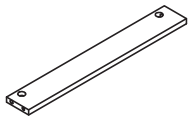	x1	
⑬	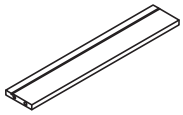	x1	
⑭	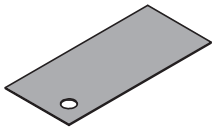	x1	
⑮	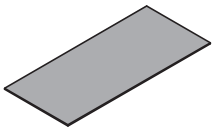	x1	
⑯	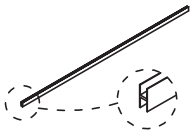	x1	
⑰	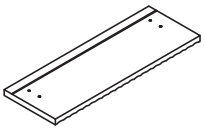	x3	
⑱	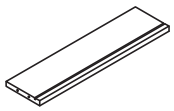	x3	
⑲	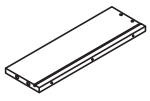	x3	
⑳	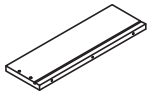	x3	
㉑	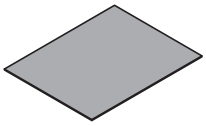	x3	
	 Hardware Kit	x1	

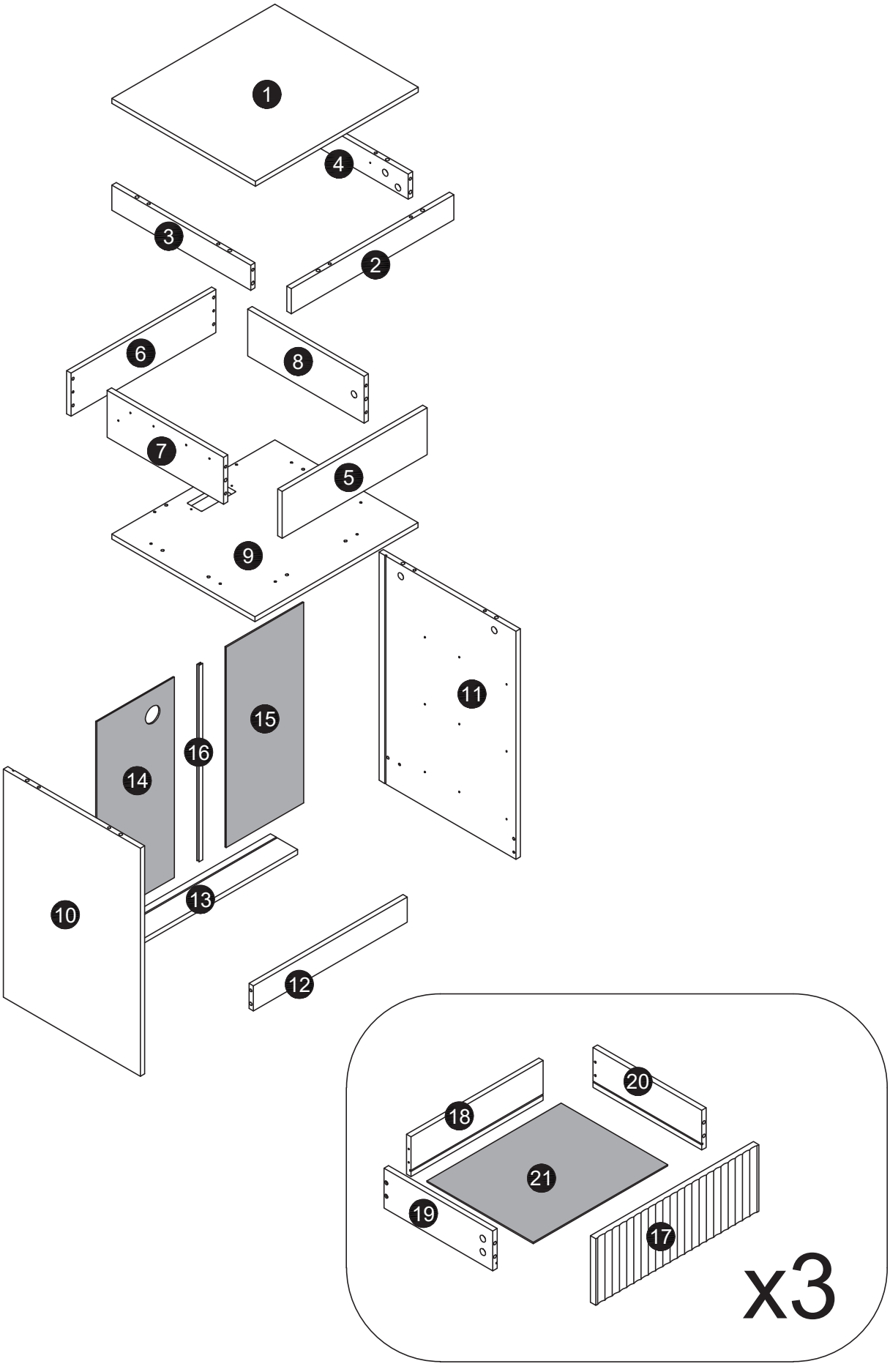
1
4
3
2
6
8
7
5
9
11
15
16
14
10
13
12
20
18
21
19
17
x3

HARDWARE

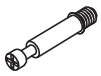 A x30 Ø6x35mm +3(spare)	 B x30 Ø15x10mm +3(spare)	 C x32 Ø6x30mm +3(spare)	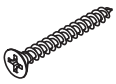 D x23 Ø4x35mm +2(spare)	 E x50 Ø3.5x12mm +5(spare)	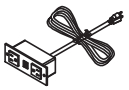 F x1
 G x2 Ø3.5x12mm	 H x1 Ø4x10mm H-1 H-2	 I x1	 J x1	 K x1 Ø4x14mm K-1 K-2	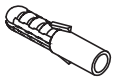 L x1
 M x4 Ø3x16mm +1(spare) M-1 M-2	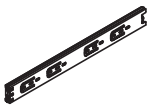 N x2				
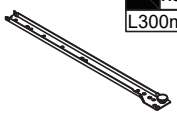 CL x3 L300mm	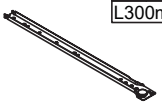 CR x3 L300mm	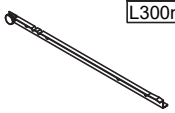 DL x3 L300mm	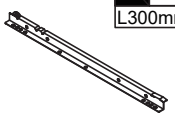 DR x3 L300mm		

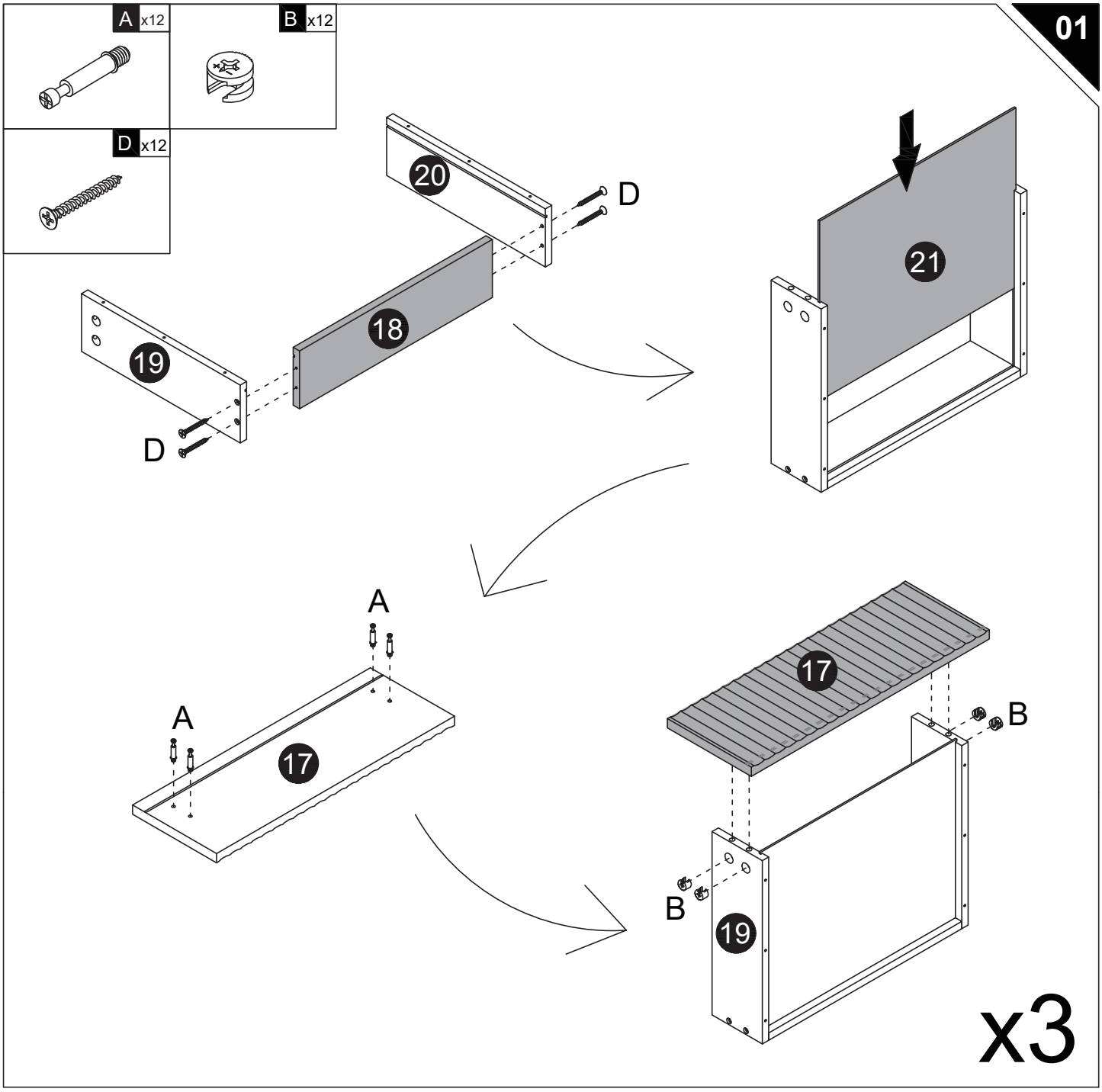
01
A x12
B x12
D x12
20
D
18
19
D
21
A
A
17
17
B
B
19
x3

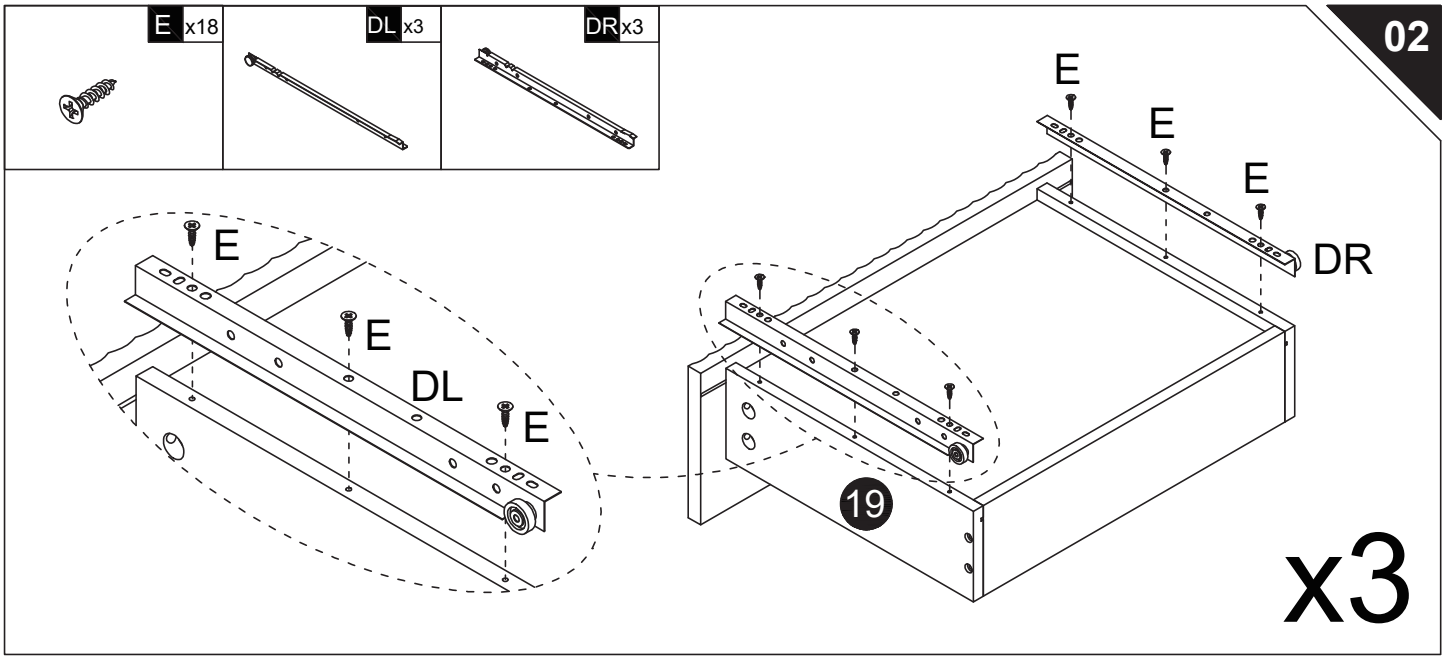
02
E x18
DL x3
DR x3
E
E
DL
E
E
E
E
DR
19
x3

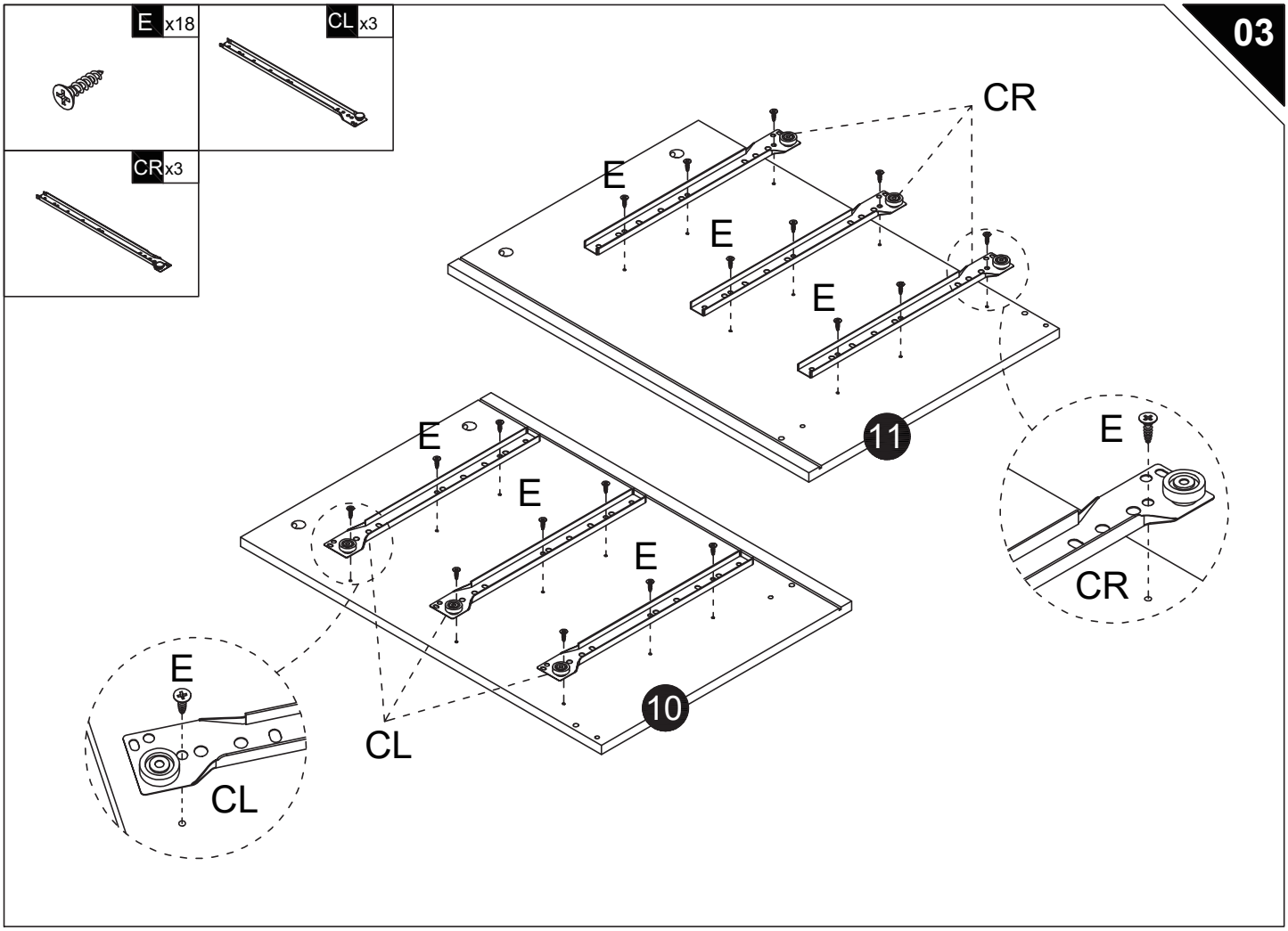
03
E x18
CL x3
CR x3
CR
E
E
E
11
E
E
E
E
10
CL
E
CL
E
CR

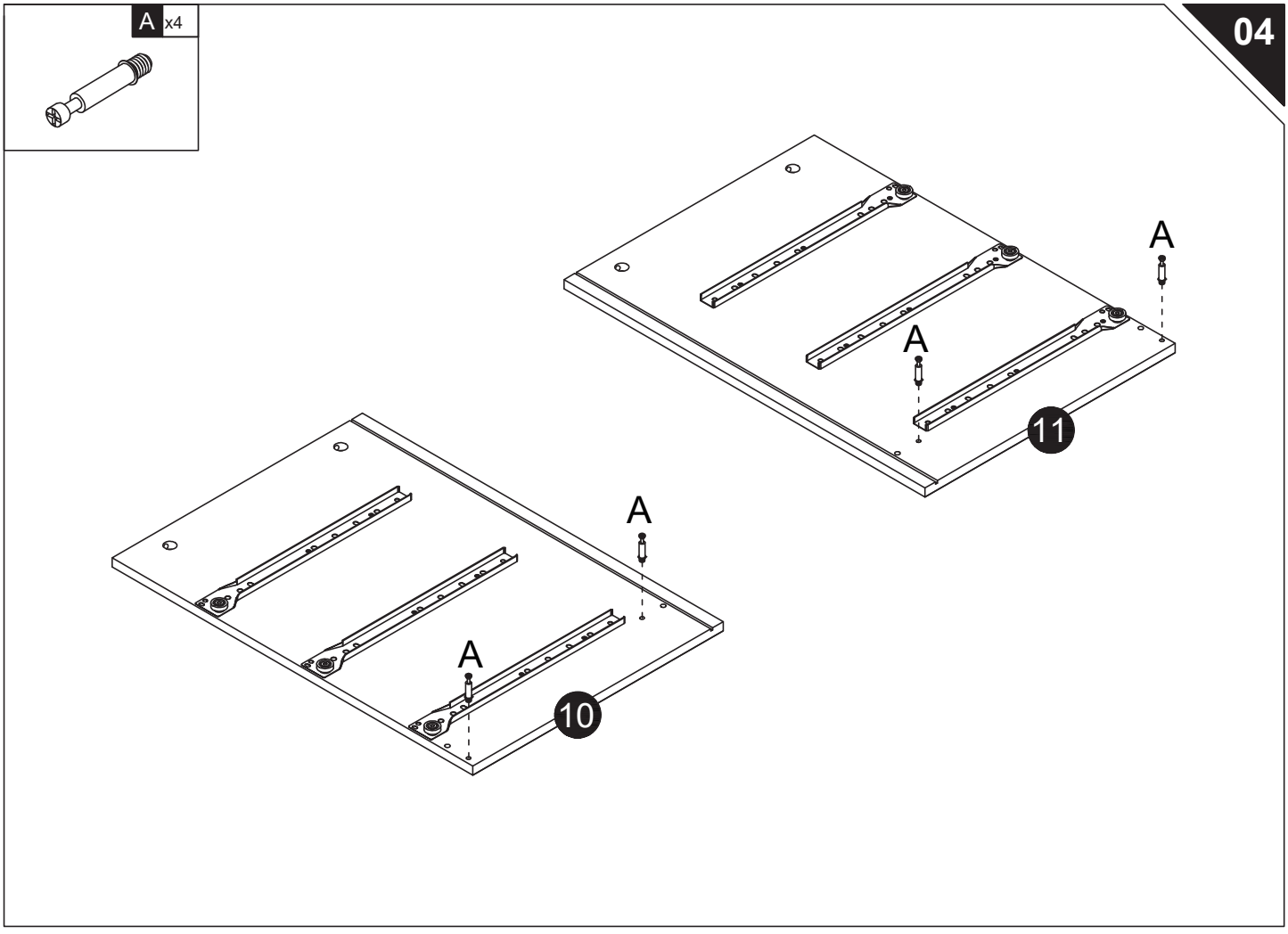
04
A x4
A
A
11
A
A
10

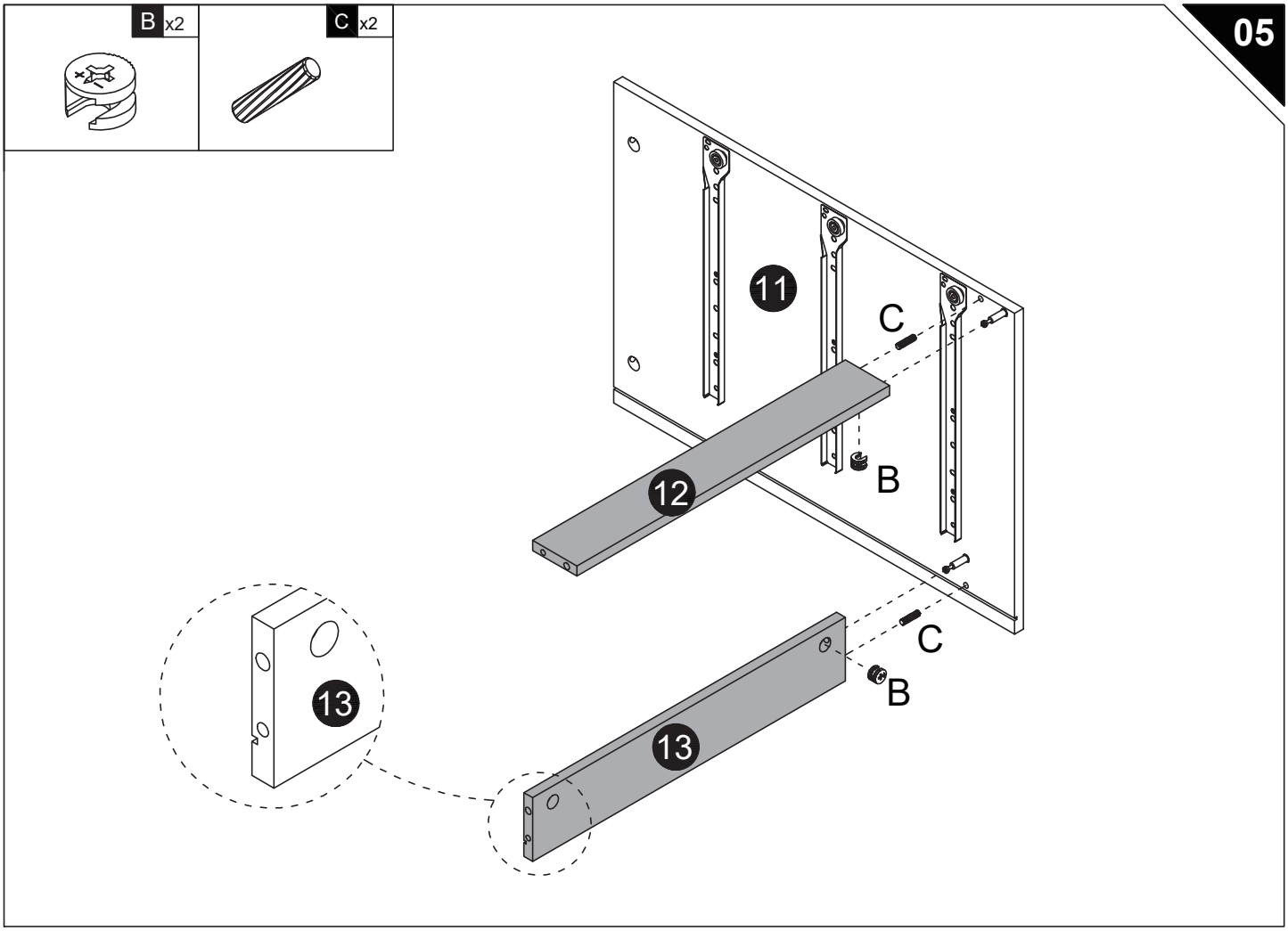
B x2
C x2
05
11
C
B
12
C
B
13
13

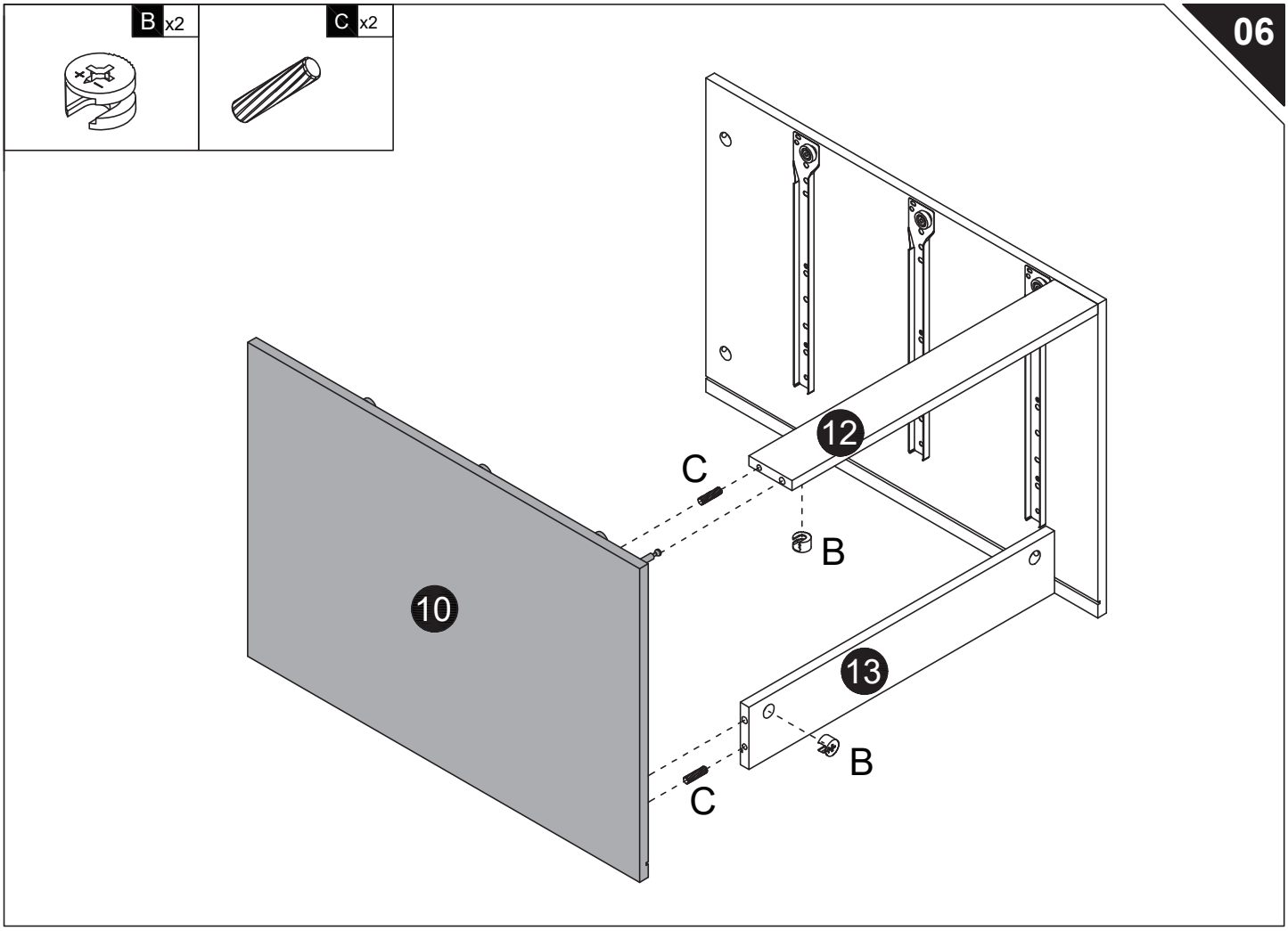
B x2
C x2
06
12
C
B
10
13
B
C

07

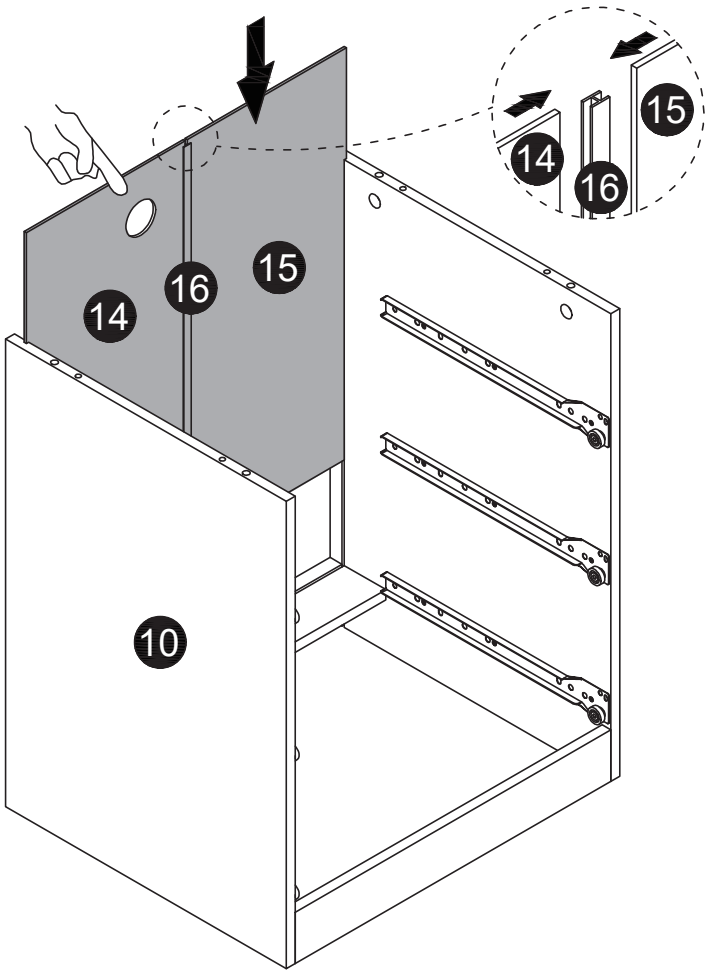

08

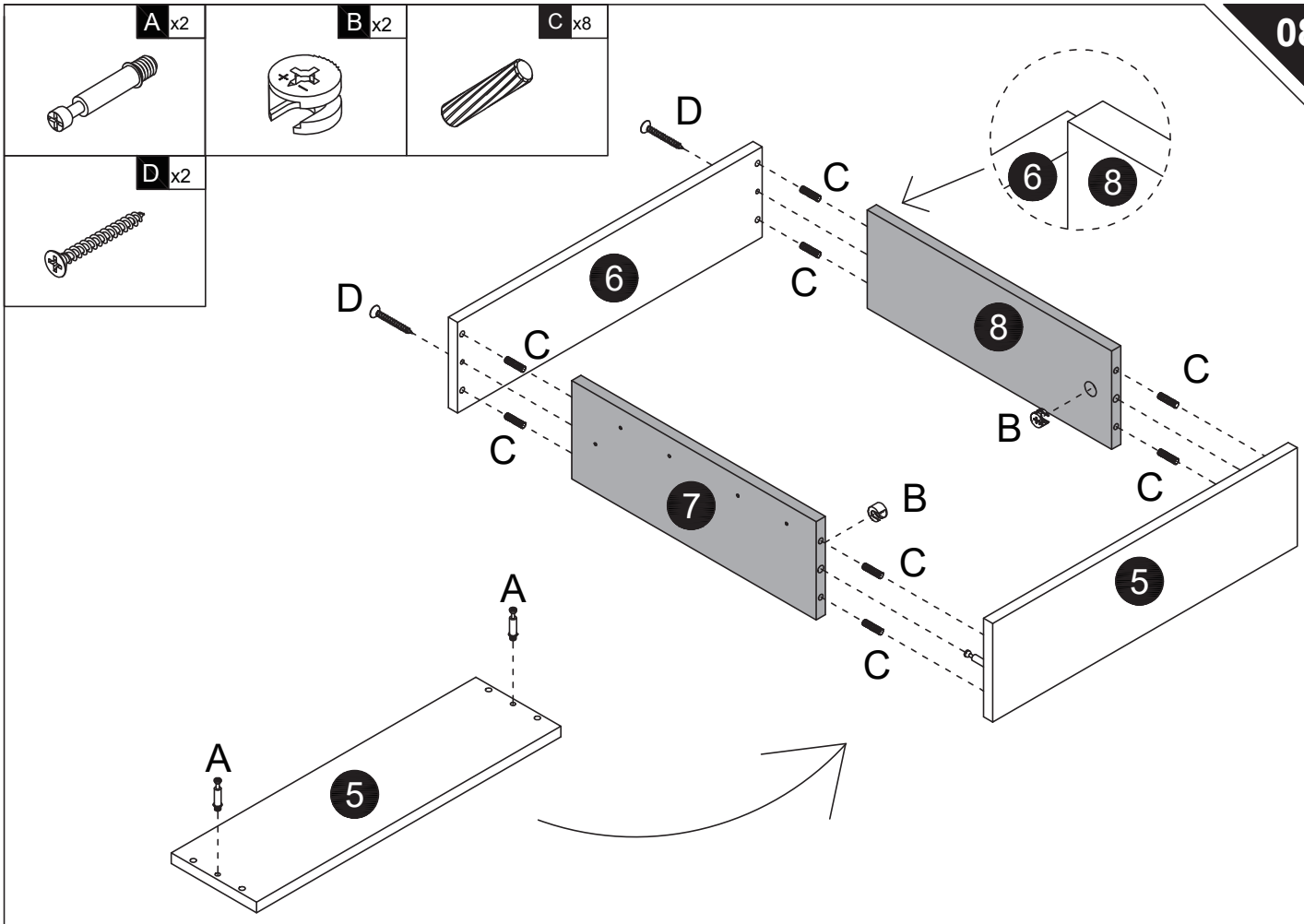

09

C x8



D x8



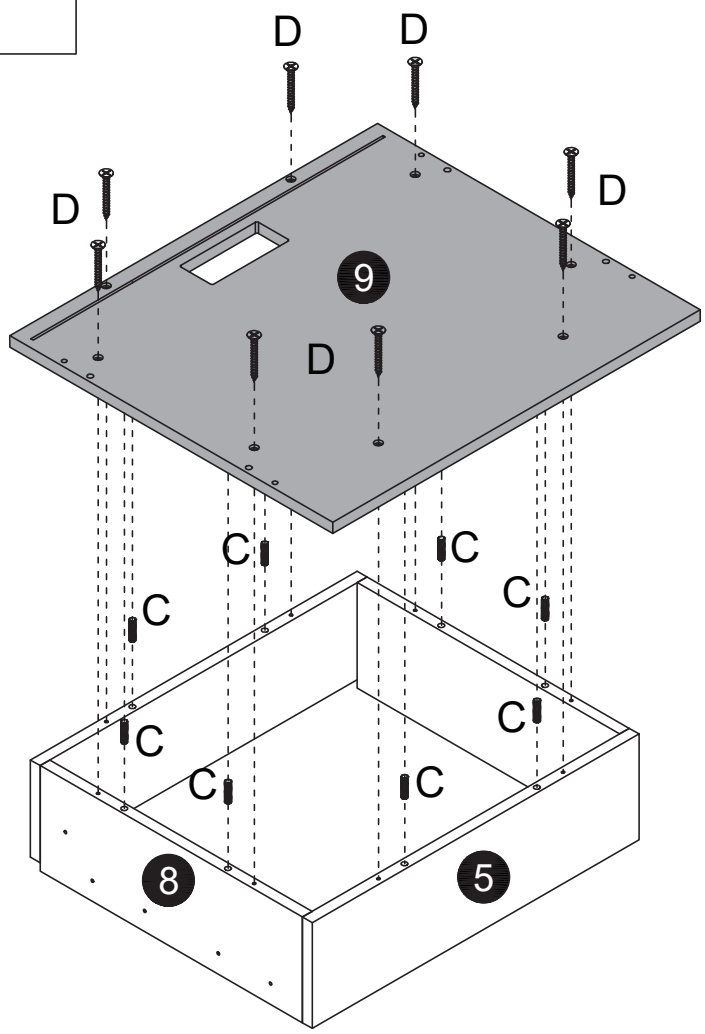

10

A x4

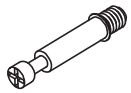

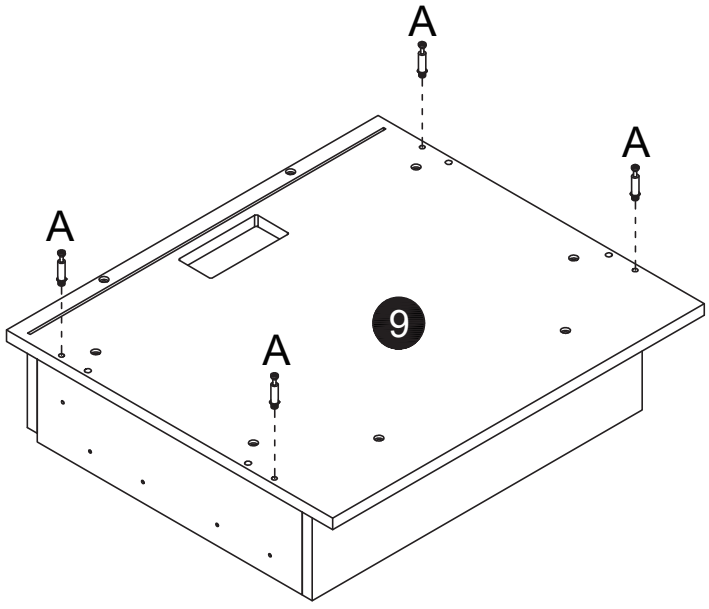

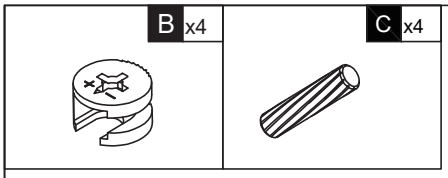
B x4
C x4

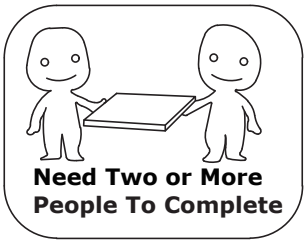
Need Two or More
People To Complete

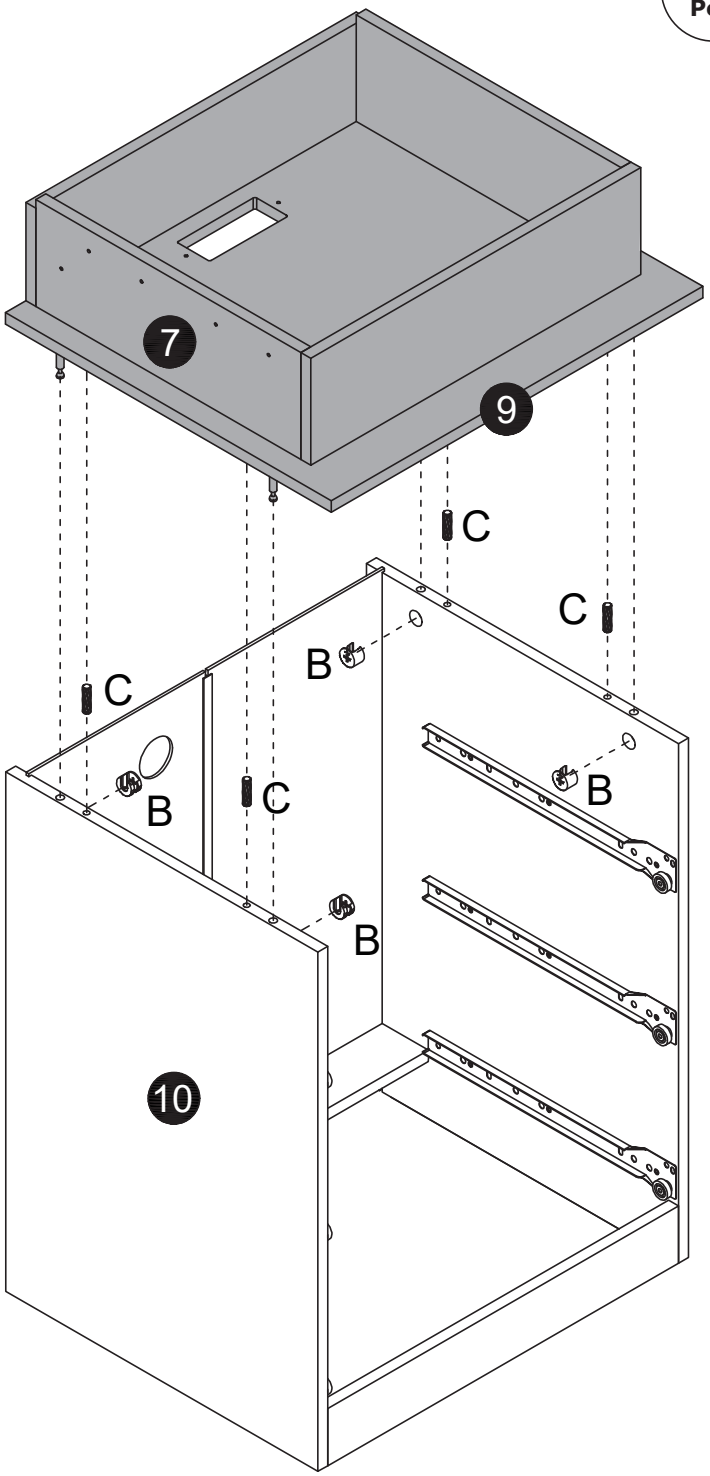
7
9
C
C
C
B
B
C
B
B
10

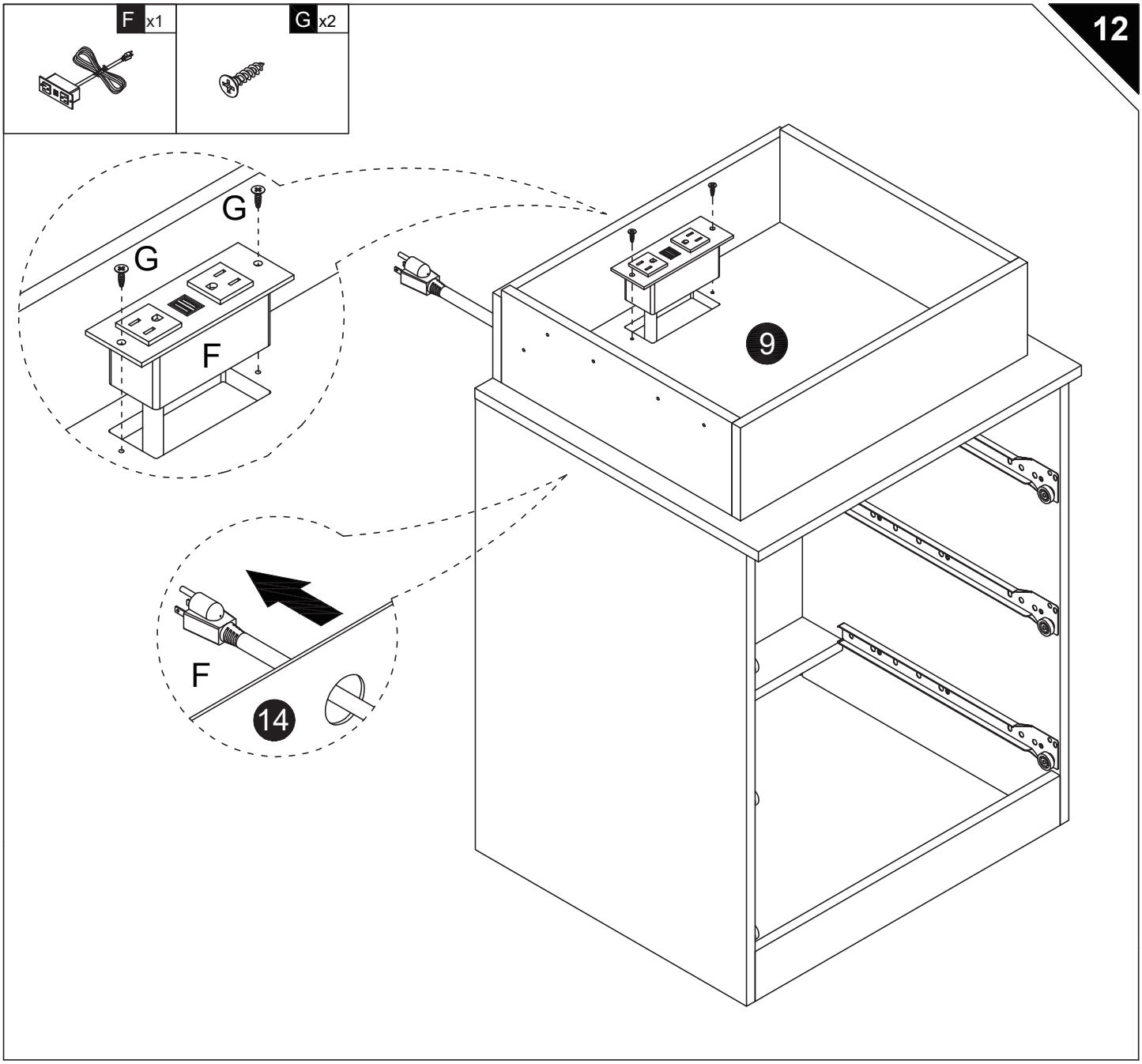
F x1
G x2
12
G
G
F
9
F
14

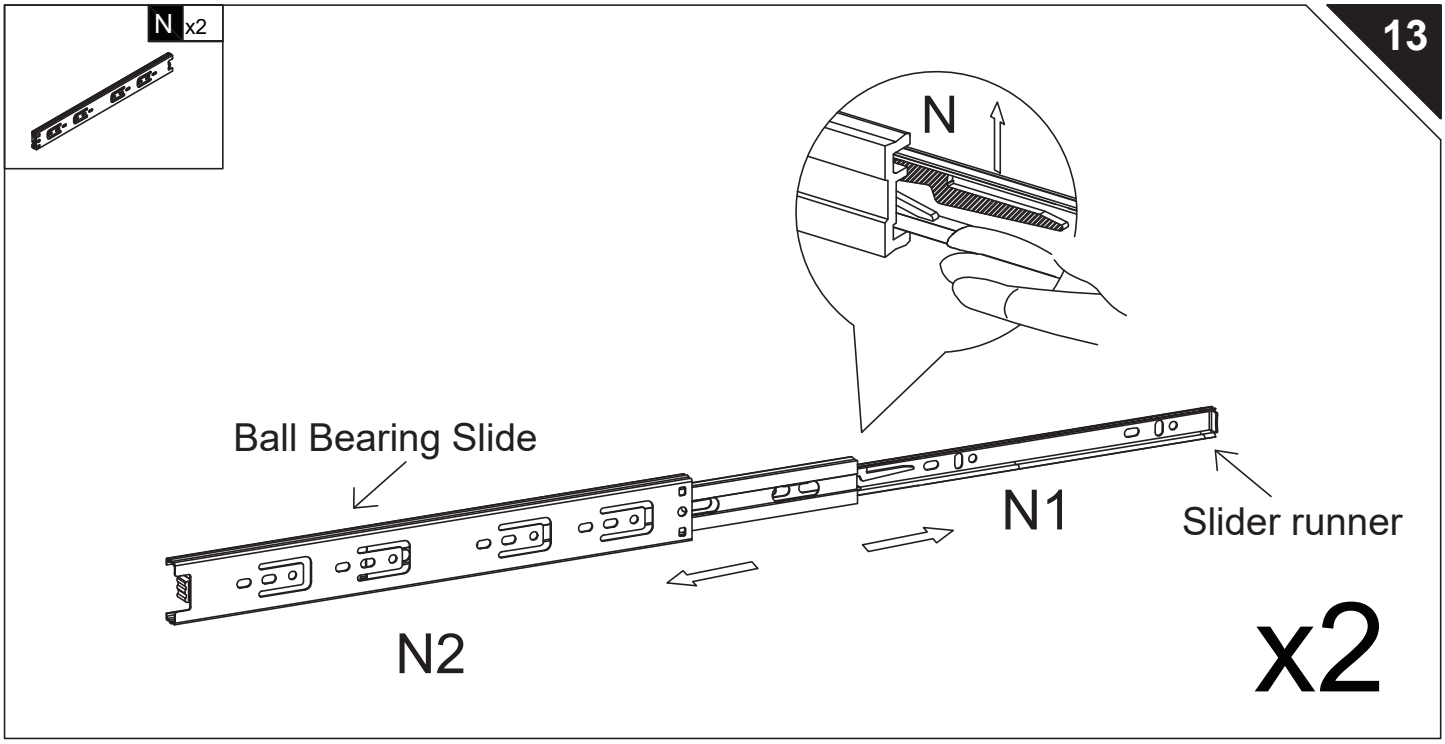
N x2
13
N
Ball Bearing Slide
N1
Slider runner
N2
x2

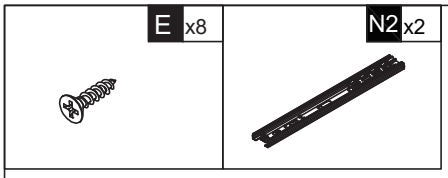
E x8
N2 x2

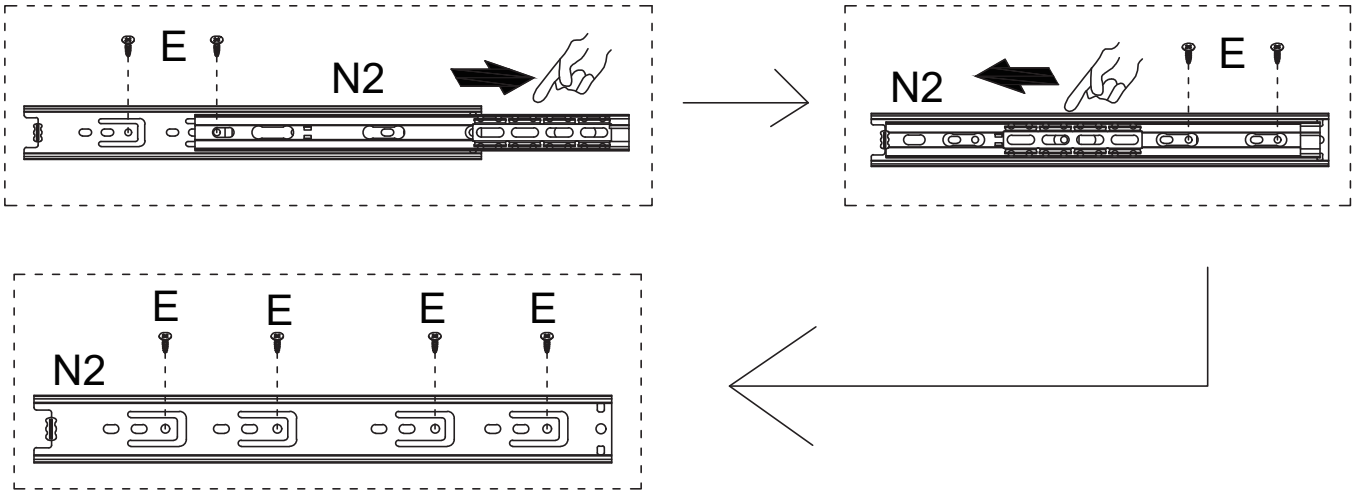
E
N2
N2
E
E
E
E
E
N2

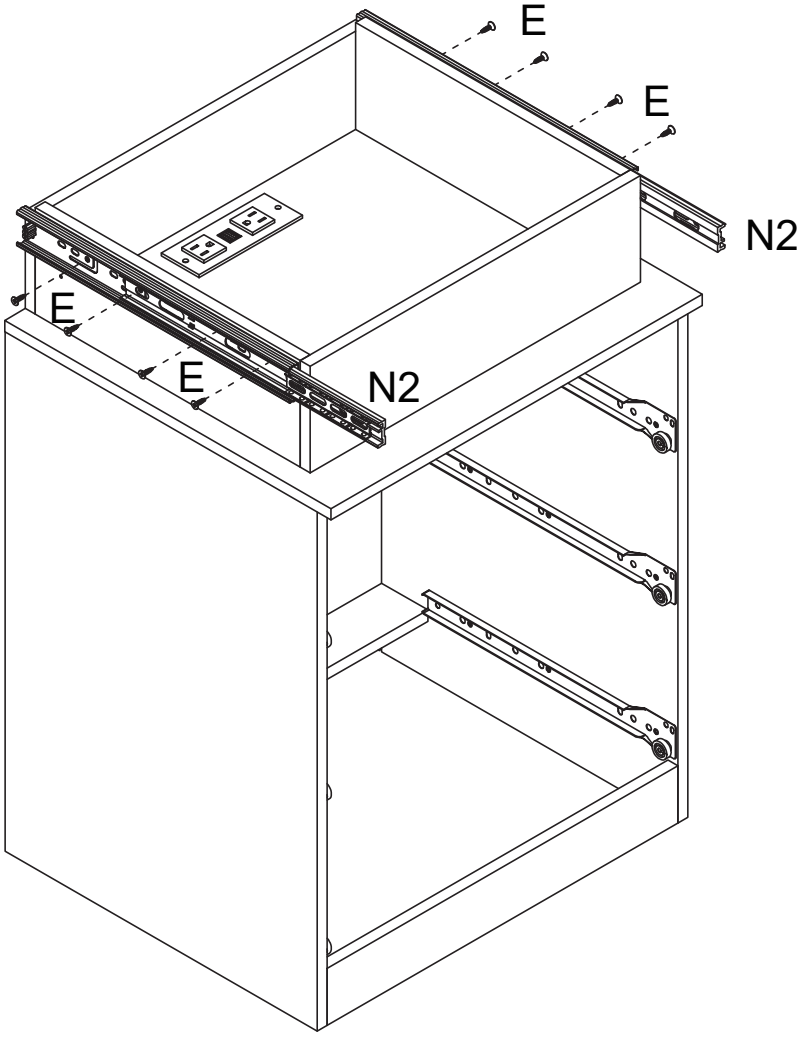
E
E
N2
E
E
N2

H x1



H-1 H-2

J x1



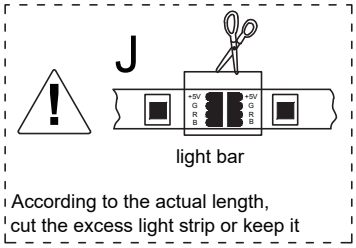
J
+5V
G
R
B
+5V
G
R
B
light bar
According to the actual length,
cut the excess light strip or keep it

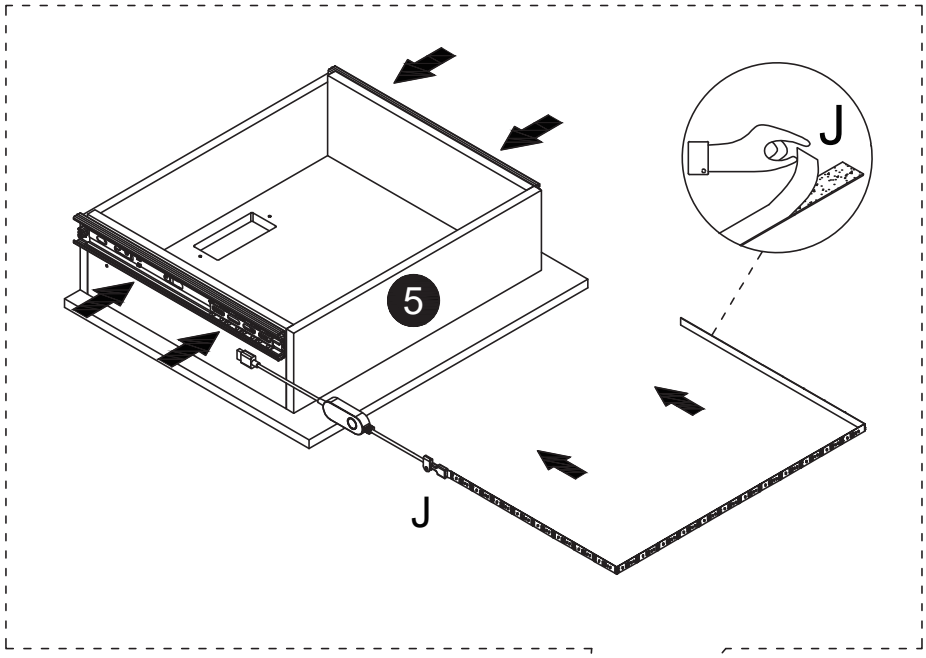
J
5
J

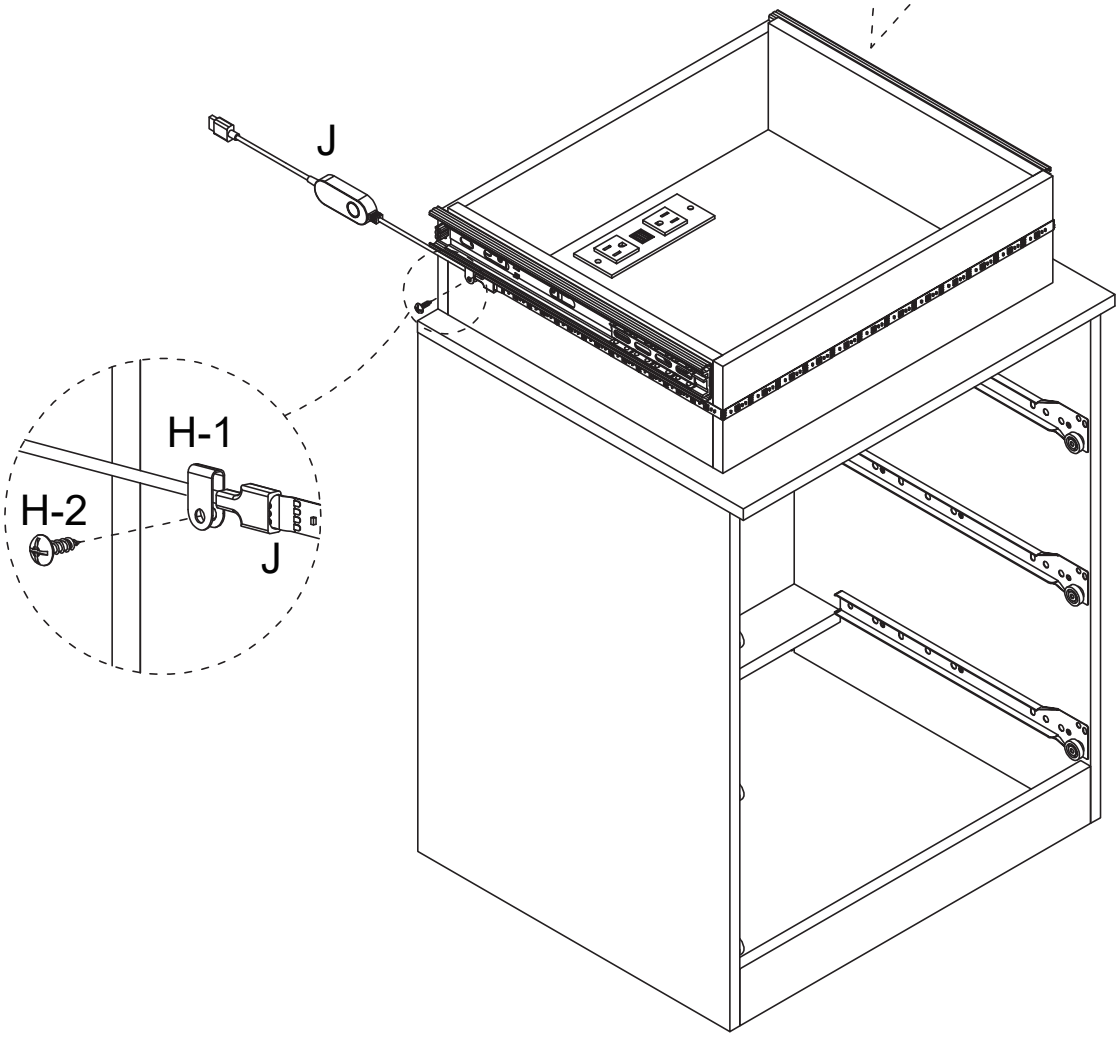
J
H-1
H-2
J

I x1



16

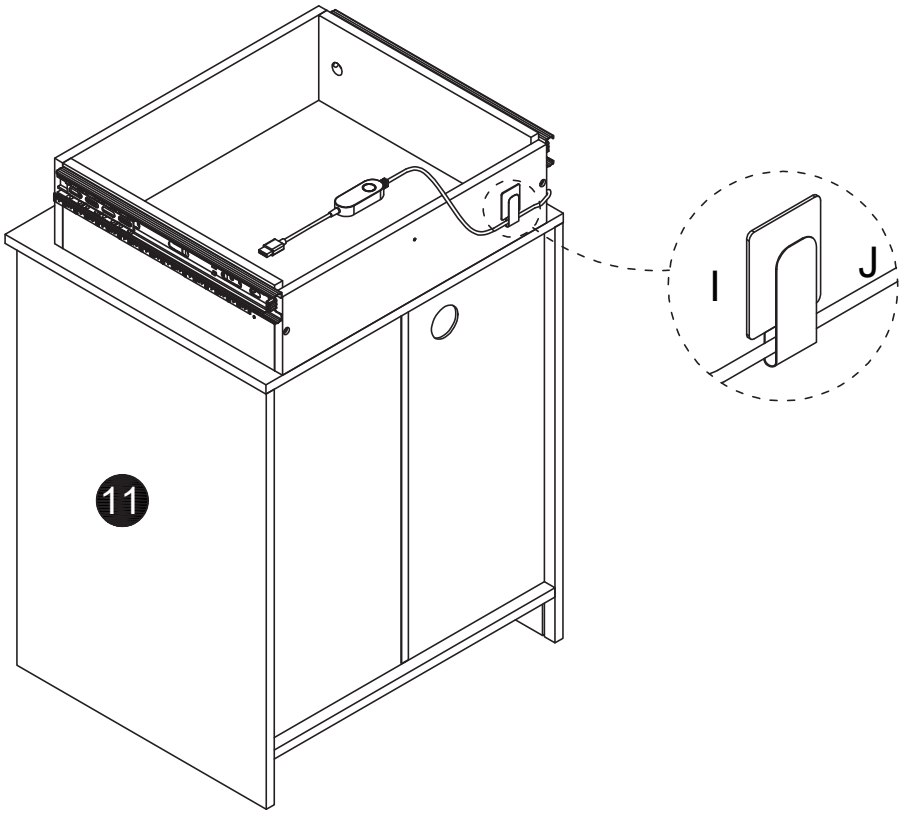

A x8

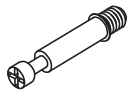

17

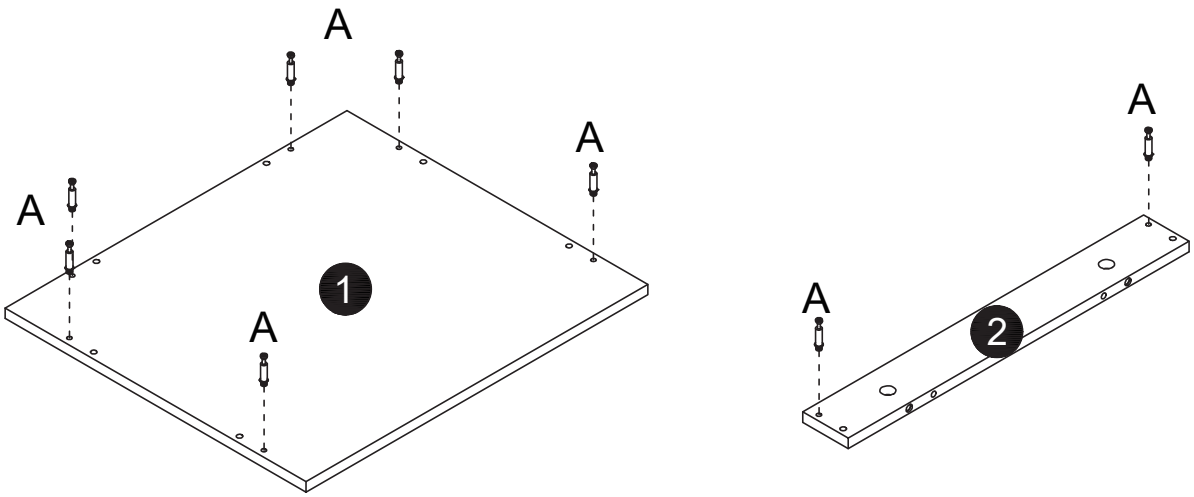

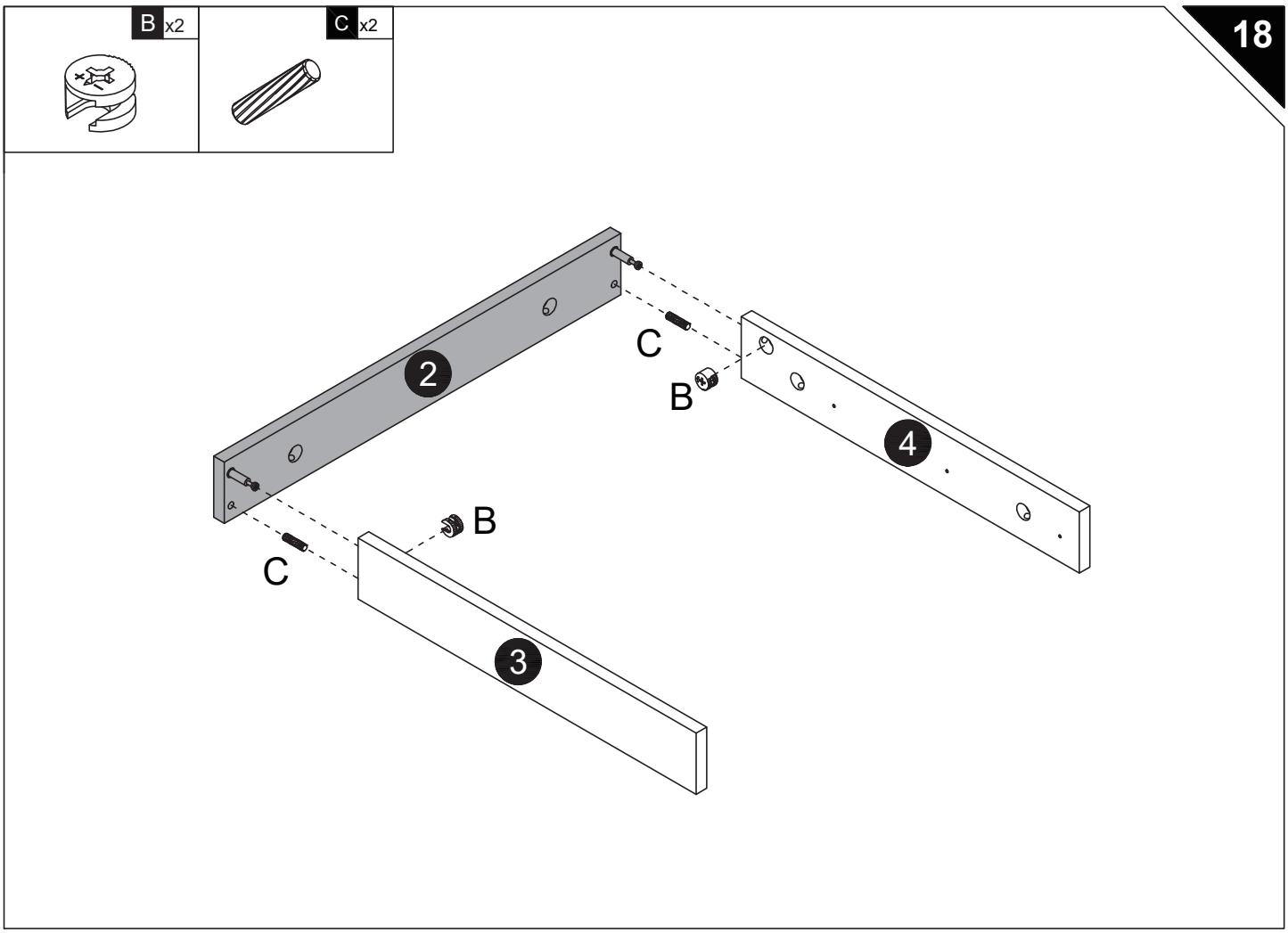
18
B x2
C x2
2
C
B
4
B
C
3

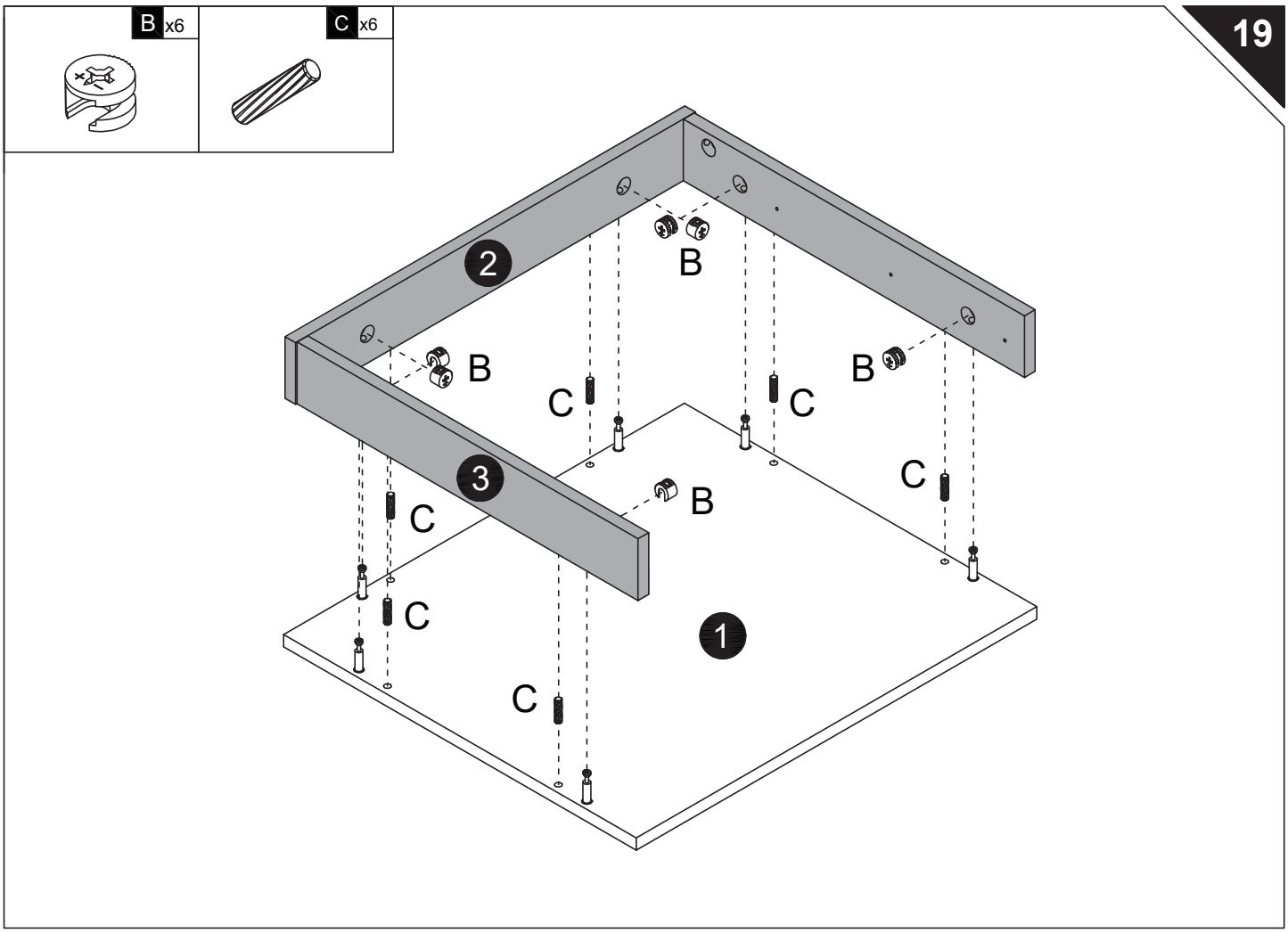
19
B x6
C x6
2
B
B
B
C
C
3
C
B
C
C
1
C

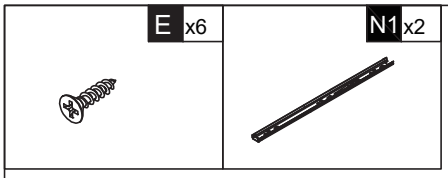
E x6
N1 x2

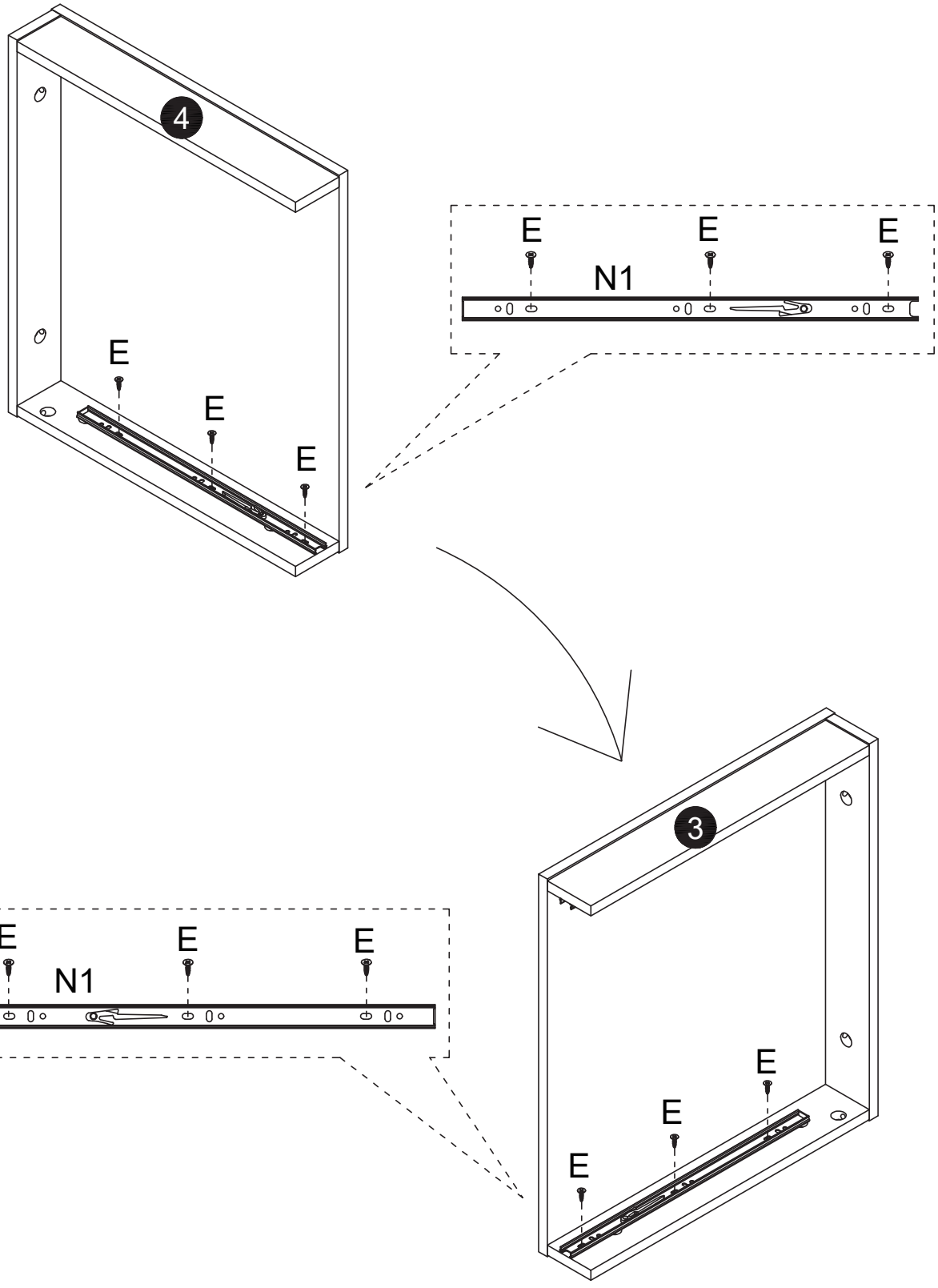
4
E
E
E
E
E
E
N1
3
E
E
E
E
E
E
N1

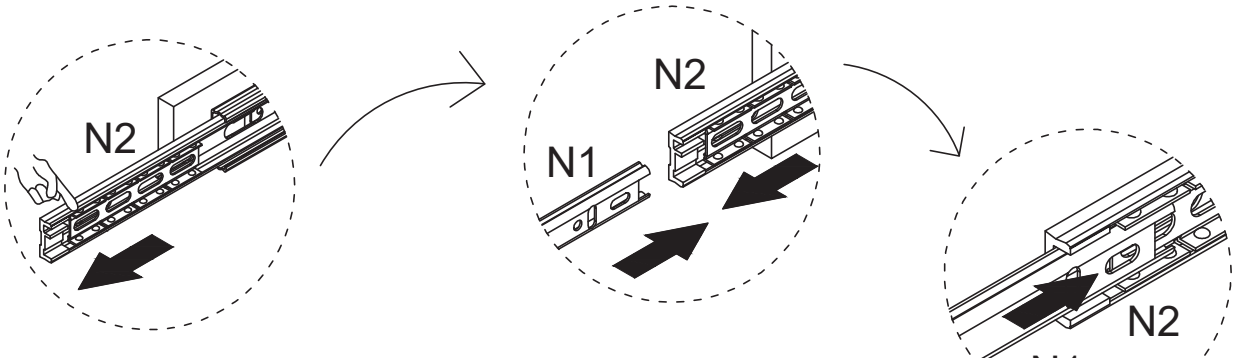
N2
N2
N1
N2
N1

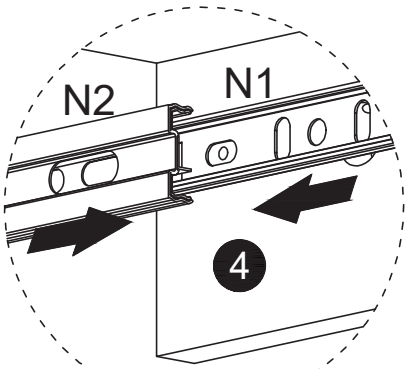
N2
N1
4

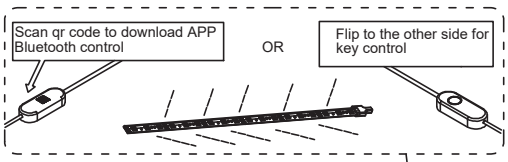
Scan qr code to download APP
Bluetooth control
OR
Flip to the other side for
key control

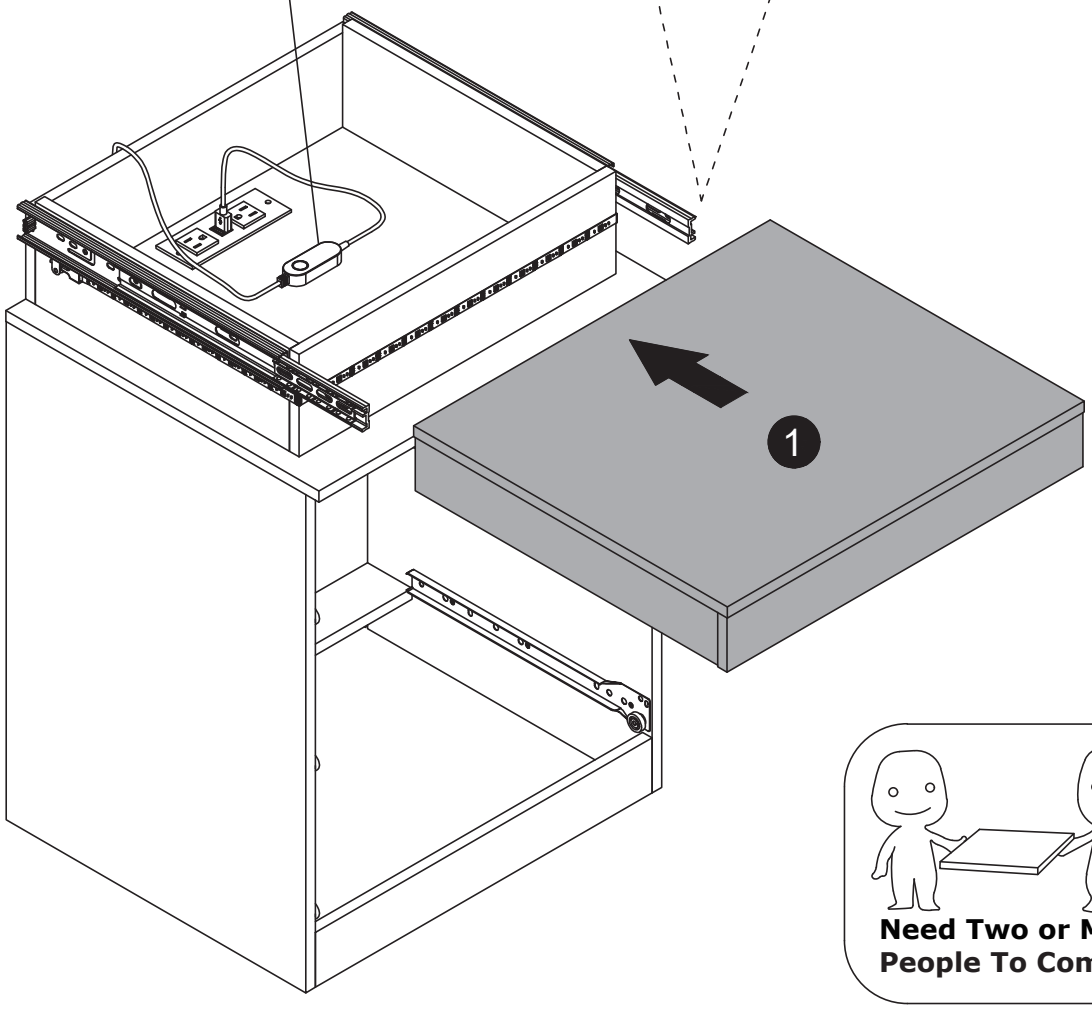
1

Need Two or More
People To Complete

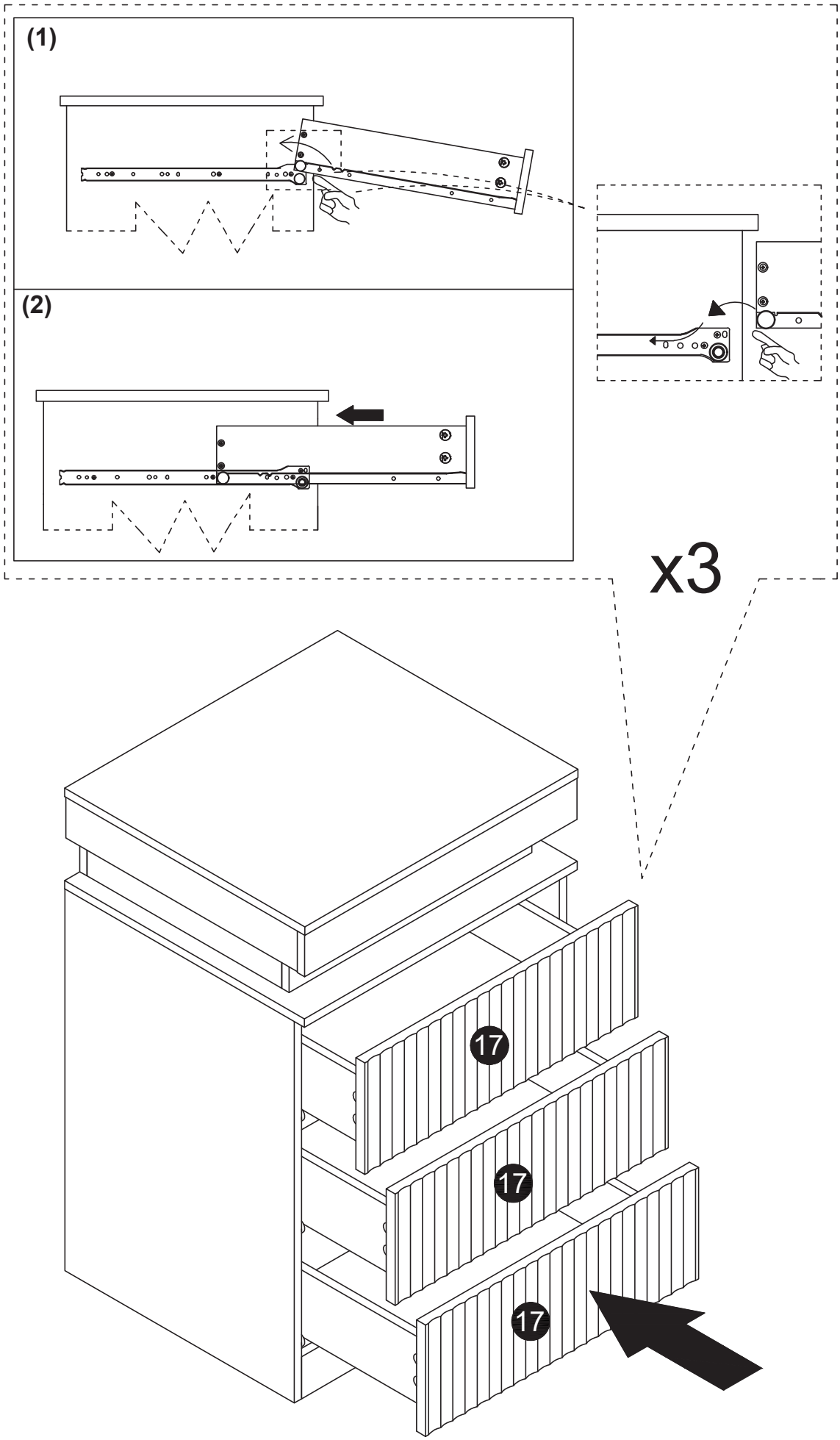
(1)
(2)
x3
17
17
17

M x4



M-1



M-2

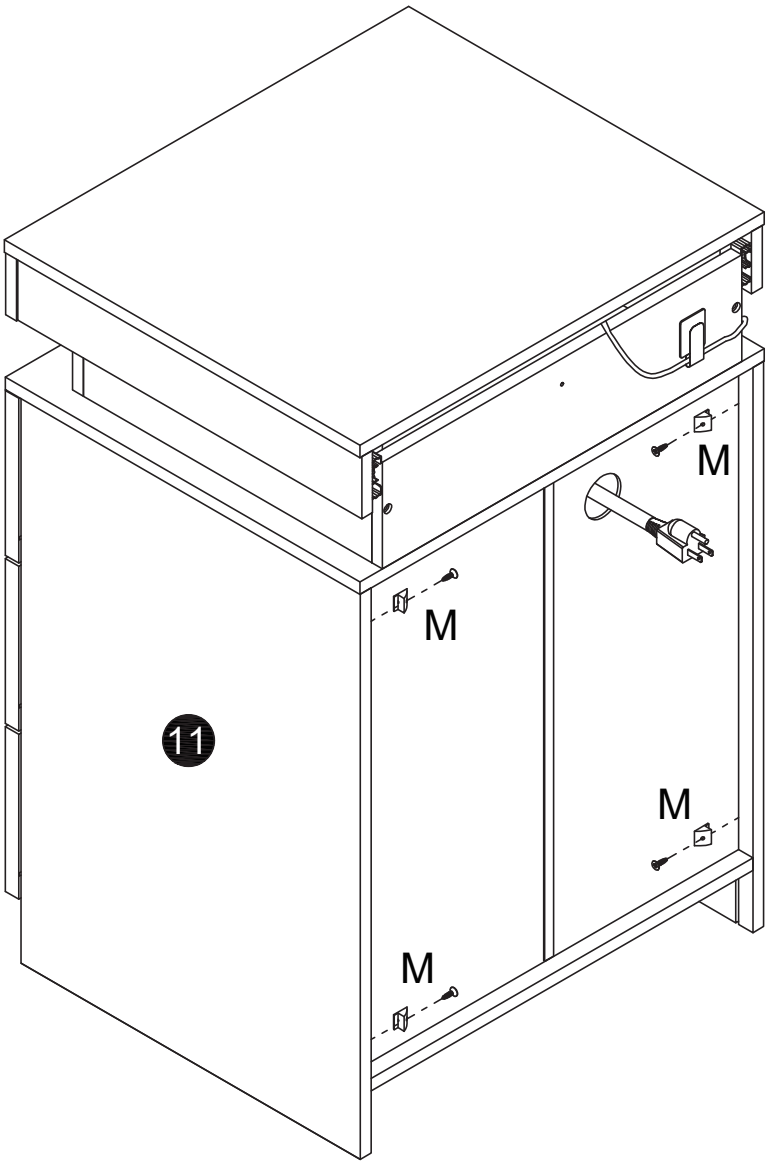

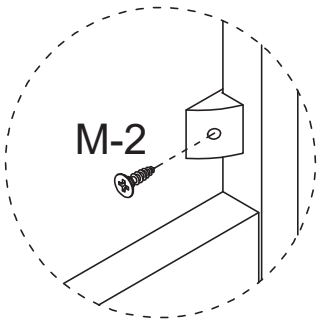

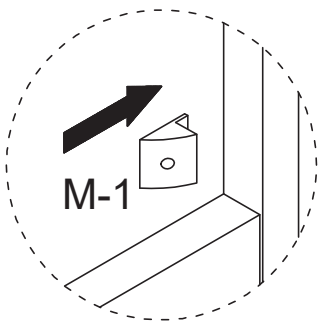

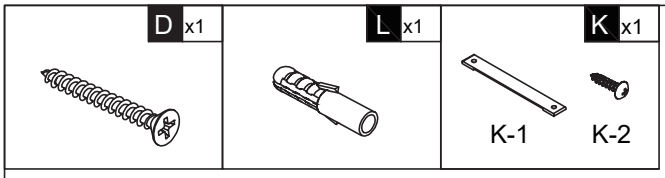

Done

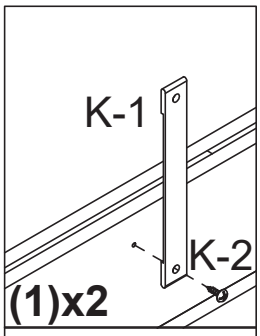

First fix the anti-rewind screw in the reserved hole of the product.

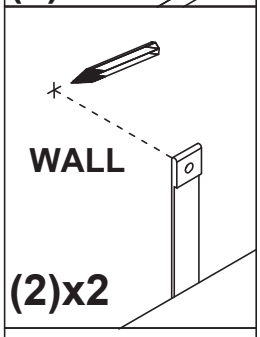

then, use a ruler to measure the approximate height of the product on the wall, and then mark it witha pen.

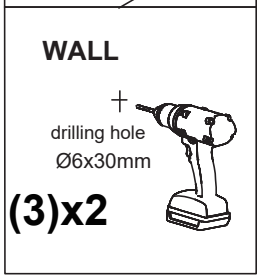

Then use a tape drill to make holes in the wall that are suitable for the product screws.

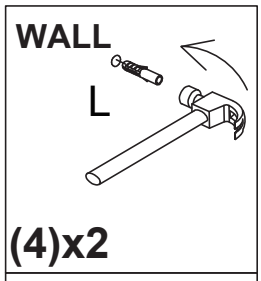

Then,put the expansion bolt into the hole

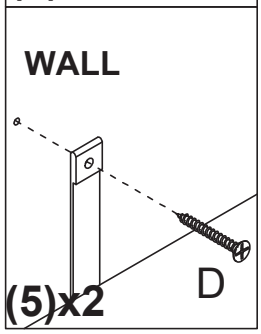

Finally,pass the matching screws throughthe "anti-rewind" and tighten themto fix them on the wall.

