User Manual

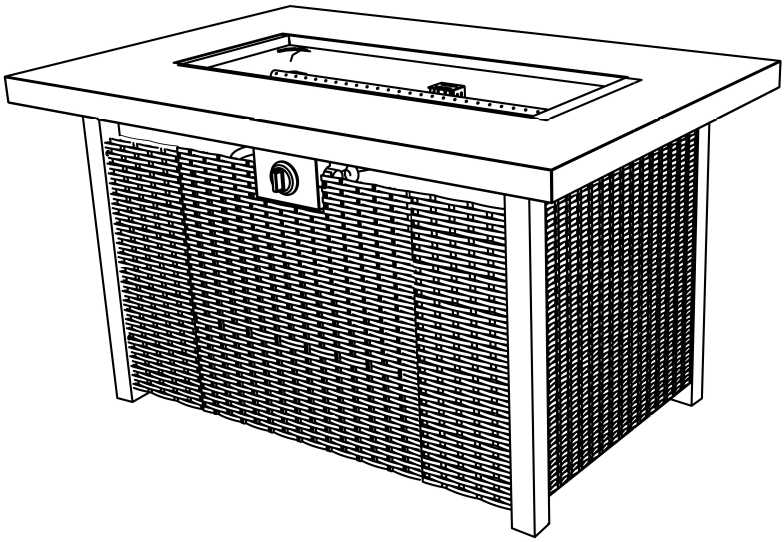

Fire Table

⚠ DANGER

CARBON MONOXIDE HAZARD

- This appliance can produce carbon monoxide which has no odor.
- Using it in an enclosed space can kill you.
- Never use this appliance in an enclosed space such as a camper, tent, car or home.

FIRE OR EXPLOSION HAZARD

If you smell gas:

- Shut off gas to the appliance.
- Extinguish any open flame.
- If odor continues, leave the area immediately.
- After leaving the area, call your gas supplier or fire department.
- Failure to follow these instructions could result in fire or explosion, which could cause property damage, personal injury, or death.

⚠ WARNING

Do not store or use gasoline or other flammable vapors and liquids in the vicinity of this or any other appliance. An LP- cylinder not connected for use shall not be stored in the vicinity of this or any other appliance.

⚠ WARNING

For outdoor use only. Installation and service must be performed by a qualified installer, service agency, or the gas supplier.

⚠ WARNING

If the information in this manual is not followed exactly, a fire or explosion may result causing property damage, personal injury, or loss of life.

Improper installation, adjustment, alteration, service or maintenance can cause injury or property damage. Refer to the owner's information manual provided with this appliance. For assistance or additional information consult a qualified installer, services agency or the gas supplier.

Parts List

①LID
②TABLE
③DOOR
④FRONT PANEL
⑤SIDE PANEL
⑥BACK PANEL
⑦LEG (ABCD)
⑧BRACKET
⑨STONE

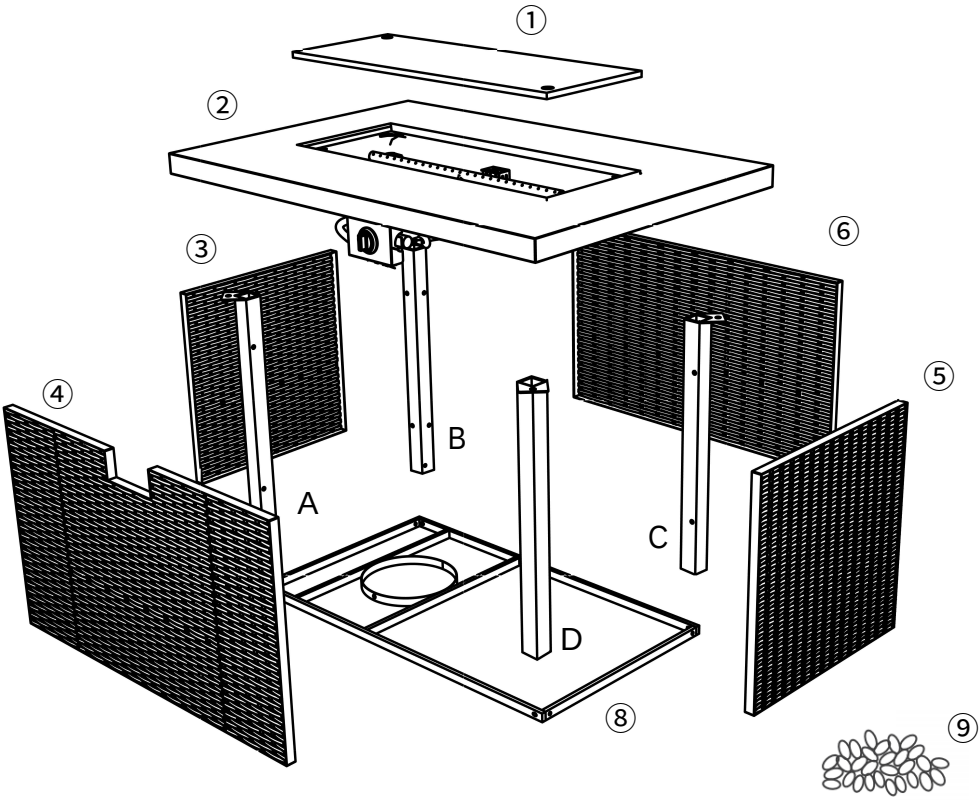



Screw(M6*10)*24 a | Screw(M6*20)*5 b | Screw (M4X8)*1 c | Asher*1 d | Door Knob*1 e | Wrench*1 f

Safety Instructions

General Information

Before you assemble or operate this unit, please carefully read this entire manual.
Failure to do so may result in a fire, explosion, injury or death.

⚠ WARNING

- The installation of this unit must adhere to local codes or Propane Storage and Handling Code, CSA B149.2
- THIS UNIT IS INTENDED FOR OUTDOOR USE ONLY! This product shall be used outdoors, in a ventilated space and shall not be used in any enclosed area.
- This unit is to be used with propane gas only!(sold separately)
- Do not attach a remote gas supply to this unit.
- Only use propane gas for this unit.
- This unit is not intended for natural gas.
- Converting this unit to natural gas is dangerous and not recommended. The conversion of this unit will void the manufacturer warranty.
- Do not use any solid fuel or charcoal for this unit.
- When igniting this unit, stay away from the burner as the flame will light up and may cause injury.
- **LP GAS WARNING:** Do not use any more than 1/4 in depth lava rocks / pumice stones / LavaGlass™ above the burner holes. Doing so will suffocate the flame.
- **If the propane gas tank is leaking gas, you may hear, see, orsmell a hiss. Do the following:**
  1. Disconnect the propane gas tank.
  2. Do not attempt to fix the problem yourself.
  3. Contact your gas supplier or fire department for help.
- Applying too much propane may result in gas pooling and will not burn. Allow fresh air into the unit so that the remaining gas may escape.
- Do not use a flame to check for gas leaks.
- Manifold pressure: 11 inch w.c. (2.74kPa).
- Use LP propane tanks with the following dimensions: diameter 12 in, height 18 in.
- You must use a propane tank that has a collar to protect the gas valve.
- DO NOT fill tank over 80 percent full.
- The tank system must be set up for vapor withdrawal.
- Discontinue use if any part of the propane tank is damaged. Rust and dents may be hazardous and should be inspected by a gas supplier.
- Do not burn anything other than the provided materials for this fire table.
- Keep away from the unit for the first 20 minutes after igniting your unit for the first time, as lava rocks / pumice stones / LavaGlass™ could pop out and cause injury. Should any rocks pop out, discard them.
- Always ensure that lava rocks/pumice stones/LavaGlass™ are completely dry before use. Failure to do so will cause them to crack or pop.
- Do not operate unit until all parts are fully assembled.
- Do not paint or color any part of this heating unit.
- Unit may be hot while in use, do not attempt to move it while in use.
- Never leave this heating unit unattended while in use.
- This unit is not intended for cooking.

- This unit is not intended for cooking.
- Keep any flammable items away and do not use any other fireplace cover for this unit.
- Keep a safe distance to avoid burning skin or clothing.
- Do not sit or rest hands or feet on this heating unit.
- Never place hands or fingers on upper portion of this unit while in use.
- Keep all electrical cords and fuel supply hose away from heated surfaces.
- Combustible material should not be within 60 inches of the top of the unit, or within 48 inches around the entire unit.
- Keep the appliance area clear and free from combustible material, gasoline and other flammable vapors and liquids.
- If the flame goes out while burning, turn the gas valve off. Wait 5 minutes before repeating the initial lighting procedure. Once you have a flame started, hold down the control knob for 1 minute.
- Do not add water into the unit.
- Do not operate unit if any part has been under water. Call a service technician to replace any damaged parts should this occur.
- Do not disconnect any part while unit is in use.
- Do not store a spare propane tank on or near this unit.
- If the heating unit isindoors, detach the propane tank and leave outdoors.
- Do not operate on a boat or vehicle. This unit must be used on a flat surface and outdoors only.
- Alwaysremove protective cover before operating (if applicable).
  Do not set the protective cover over the unit until it is turned off and completely cooled down.
- Check for leaks after not using the unit for long periods of time.
- Children should never operate this unit. Children must be supervised while near this unit.
- Keep gas tank at least 5 feet away from unit when lit. (if external tank)
- Maximum gas supply: 250 psi; Min. gas supply: 10 psi.
- All installation and repair should be done by a qualified professional. This unit should be inspected annually and cleaned regularly.
- Inspect all elements of this heating unit before each use. If there is damage, the burner must be replaced.
- Keep the hose out from any pathwaysto eliminate any accidental damage. (if external tank)
- Be aware of the hazards of high temperatures and stay away from the unit to avoid any burns or injury.
- The gas supply tank should be constructed and marked with the specifications for the LP gas tanks of the U.S. Department of Transportation or the National Standard of Canada CAN/C-SA-B339, LP gas tanks, spheres and tubes for Transportation of Dangerous Goods; and Commission.
- The LP gas tank must have a listed overfilling prevention device and a QCCI or Type I, (CGA791) LP gas tank connection.
- This heating appliance should not be used on plastic or artificial wood decks.
- Children and adults should be alerted to the hazards of high surface temperatures and should stay away to avoid burns or clothing ignition.
- Young children should be carefully supervised when they are in the area of the appliance.
- Clothing or other flammable materials should not be hung from the appliance or placed on or near the appliance.
- Any guard or other protective device removed for servicing the appliance shall be replaced prior to operating the appliance.

- Installation and repair should be done by a qualified service person. The appliance should be inspected before use and at least annually by a qualified service person. More frequent cleaning may be required as necessary. It is imperative that the control compartment, burners and circulating airways of the appliance are kept clean.
- Allow heating item to cool completely before placing on lid.
- DO NOT use heating item while lid is installed. Always remove the lid while heating item is in use.

Only use the regulator and hose assembly provided with this unit. Replacement parts must be supplied directly by factory.

Inspect the burner before use of this unit. If the burner shows any kind of damage, do not operate the appliance. For assistance with repair or replacement of the burner or any other parts, Please contact us in anytime.

NOTE: You must follow all steps to properly assemble this heating item. Make sure the gas valve is turned "OFF" before assembling. DO NOT attempt to assemble without proper tools.

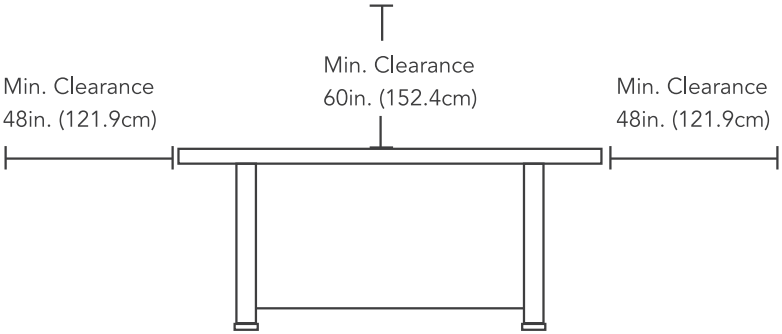

Combustible materials should not be within 60 inches of the top of the unit, or within 48 inches around the entire unit.

Assembly Instructions

Checking the gas control

Check that the control knob (15) for the gas supply system is turned to the "OFF" position before starting any assembly.

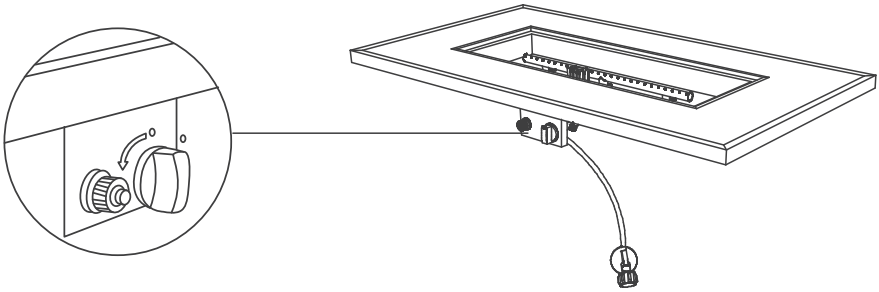

Attaching the legs

The letters with hole marked on back of table indicate that they correspond to the letters on the table legs.

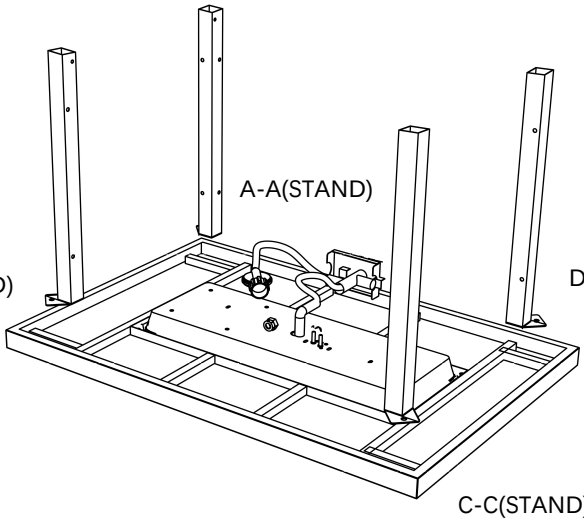



use a(M6*12)

MARK

The screws can be unlock first to facilitate the panel hole

Attaching the side and front panels

Attach the side panels (5), front panel (4) and later panel (6) to the legs using 12 pcs screws (b).

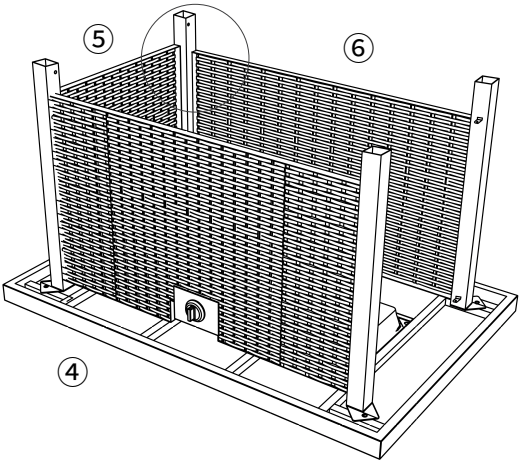

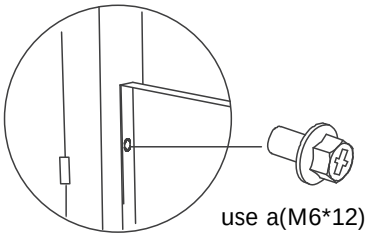

use a(M6*12)

Attaching the bracket and feet

Install the metal bracket(8)and 4 adjustable feet

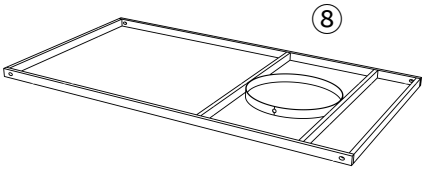

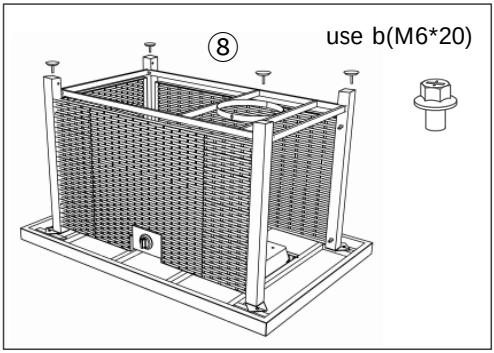

Attaching the door

Install the door panel(3)

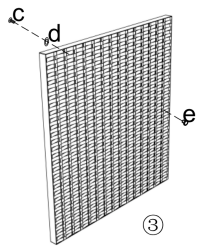

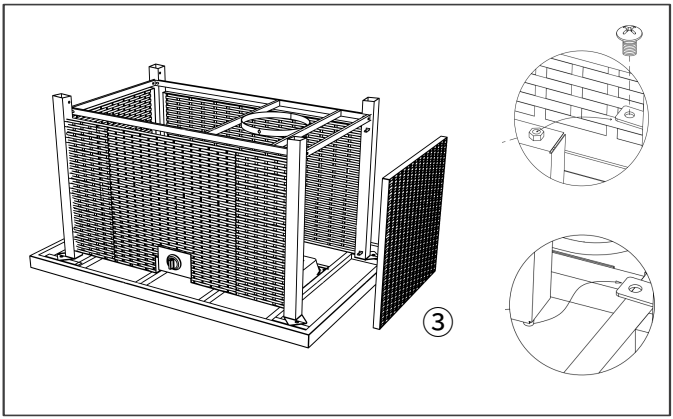

Securing the propane tank

Place propane gas tank (not included) into the metal stand (8). Make sure the gas tank sits on the metal stand (8) completely. Turn the preassembled wing screw on the outer part of metal stand (8) clockwise to secure the propane gas tank tightly.

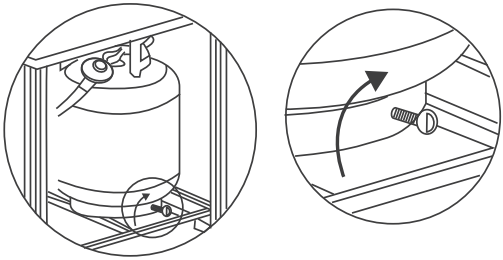

Attaching the regulator

Turn the cylinder valve on the tank clockwise to close the propane tank.
Attach the preassembled regulator from the table top (2) to the cylinder valve by turning the regulator coupling nut clockwise. Make sure it is fastened securely and tighten connections by hand only. After connecting, secure gas hose to the bracket on the inside of the front panel(4).

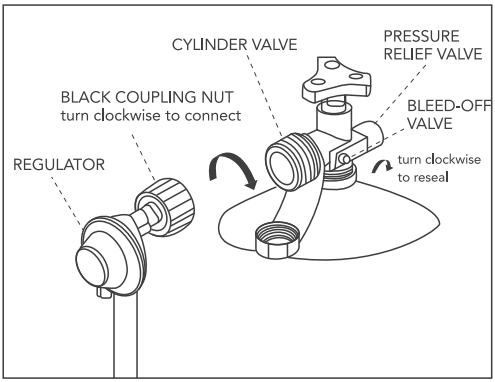

Pouring the lava rocks

Pour the box of lava rocks ⑨ into the firebowl (17).

⚠ CAUTION

To ensure proper function, the guard (16) on this burner (18) should be free of lava rocks at all times.

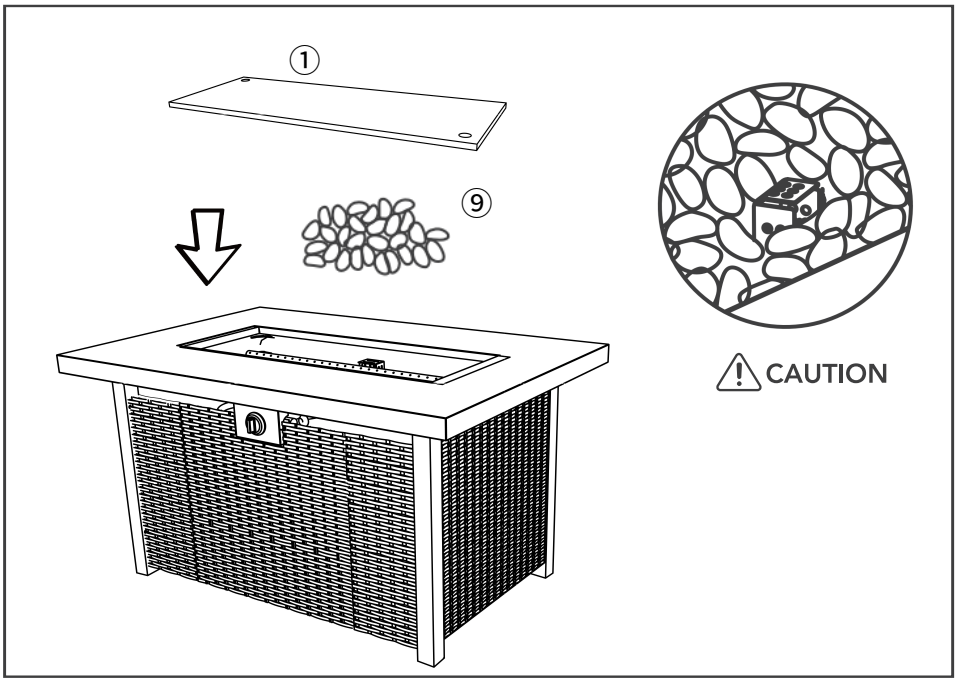

OPERATION

⚠ WARNING

Never use this appliance for other than the intended use. Do not use this appliance to prepare food.

Initial Lighting: When lit for the first time, the appliance emits a slight odor. This is normal temporary condition caused by the "burn-in"of internal paints and lubricants used in the manufacturing process and does not occur again. Simply run the main burner on high for approximately one-half hour.

⚠ WARNING

- Children and adults should be alerted to the hazards of high surface temperatures and should stay away from the appliance to avoid burns or clothing ignition.
- Children should be carefully supervised when they are in the area of the appliance.
- Clothing or other flammable materials should not be hung from the appliance, or placed on or near the appliance. The area above the enclosure may be extremely hot. Direct contact with these surfaces should be avoided in order to prevent burns or clothing ignition.
- Any guard or protective device removed for servicing the appliance must be replaced prior to operating the appliance.
- Installation and repair should be done by a qualified service person.
- The appliance should be inspected before each use and at least annually by a qualified service person. More frequent cleaning may be required necessary. It is imperative that the control compartment, burners and circulating air passageways of the appliance be kept clean.
- Never use the appliance while it is raining. Always turn the appliance off when raining.
- Never use the appliance if the burner is damaged. Inspect the burner before each use.
- Ensure that no debris such as leaves; grass or other objects have entered or are on the appliance. If the burner is damaged it must be replaced prior to using the appliance with a replacement burner specified by your manufacture.
- Inspect the hose assembly before each use. If there is evidence of excessive abrasion or wear, or if the hose is damaged it must be replaced prior to using the appliance with a replacement hose assembly specified by your manufacture.

⚠ WARNING

Any modification to the appliance may compromise the safety of this appliance. Special concern is as followed:

Do not bypass thermocouple safety.

Do not operate the appliance if any parts has been under water. Immediately call a qualified service technician to inspect the appliance and replace any part of the control system and gas control, that has been underwater.

Lighting Instructions

1. Press and hold electronic igniter button.
2. Turn the burner control to the high position, press and hold in. When the burner lights, release the electronic igniter button.

> ⚠ **WARNING**
>
> **FOR YOUR SAFETY:**
> Keep face and body away from burner area when lighting.
> Ensure burner controls are in the off position.Slowly turn on the gas supply valve.

3. Continue to depress the burner control knob for 30 seconds and then release. If the flame goes out, repeat the procedure.
4. Adjust the flame to the desired height with the burner control knob.

> ⚠ **WARNING**
>
> **FOR YOUR SAFETY:**
> The propane cylinder is equipped with an excess flow device.
> Unless burners are turned off prior to turning the cylinder on, only small flames and low heat will be achievable.

5. If the burner will not light with the electronic igniter, hold a lit long match or lit long butane lighter tothe ignition area of the burner and continue with step 2.
6. To shut down the burner turn the burner control knob clockwise to the off position. Then turn the gas off at the source (propane cylinder valve or natural gas supply valve).

> ⚠ **WARNING**
>
> **FOR YOUR SAFETY:**
> If the burner does not light within 10 seconds, turn the valve off and wait 5 minutes for any gas to dissipate before repeating the procedure.

MAINTENANCE AND STORAGE

MAINTENANCE:

To enjoy years of outstanding performance from your appliance,make sure you perform the following maintenance activities on a regular basis:

- At least once a year, the unit should be inspected for the presence of spiders, spider webs or other insects.

- Air flow must be unobstructed. Keep controls, burner, and circulating air passageways clean. Signs of possible blockage include:
  1. Gas odor with extreme yellow tipping of flame.
  2. Appliance does NOT reach the desired temperature.
  3. Heat glow is excessively uneven.
  4. Heat makes popping noises.
- Spiders and insects can nest in burner or orifices. This dangerous condition can damage appliance and render it unsafe for use. Clean burner holes by using a heavy-duty pipe cleaner. Compressed air may help clear away smaller particles.
- Carbon deposits may create a fire hazard. Clean reflector, thermocouple and emitter screen with a dry cloth if any carbon deposits develop.
- The burner is made from stainless steel, but extreme heat and a corrosive environment can cause surface corrosion to occur. Inspect the burner at least annually for cracks, insect nests, excessive corrosion or any other damage. If the burner is damaged, it must be replaced with a burner specified by the manufacturer before the appliance is put into operation.

STORAGE:

Between uses

- Turn the control knob to "OFF"position.
- Disconnect LP source.
- Store appliance upright in an area sheltered from direct contact with inclement weather (such as rain, sleet, hail, snow, dust and debris).
- Cover appliance to protect exterior surfaces and to help prevent build up in air passages. **NOTE: Wait until appliance is cool before covering.**

During periods of extended inactivity or when transporting

- Turn the control knob to "OFF"position.
- Disconnect LP source and move to a secure, well ventilated locationoutdoors. DO NOT store in a location that will exceed 125 degrees F.
- Store appliance upright in an area sheltered from direct contact with inclement weather (such as rain, sleet, hail, snow, dust and debris).
- Cover appliance to protect exterior surfaces and to help prevent build up in air passages. **NOTE: Wait until appliance is cool before covering.**

TROUBLE SHOOTING

PROBLEM	PROBABLE CAUSE	SOLUTION
Low heat/Low flame when valve turned to high.	For propane-improper lighting procedure.	Ensure lighting procedure is followed carefully.The valve must be in the off position when the tank valve is turmed on.Tum tank on slowly to allow pressure to equalize.See lighting instruction. Pipe must be sized according to installation code.
Burners burm with yellow flame, accompanied by the smell of gas.	Possible spider web or other debris.	Thoroughly clean burmer venturi.See general maintenance instructions.
Burner will not light withthe igniter, but will light with a match.	Dead battery/or installed incorrectly. Loose electrode wire or svwitch terminal wires.	Replace with heavy duty battery. Check that electrode wire is firmly pushed onto the terminal on the back of the igniter. Check that the lead wires from the module to the ignition switch(if equipped) are firmly pushed onto their respective terminals.
Burner will not stay lit when control knob is released.	Knob not being held in long enough. Too windy. Flame glass or debris in ignition area of the burner preventing thermocouple from being fully engulfed in flame. Dirty thermocouple or thermocouple connection. Faulty thermocouple or valve.	Thermocouple mush have time to heat up-hold the knob in for 30 seconds after the burner lights, then release. Unit will shut dovwm if winds are greater than 10mph (16km/h). Either locate to different area or use when it is less windy. Ensure there is no flame glass or other debris in ignition area, and that the small hole below the thermocouple is unobstructed. Clean the thermocouple and clean the connection between the valve and thermocouple. Ensure the connection is properly tightened. Replace thermocouple and /or valve.

PROBLEM	PROBABLE CAUSE	SOLUTION
Humming regulator.	Normal oocurrence on hot days.	This is not a defect.It is caused by internal vibrations in the regulator and does not affect the performance or safety of the appliance. Humming regulators will not be replaced.
Burner output on "high" setting is too low. (Rumbling noise and fluttering blue flame at burner surface.)	Lack of gas. Supply hose is pinched. Dirty or clogged ornifice. Spider webs or other matter in venturi tube. Propane regulator in "tow ftow' state.	Check gas level in propane cylinder.Reposition supply hose as necessary. Clean burner orifice. Clean out venturi tube. Ensure lighting procedure is followed carefully.Al valves must be in the off position vwhen the tank vaive is tumed on.Tum tank on slowly to allow pressure to equalize.See lighting instruc-tions.

If there is any problem, please contact us through our Amazon store email address, where you could be replyed quickly. You could also tell amazon customer service you want to contact the seller, we will solve the problem for you.



MADE IN CHINA