KINGSTON

TO ORDER PARTS, CALL: 1-877-252-7277
www.kingstonbrass.com

# KB6340,1,2,3,6,7,8RXE

## Single Handle Pressure Balanced Tub & Shower Faucet, Valve Trim Only

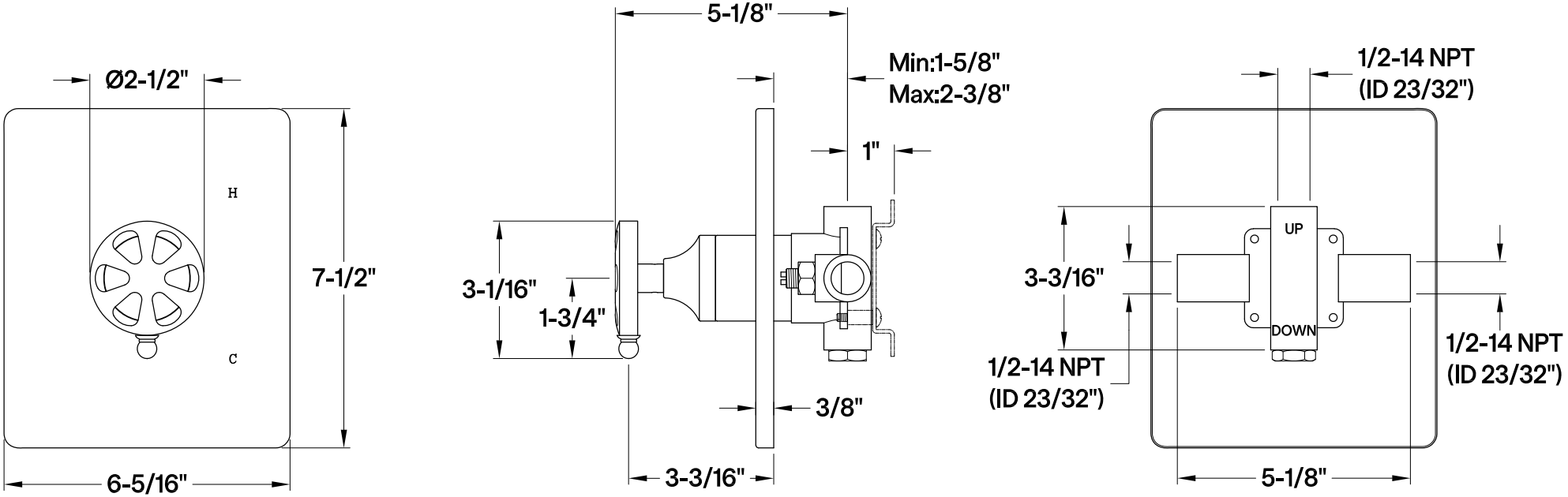


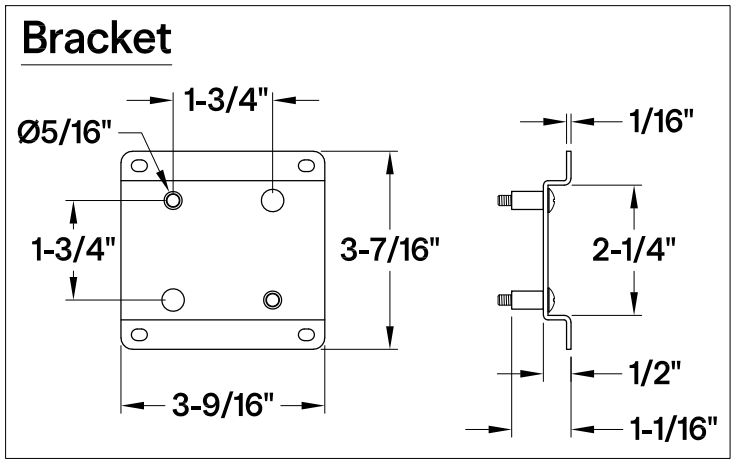


2025-12-A