ASSEMBLY & CARE ADVICE

FOR YOUR FURNITURE TO LAST, CORRECT ASSEMBLY AND PROPER MAINTENANCE ARE NECESSARY. PLEASE FOLLOW THE INFORMATION PROVIDED BELOW TO FULLY ENJOY YOUR FURNITURE.

BASIC ASSEMBLY TECHNIQUES

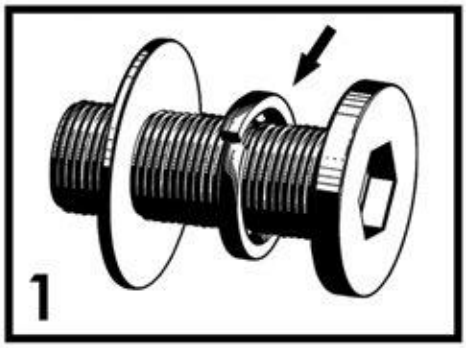

Before attaching each of the screws, make sure that the **smaller lock washer is between** the larger washer and the head of the screw.

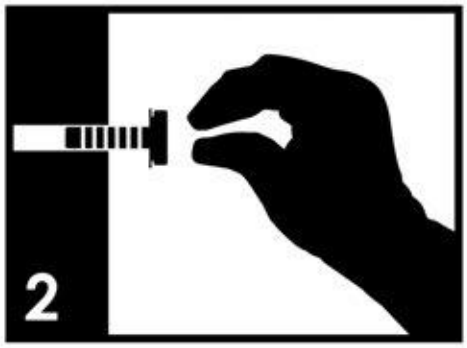

Position each part correctly and insert all screws into their respective holes. Then, **hand-tight and leave room for later adjustment. Do not use tool.**

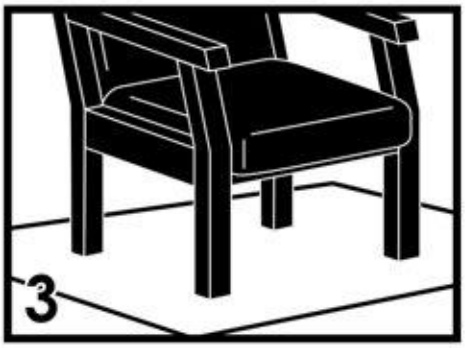

Make sure the furniture rests on a **flat and level surface** with each leg evenly touching the ground.

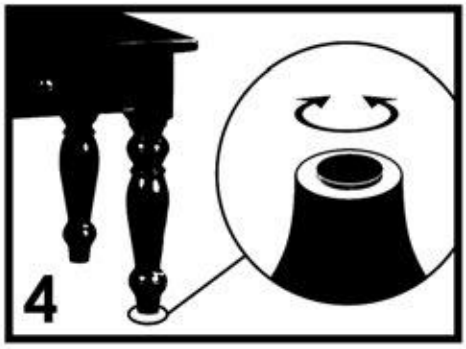

Some furniture come with **height adjustment knobs** underneath each leg. Turn counter-clockwise or clockwise to raise and lower each leg.

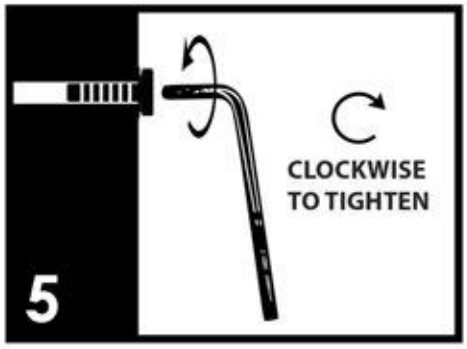

Finally, make sure all parts are properly aligned then use the included **hex key** to completely tighten the screws. Your furniture is now ready for use.

Store the hex key for later maintenance. Tighten the screws again **after two (2) weeks**, and then at least **once every six (6) months** after that.

IT IS THE USER'S RESPONSIBILITY TO MAINTAIN THE FURNITURE. THE SCREWS MAY LOOSEN OVER TIME AND CAUSE THE FURNITURE TO BE WOBBLY AND UNABLE TO SUPPORT ITS INTENDED WEIGHT CAPACITY. THIS CAN LEAD TO COLLAPSE AND CAN CAUSE SERIOUS INJURY.

FAILURE TO FOLLOW THE GUIDELINES ABOVE MAY RESULT TO INJURY AND/OR PROPERTY DAMAGE.

ALL RIGHTS RESERVED.

ASSEMBLY INSTRUCTION

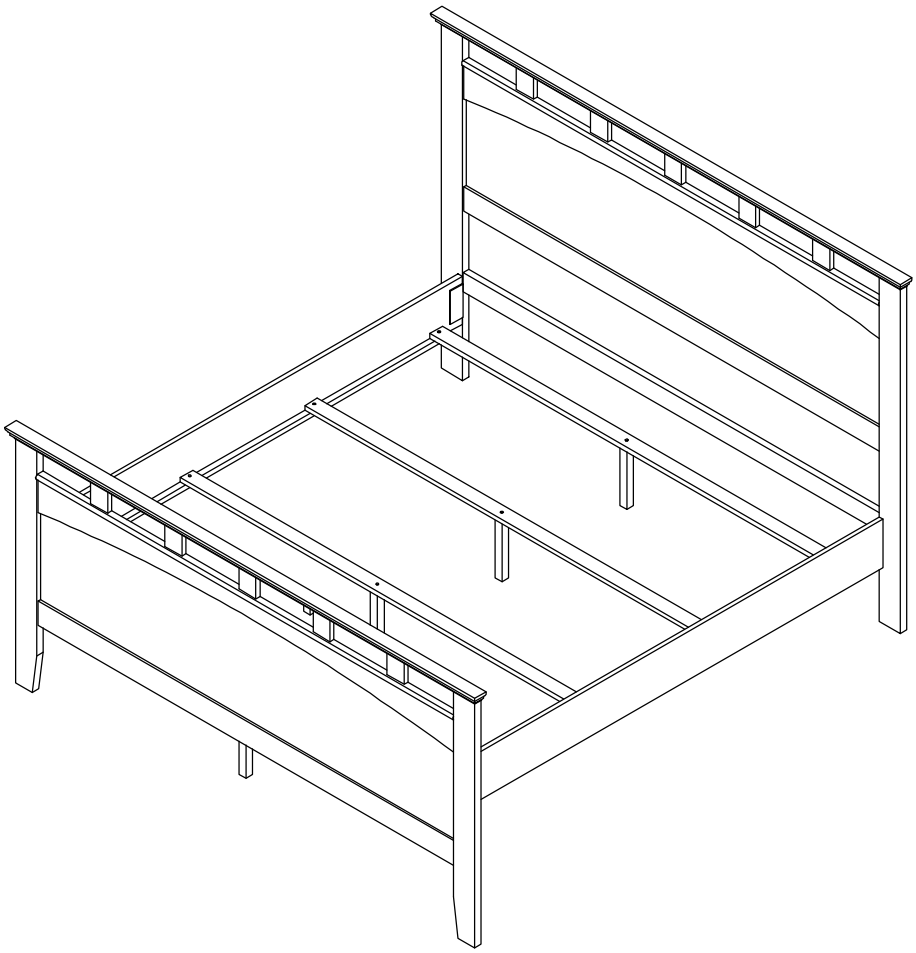

ASSEMBLY RATING

The assembly Rating a 5- point system that shows the degree of effort needed in assembling a specific product (with 1 being easy and 5 being relatively diffcult). For some product, two persons are recommended.

EASY 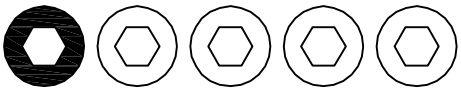 DIFFICULT

* 2 persons recommended

Do not tighten screws unitl completely assembled.

PARTS INDENTIFICATION			
No	SKETCH	PART NAME	Q' TY
A		HEADBOARD	1 PC
B		FOOTBOARD	1 PC
C		SIDE RAIL	2 PCS
D		SLATS	4 PCS
E		SLATS SUPPORT	4 PCS

HARDWARE LIST			
No	SHAPE	SPECIFICATION	Q' TY
1		WOOD SCREW 4 x 30 (mm)	8 PCS

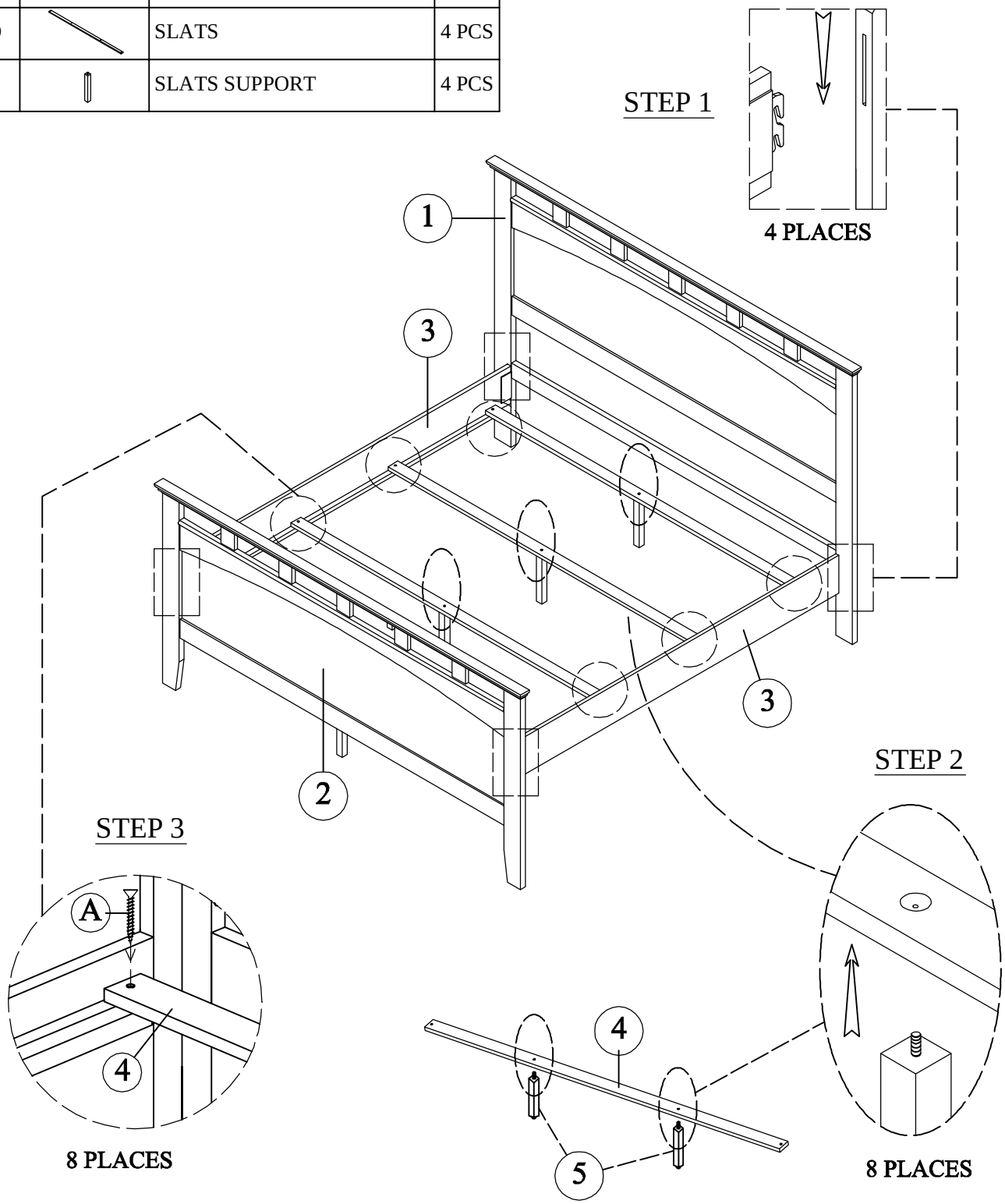

Do not tighten screws unitl completely assembled.