CCK8400,1,5,6,7,8DKL
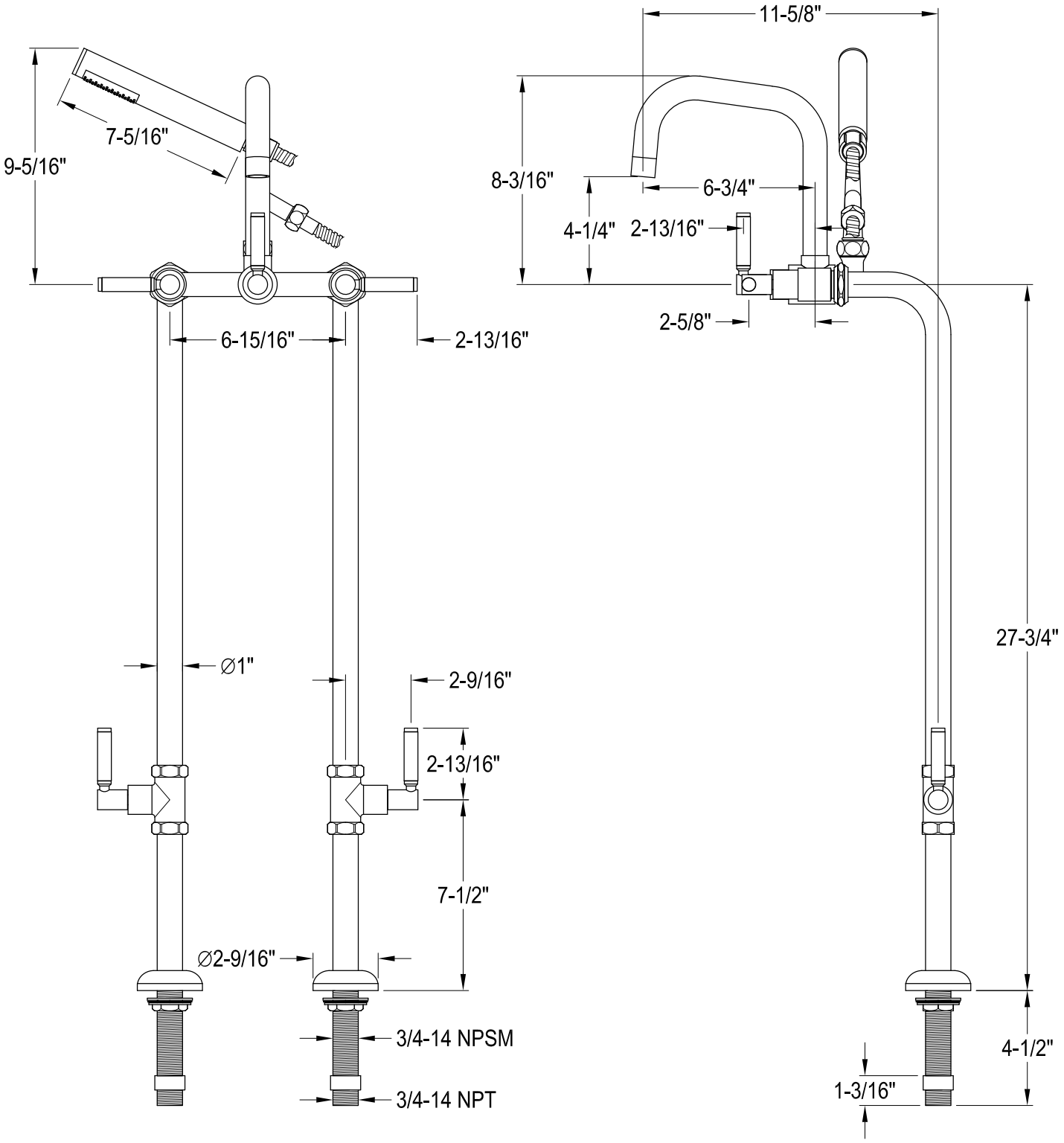
Freestanding Tub Filler With Supply Line and Shut Off Valve