Installation & Assembly

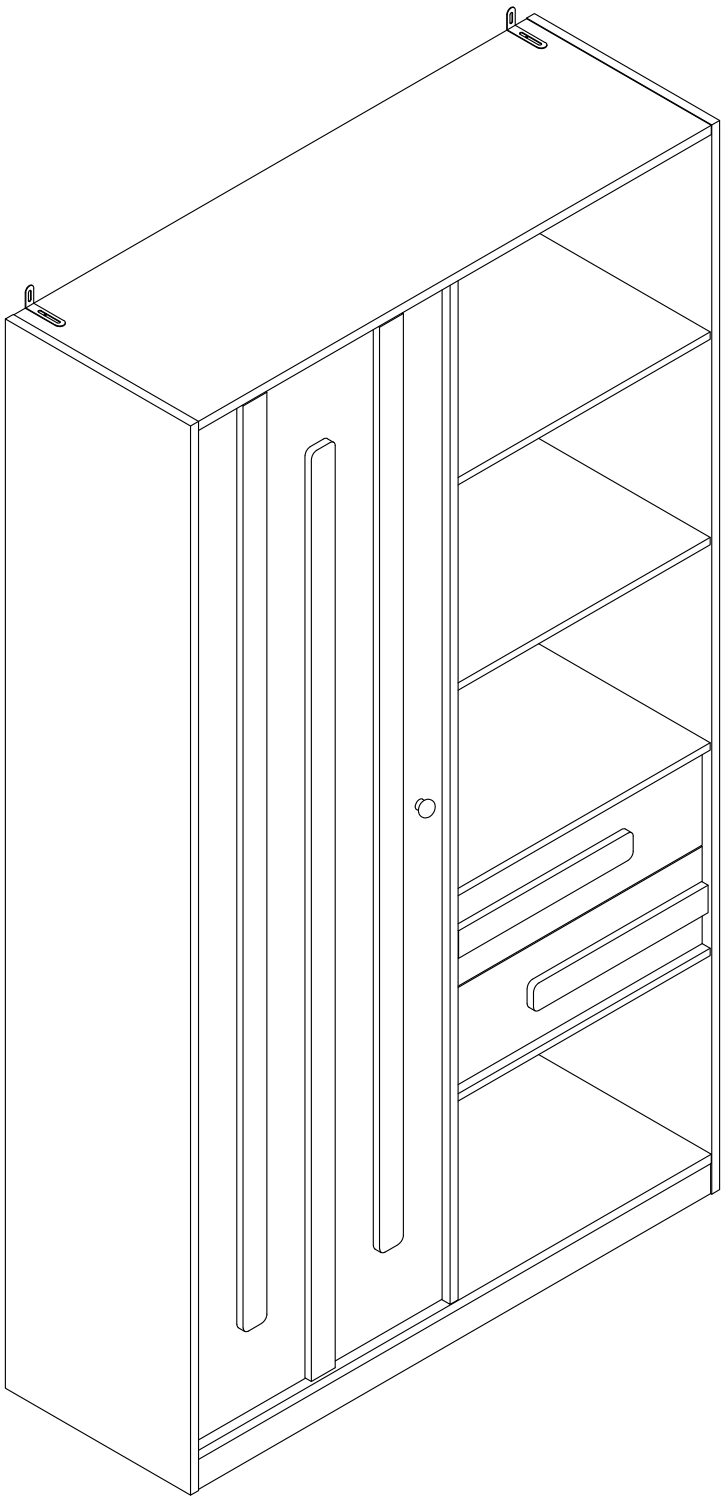

General Guidelines

- Please read the following instruction carefully and use the product accordingly.
- Please keep this manual and hand it over when you transfer the product.
- Please check that you have all the listed components and tools, before you start assembling the item.
- Assemble the item as close to its final position(in the same room) as possible.

Care and Maintenance

- The product is intended for indoor use only. The product must be assembled and used in accordance
- with the provisions of the manual.
- Avoid long-term exposure to humid environments to prevent mildew.
- Keep the product away from fire sources and high temperatures. Do not expose the product to direct sunlight.
- Do not place any hot objects on the surface of the product.

Warning ⚠

- Keep children and animals away from the work area, small parts could choke if swallowed.
- Children are not allowed to climb or stand on the product to avoid personal injury caused by the product tilting or tipping over.
- Please do not use the product if there is/are defective and/or missing part/s, as this can result in damage or injury.
- To avoid the potential dangers of suffocation, please keep all parts and packaging (film, plastic bags, foam, etc.) away from babies and children.

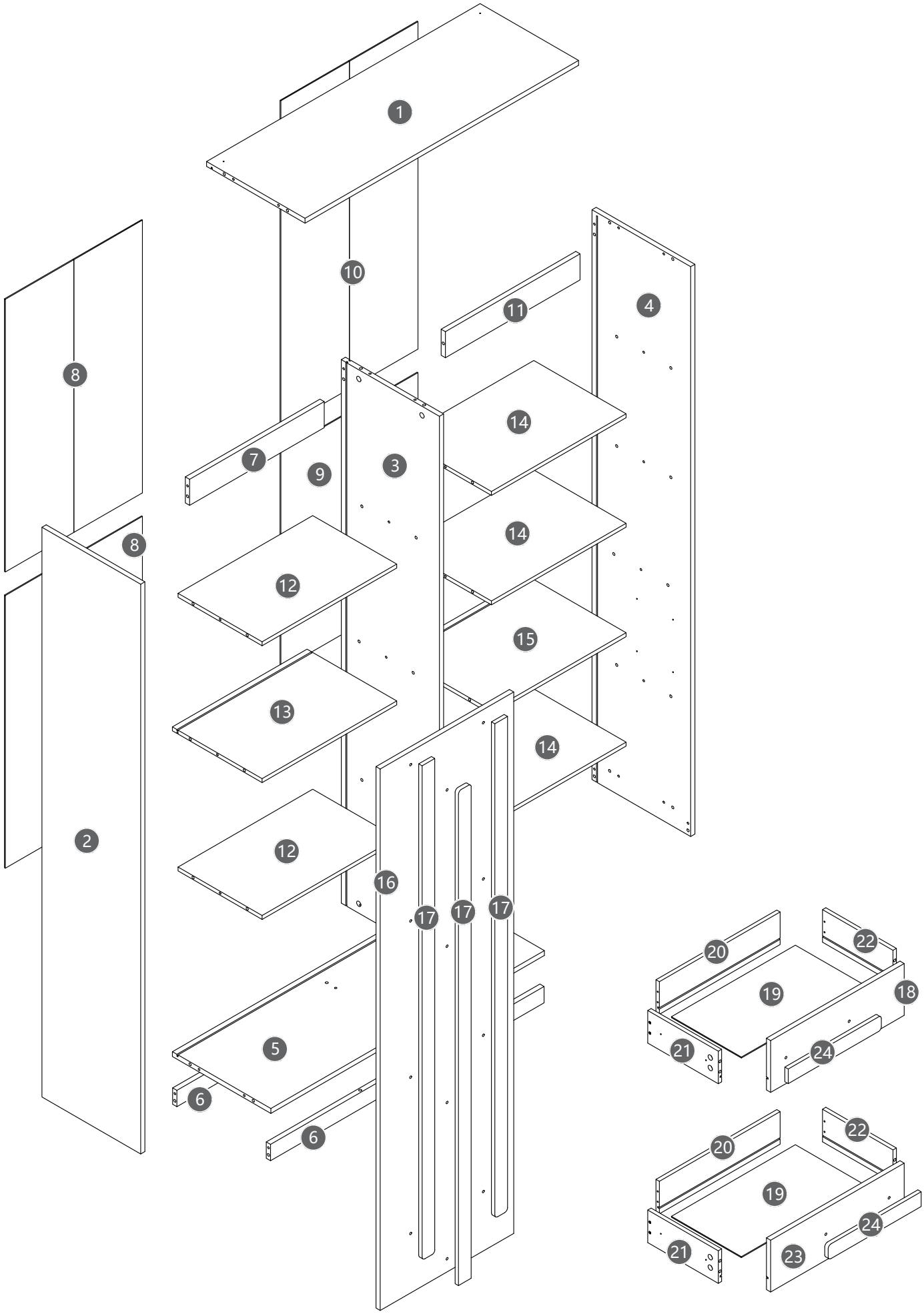
1
10
11
4
8
14
7
9
3
8
14
12
15
13
14
2
12
16
17
17
17
20
22
19
18
21
24
6
5
6
20
22
19
24
21
23

1 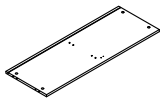 970*349(mm) 1PC	2 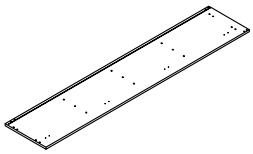 1750*350(mm) 1PC	3 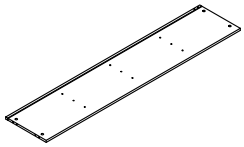 1669*348(mm) 1PC	4 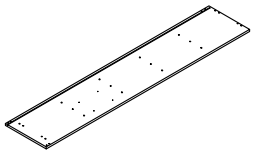 1750*350(mm) 1PC	5 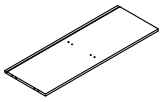 970*349(mm) 1PC
6 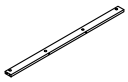 970*50(mm) 2PCS	7  477.5*80(mm) 1PC	8 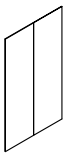 837.5*243(mm) 2PCS	9 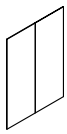 669.5*243(mm) 1PC	10 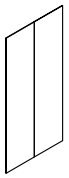 1005.5*243(mm) 1PC
11  477.5*80(mm) 1PC	12 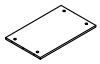 477.5*298(mm) 2PCS	13 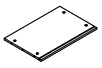 477.5*318(mm) 1PC	14 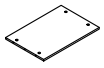 477.5*327(mm) 3PCS	15 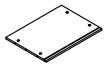 477.5*347(mm) 1PC
16 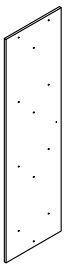 1663*473.5(mm) 1PC	17 1519*45(mm) 3PCS	18  473.5*159(mm) 1PC	19  437.5*246(mm) 2PCS	20  428.5*100(mm) 2PCS
21  250*100(mm) 2PCS	22  250*100(mm) 2PCS	23  473.5*159(mm) 1PC	24  330*45(mm) 2PCS	

A 60x 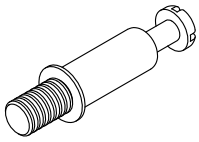 M6x35mm	B 60x 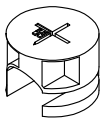 15*10	C 33x 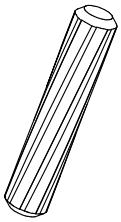 M6x30mm	D 16x 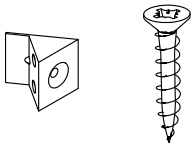 M3x12mm
E 24x 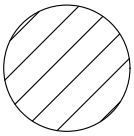	F 1x 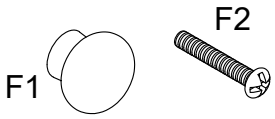 F1 F2 M4x19mm	G 4x 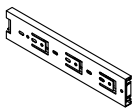 250mm	H 8x 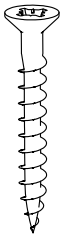 M3.5x30mm
I 34x 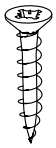 M3.5x14mm	J 8x 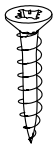 M3.5x12mm	K 4x 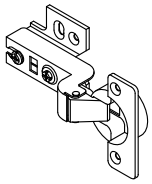	L 16x 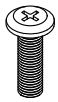 M6x20mm
M 2x 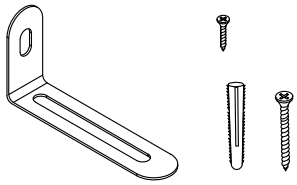	N 1x 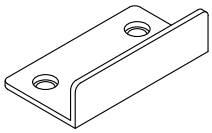		

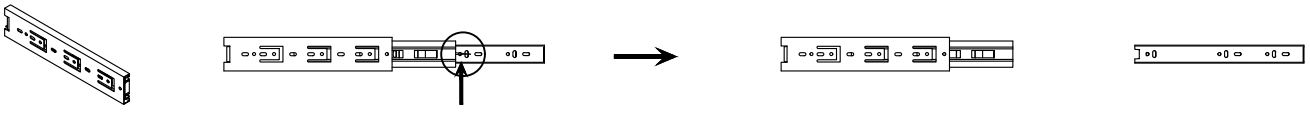

G*4 G1*4 G2*4

Hardware installation demonstration

NOTE:Please make sure "A"hardware tightened and can't be pulled out!

I

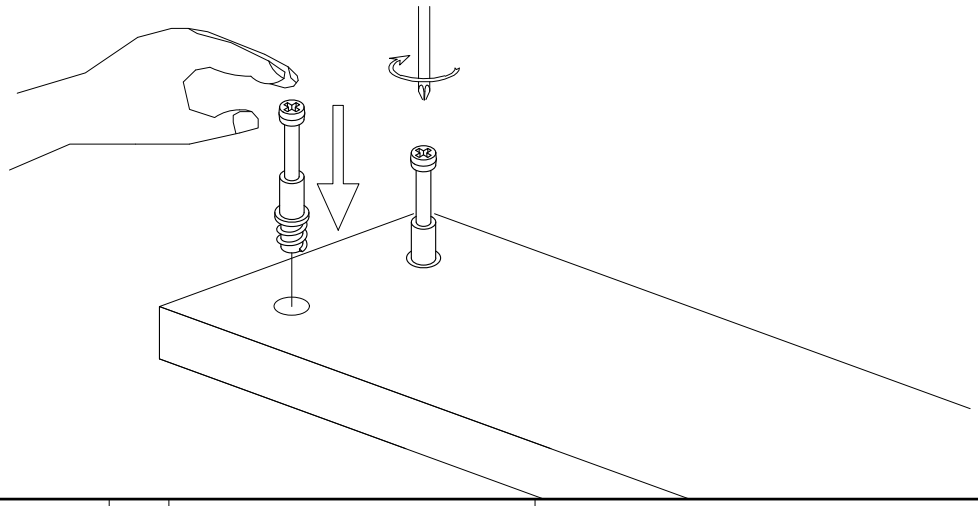

II

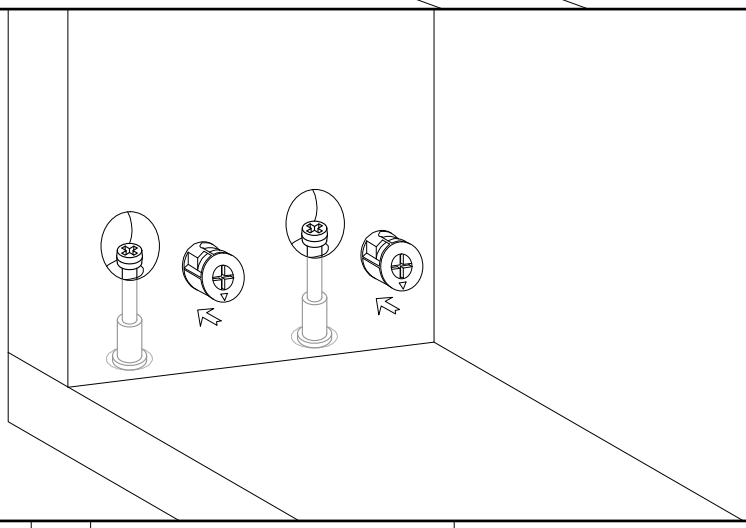

III

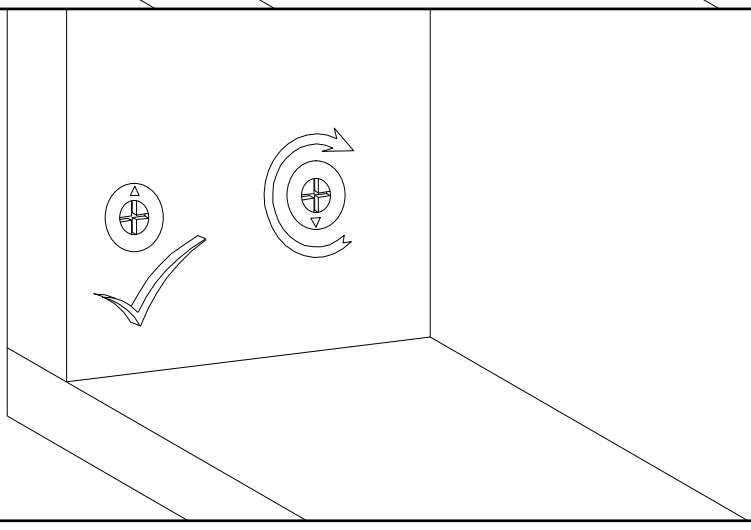

01

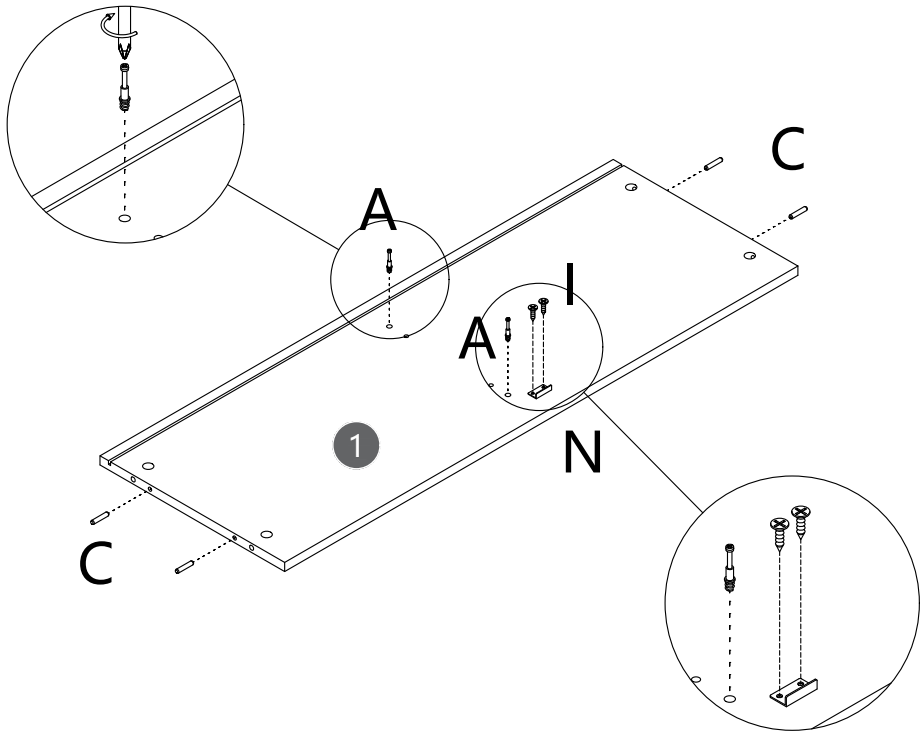

A 2x

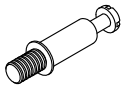

C 4x

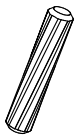

I 2x



N 1x

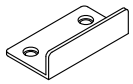

02

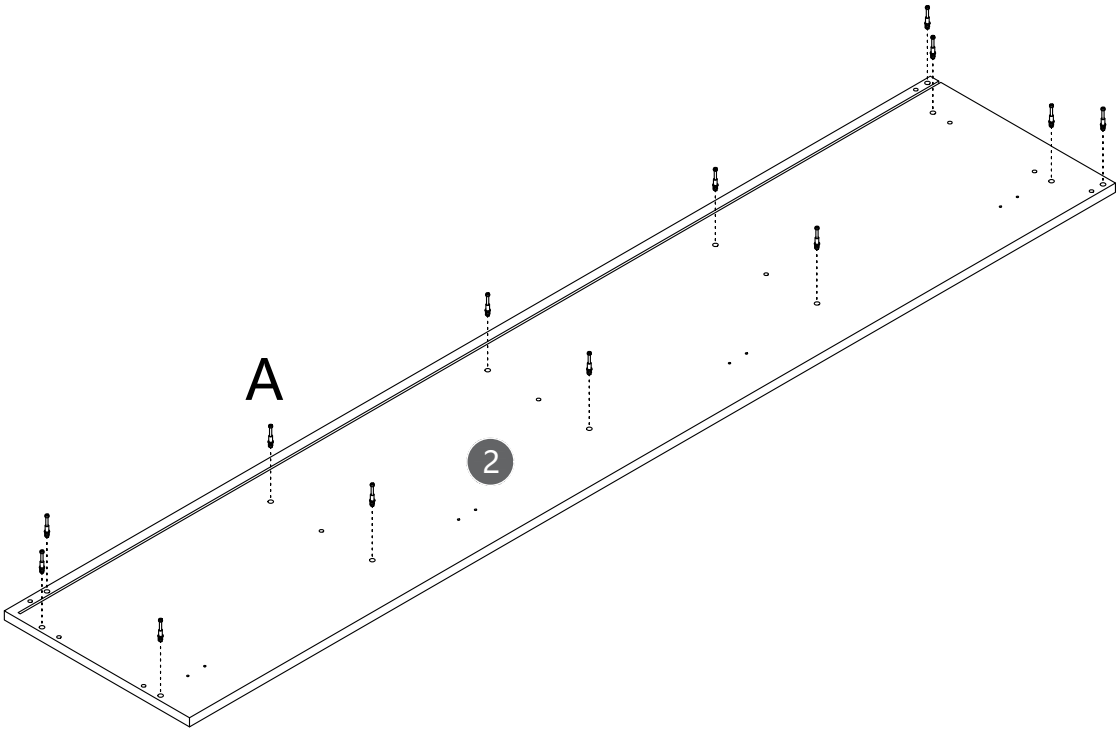

A 13x

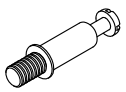

03

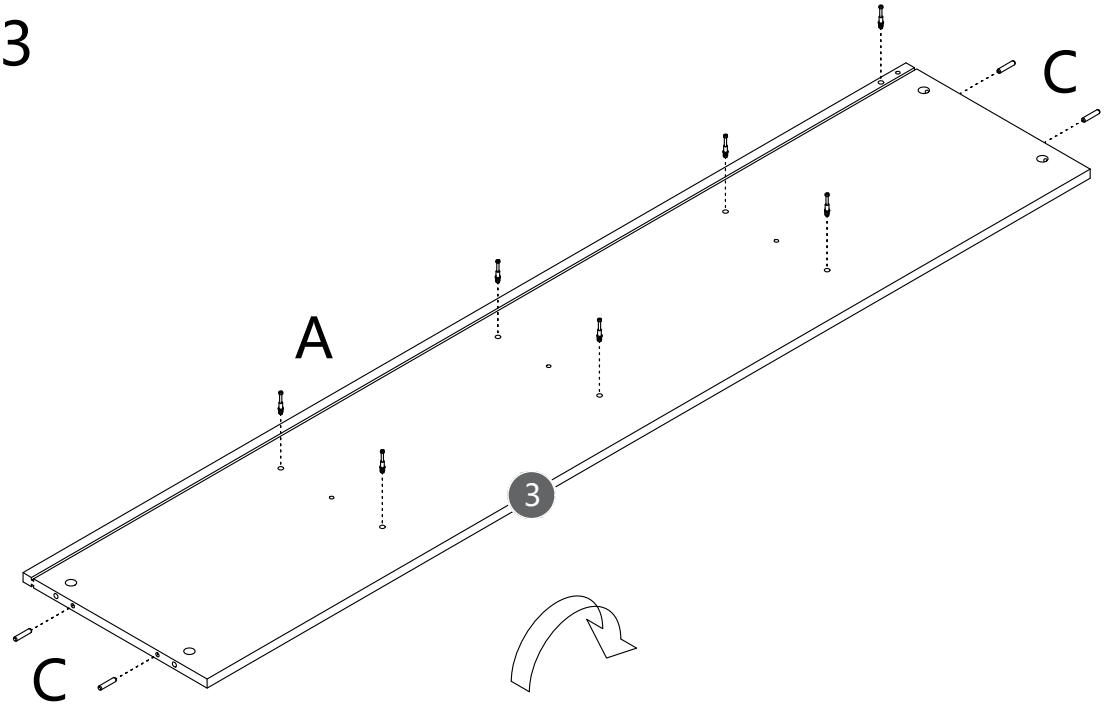

A 7x

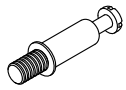

C 4x



04

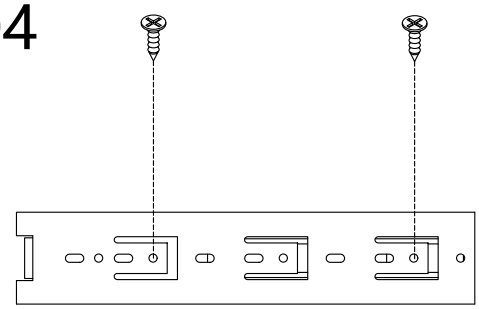

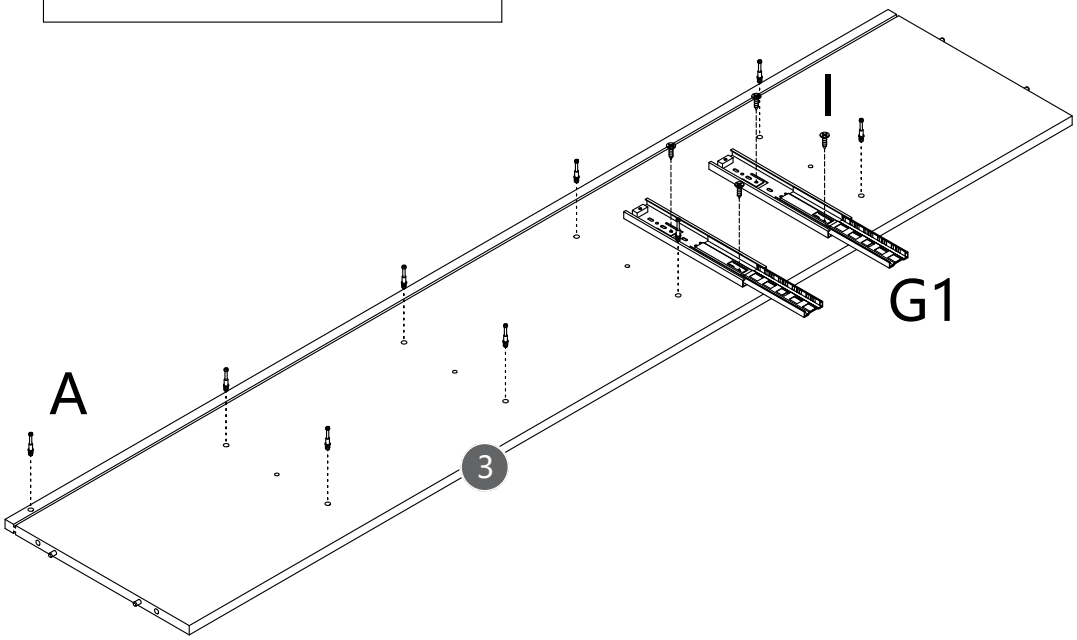

A 9x

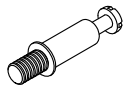

I 4x



G1 2x

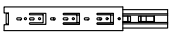

05

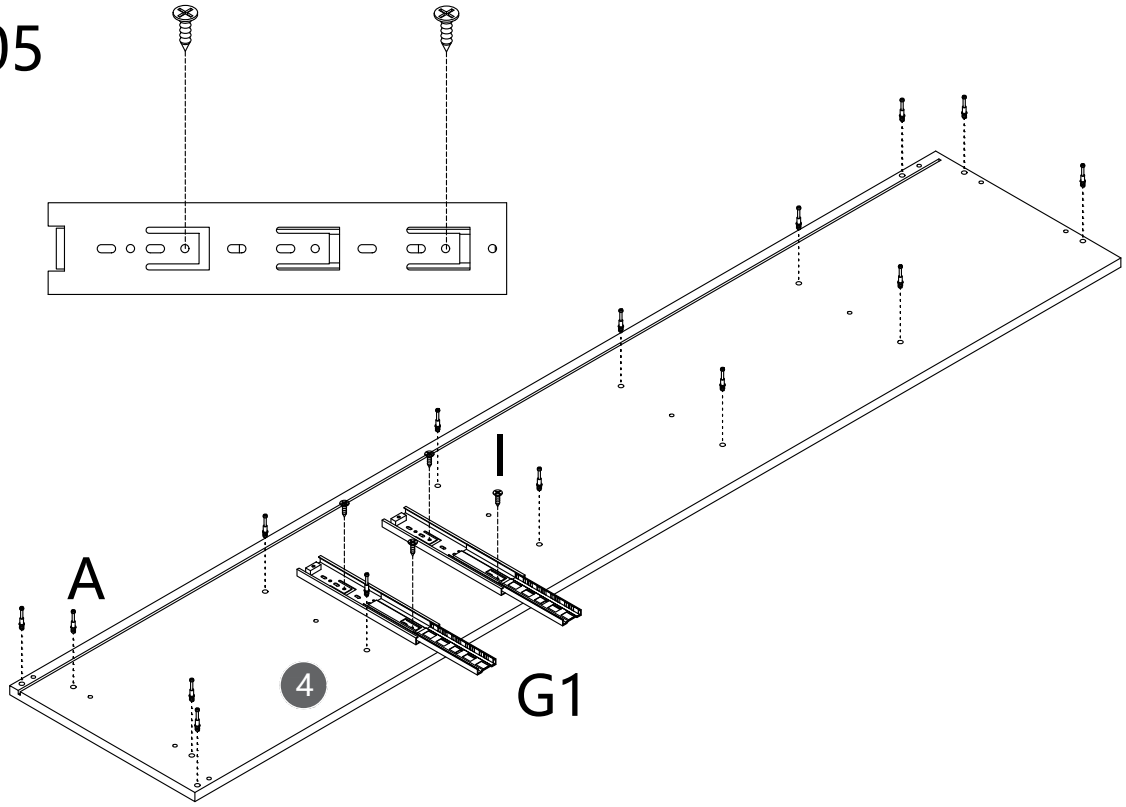

A 15x

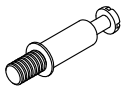

I 4x



G1 2x

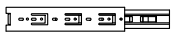

06

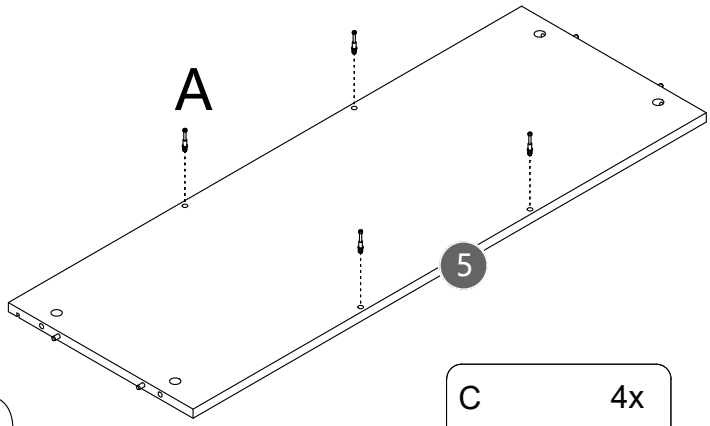

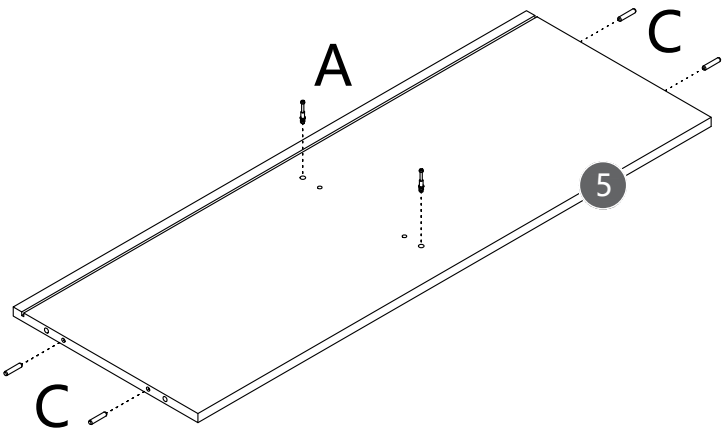

C 4x



A 6x

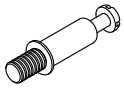

07

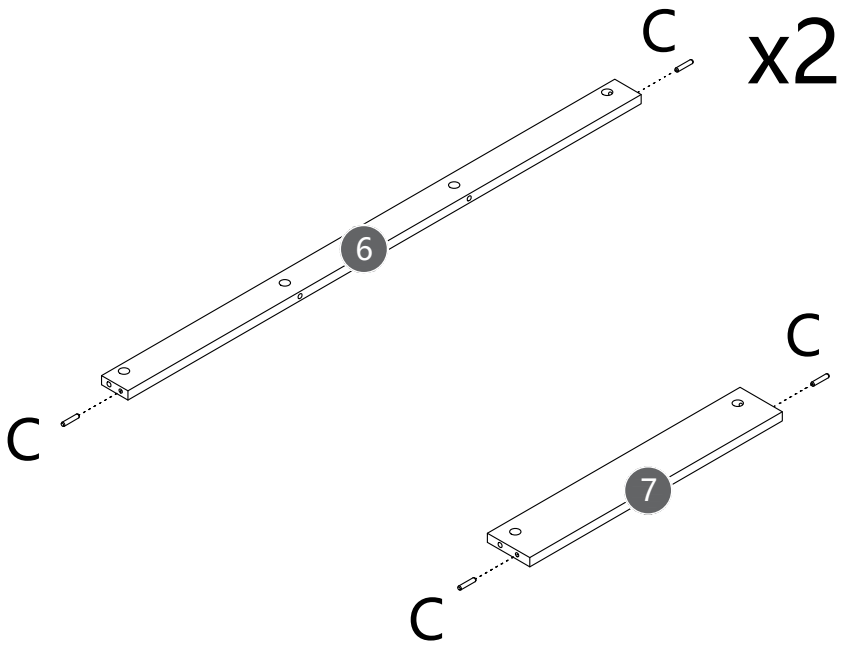

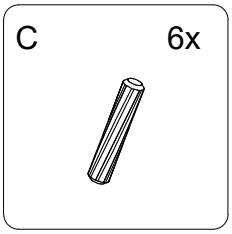

08

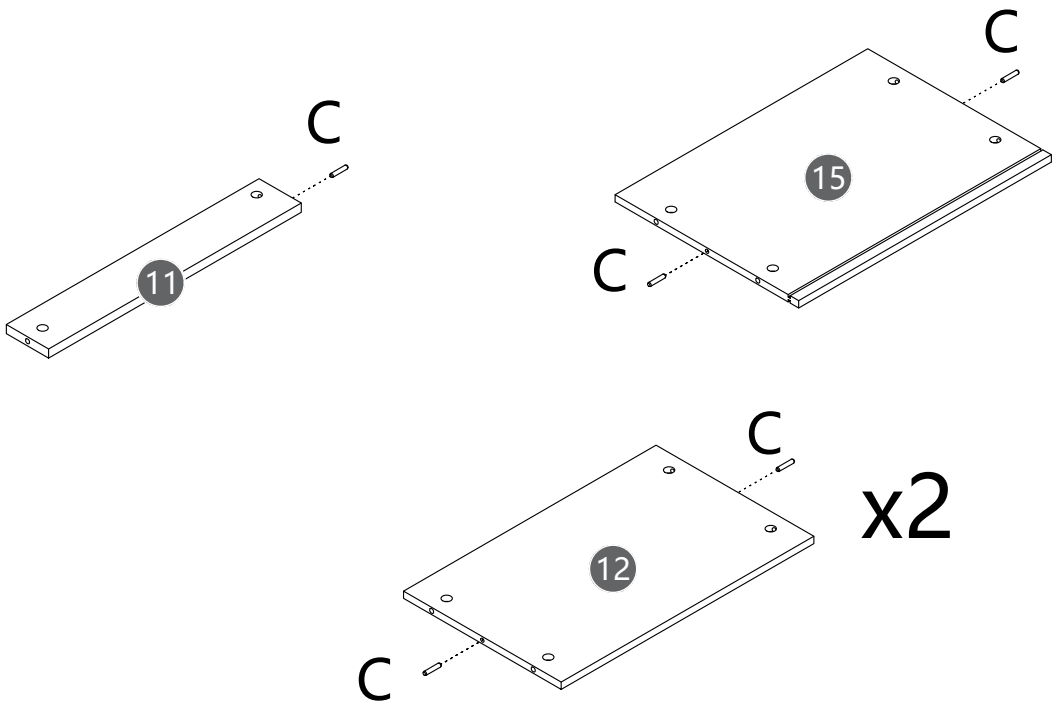

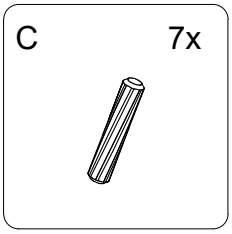

09

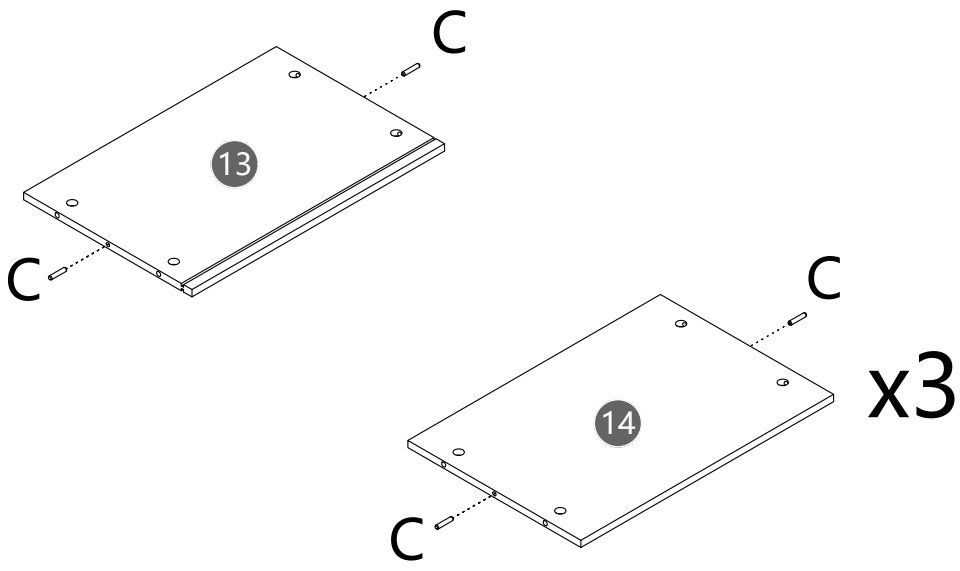

C 8x



10

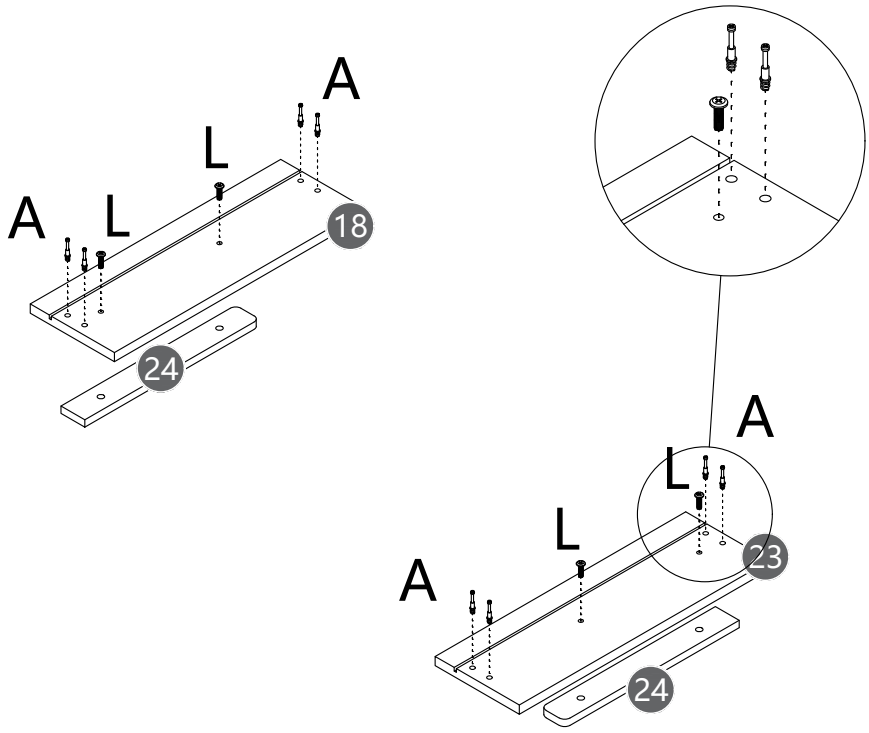

L 4x



A 8x

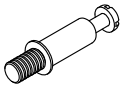

11

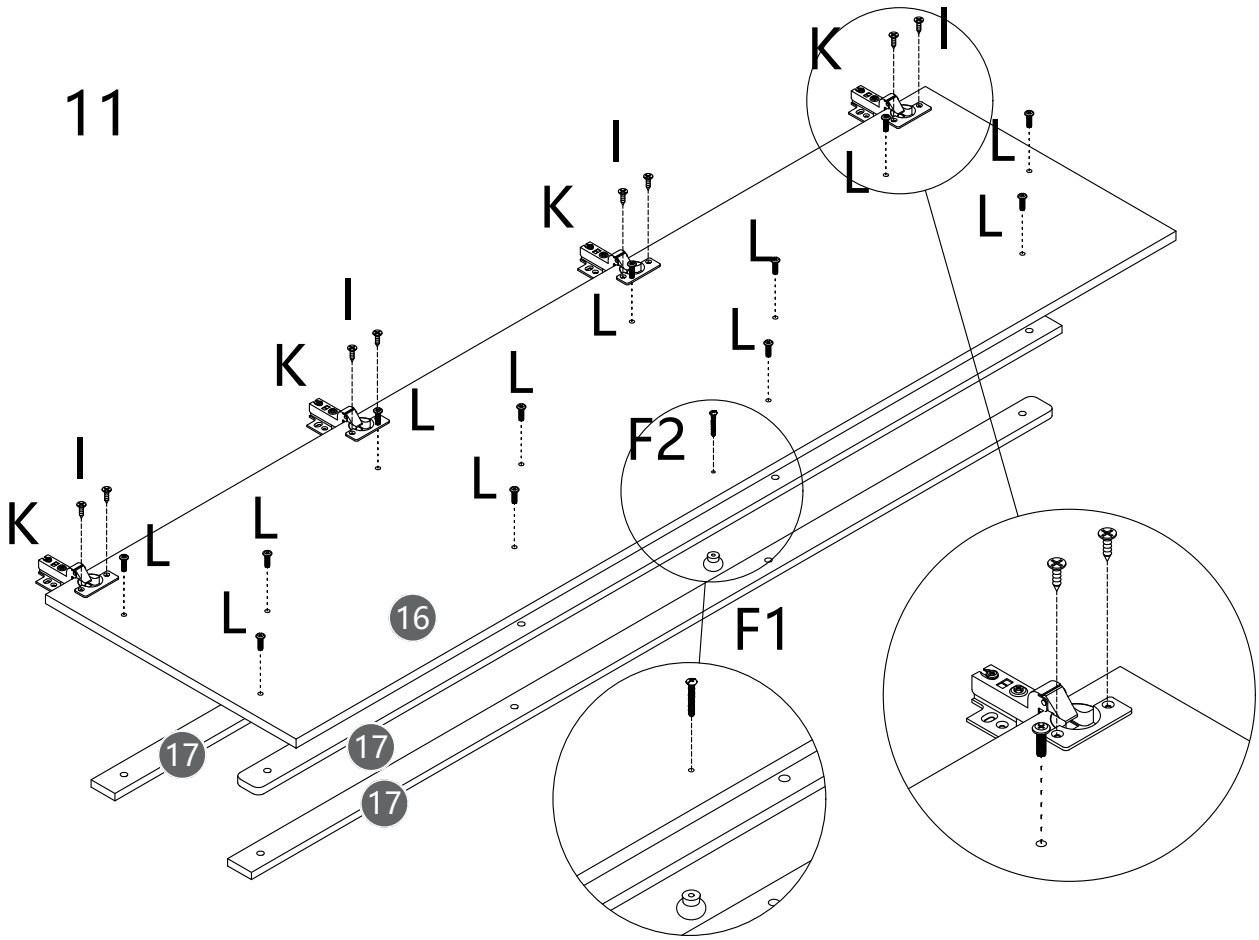

I 8x



K 4x

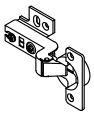

L 12x



F 1x

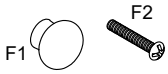

12

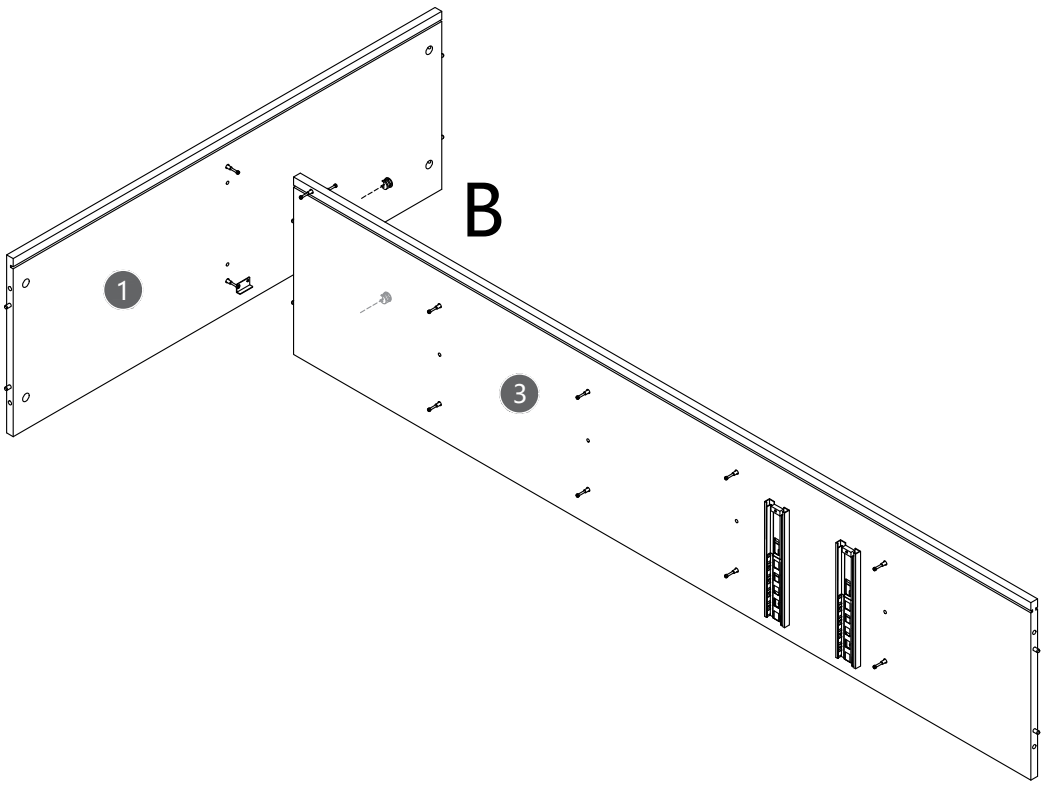

B 2x



13

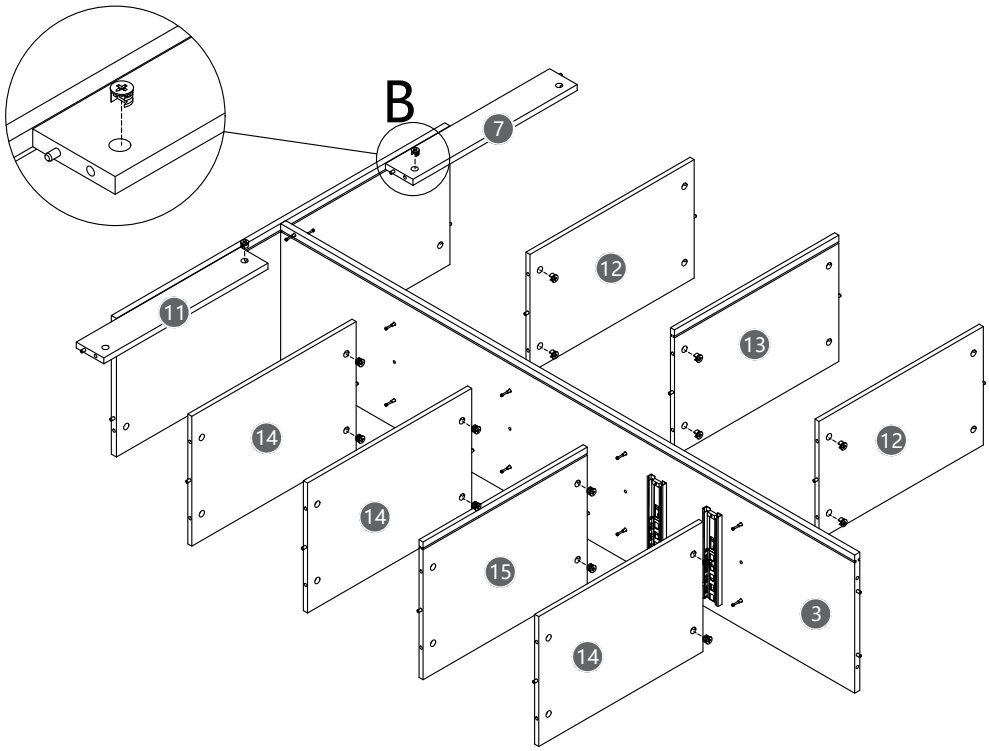

B 16x



14

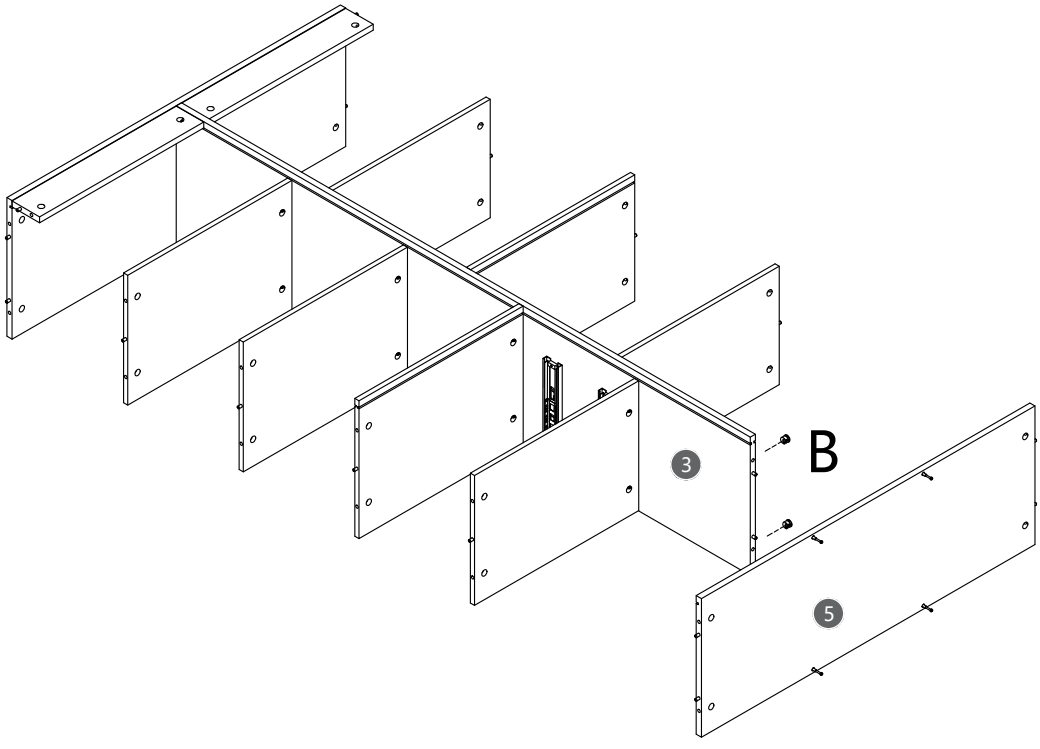

B 2x



15

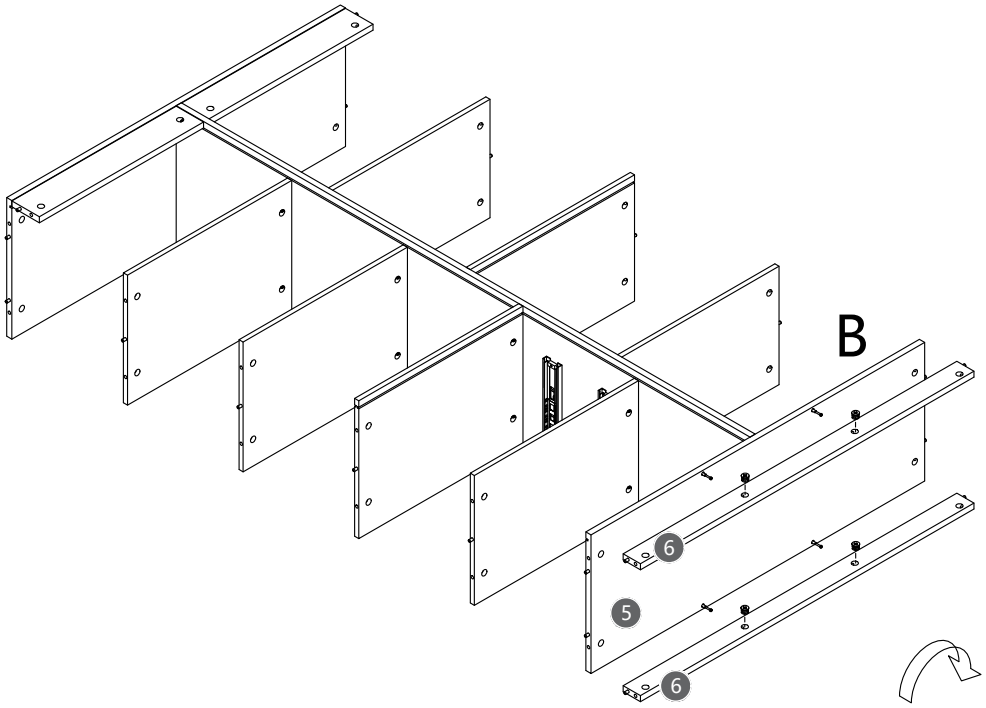

B	4x

16

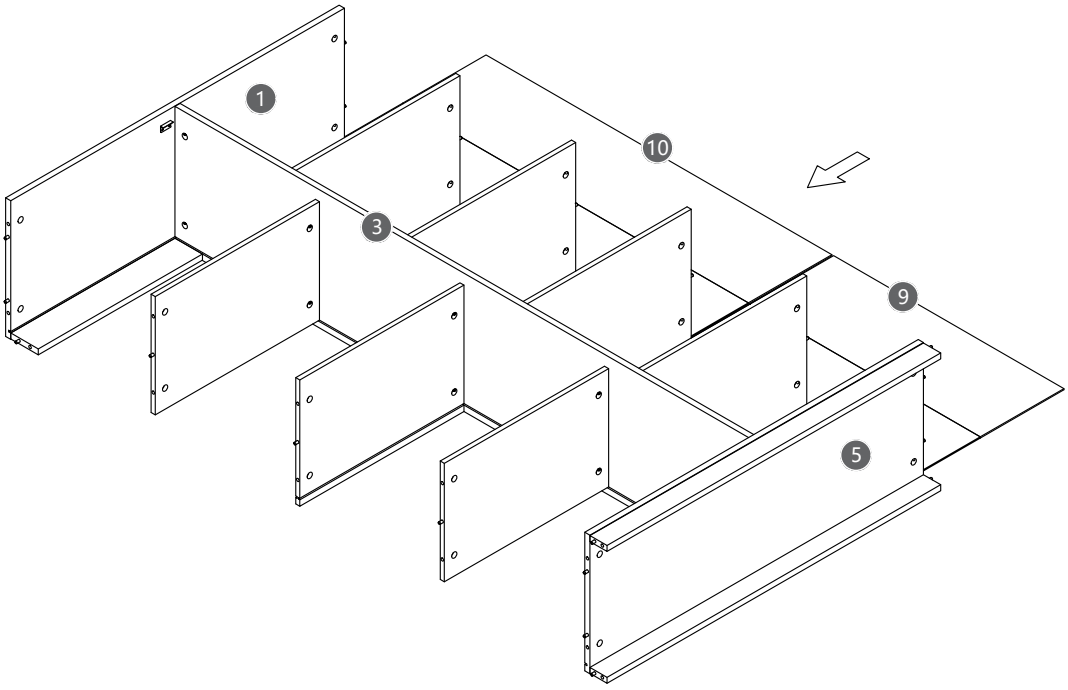

17

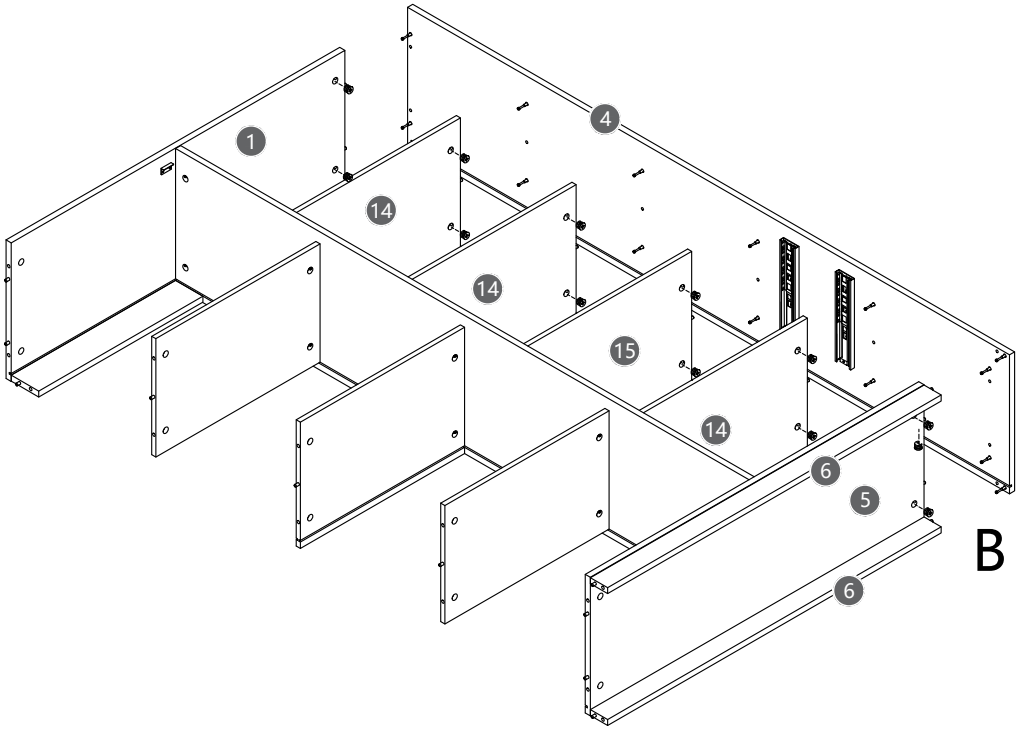

B 13x



18

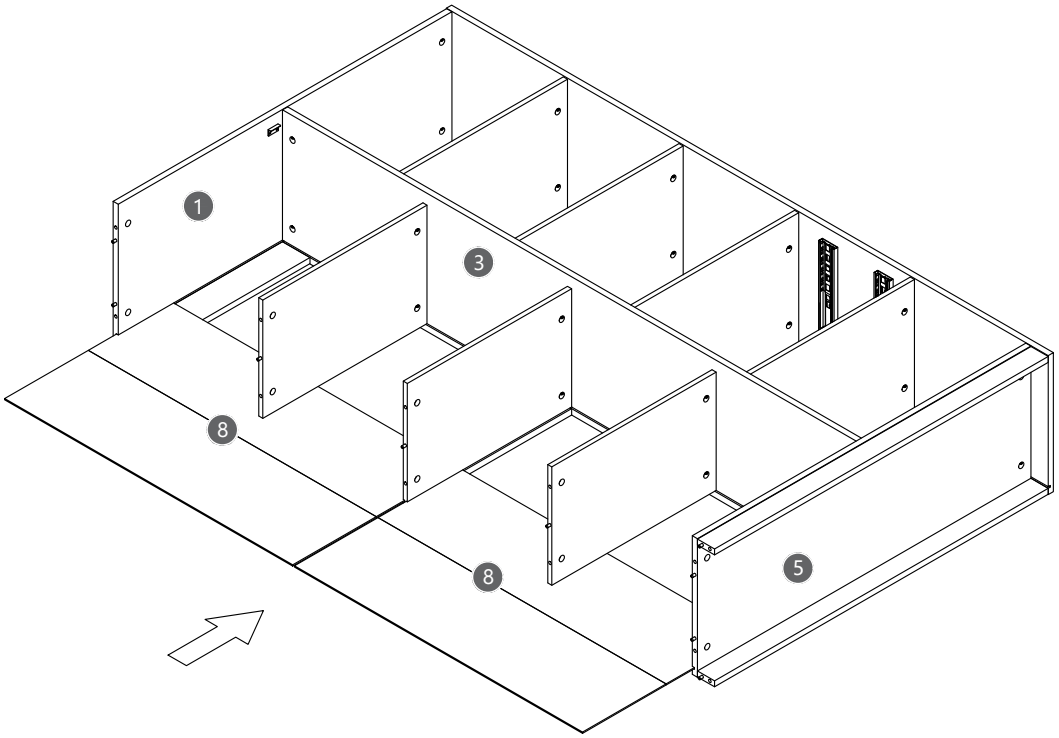

19

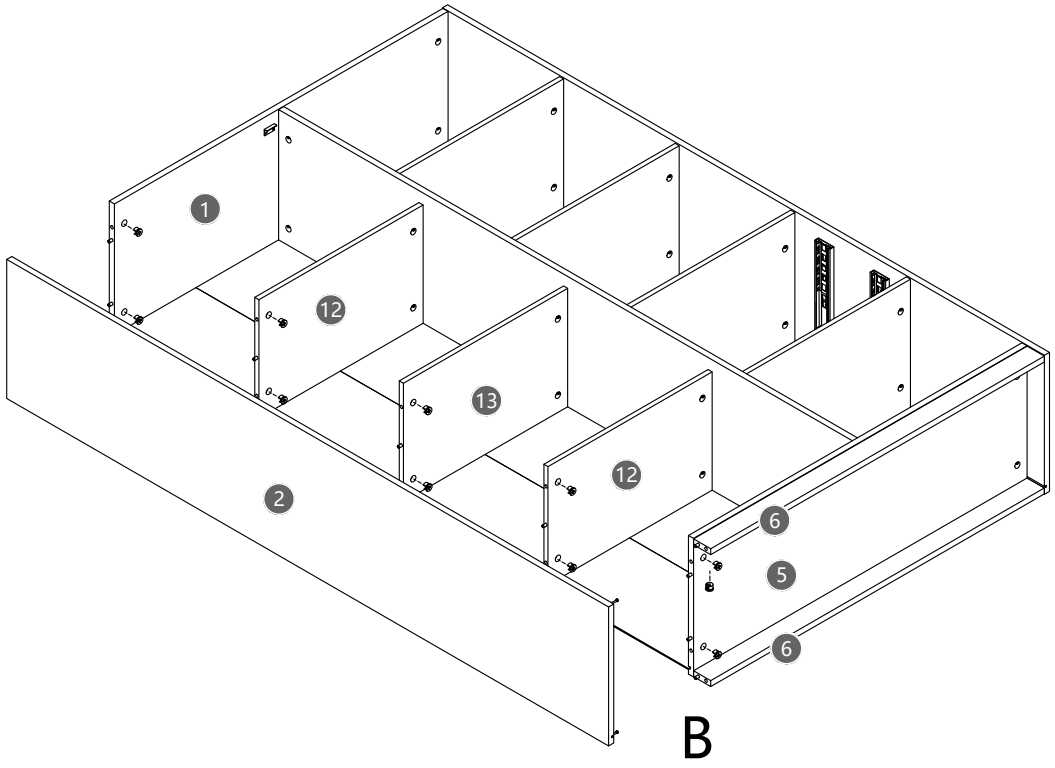

B 11x



20

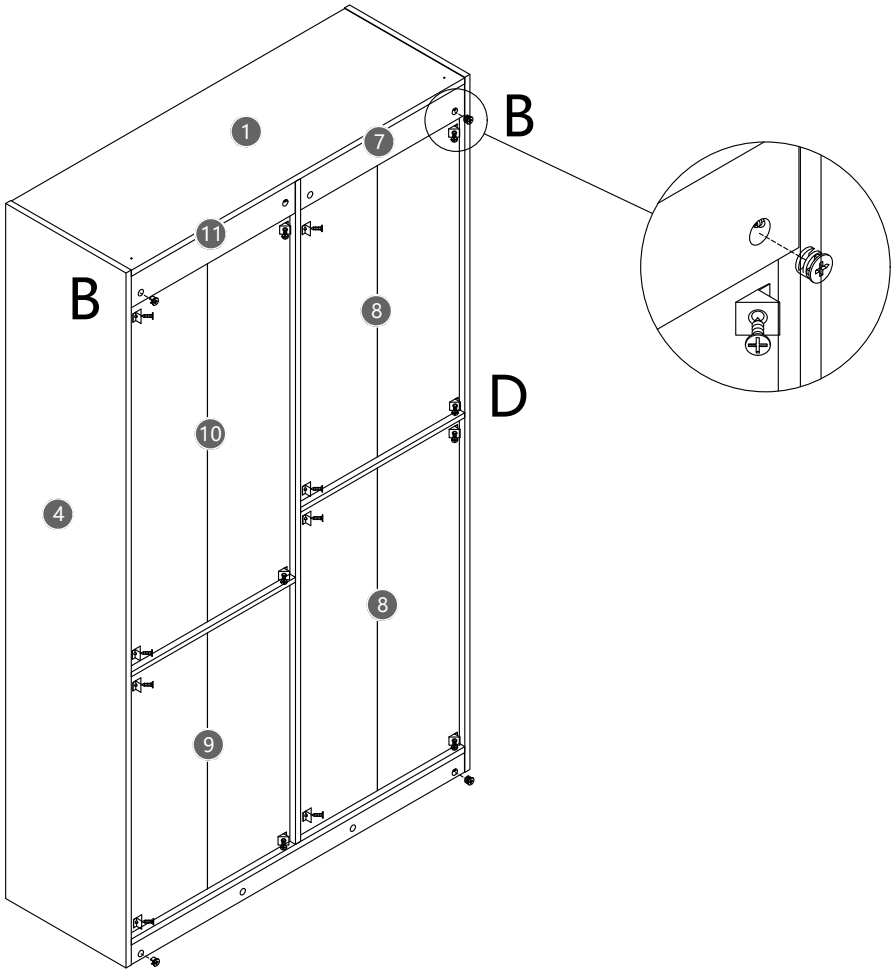

B 2x



D 16x



21

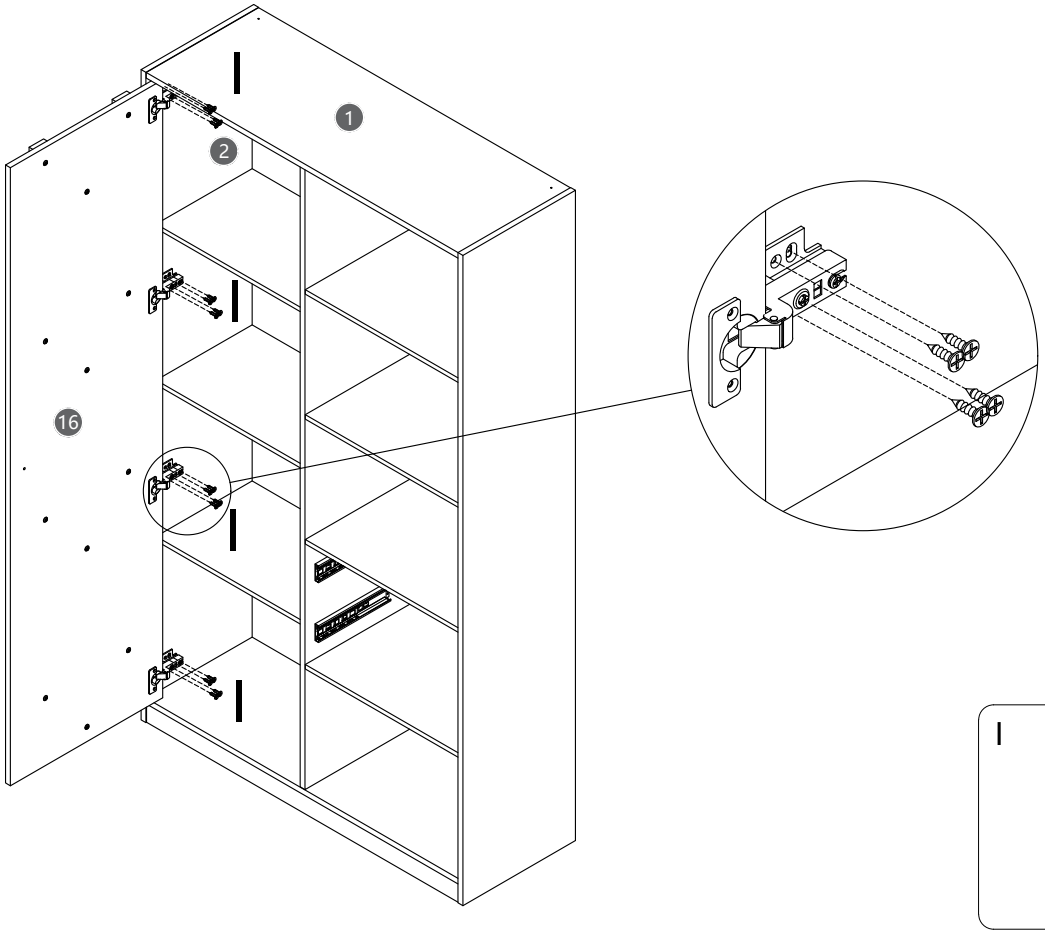

I 16x



22

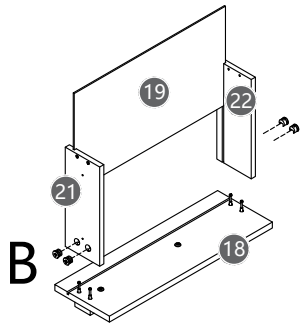

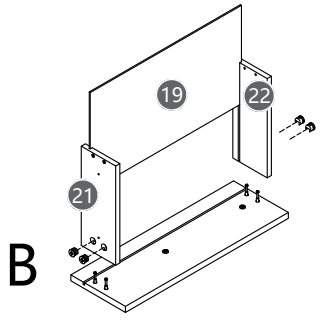

B 8x



23

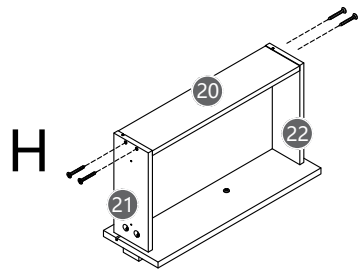

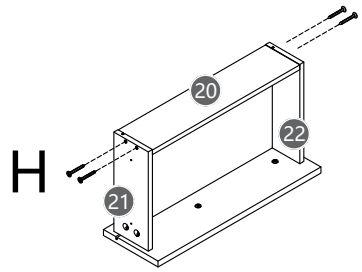

H 8x



24

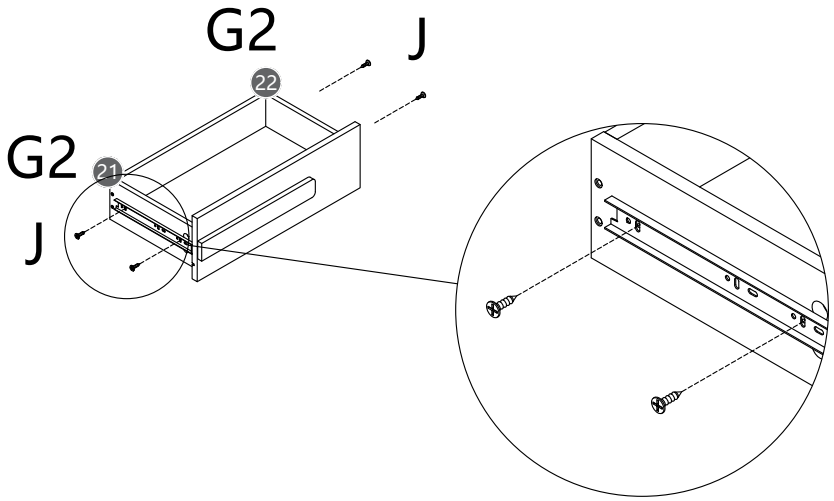

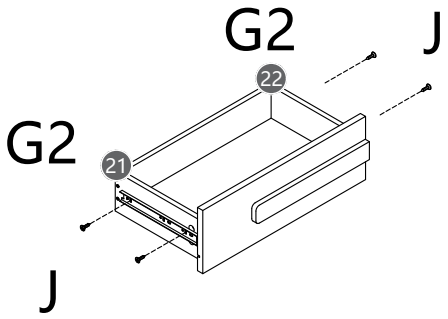

G2 4x

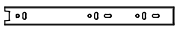

J 8x



25

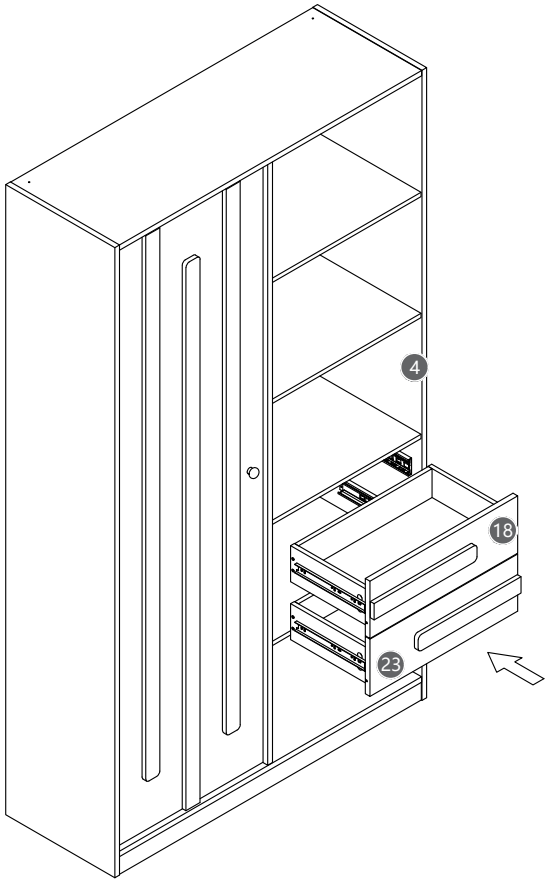

26

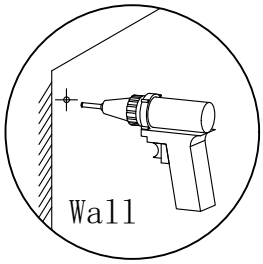

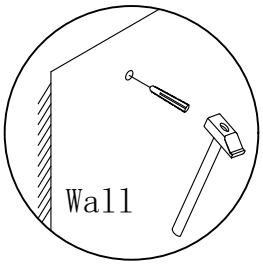

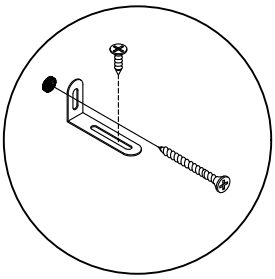

M

