Instruction Manual

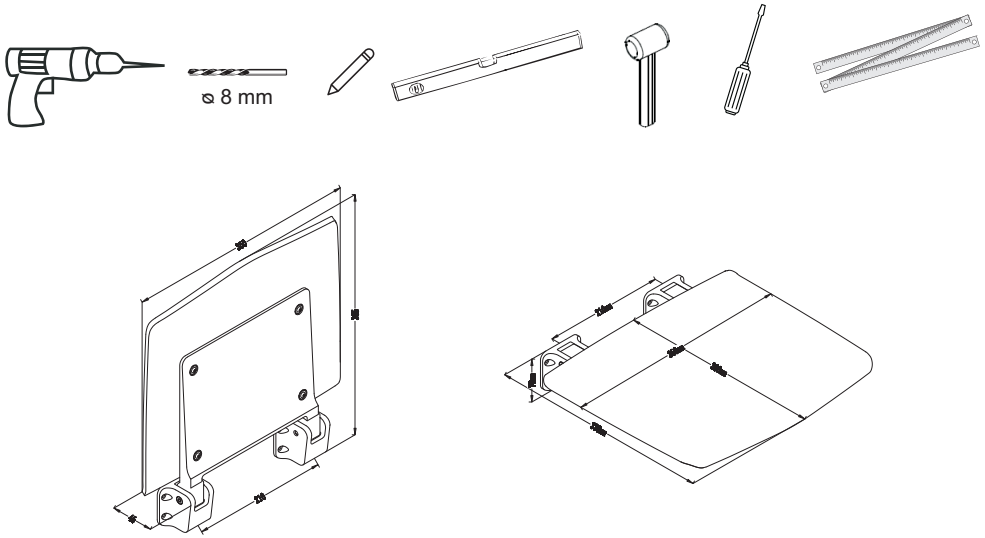

1

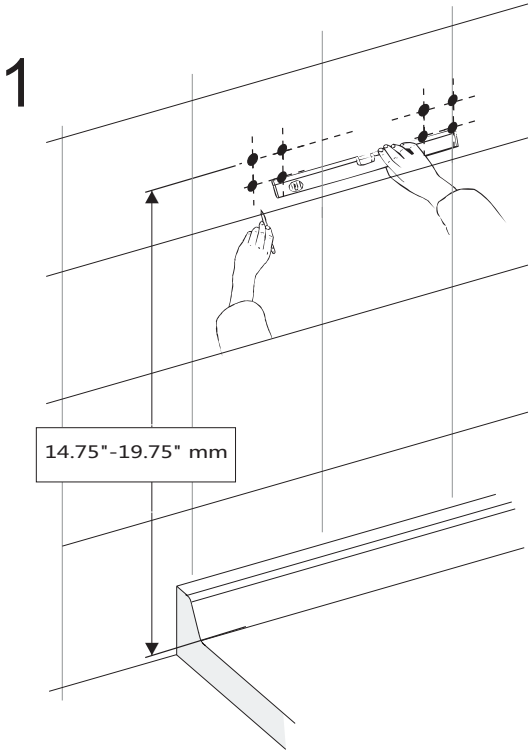

2

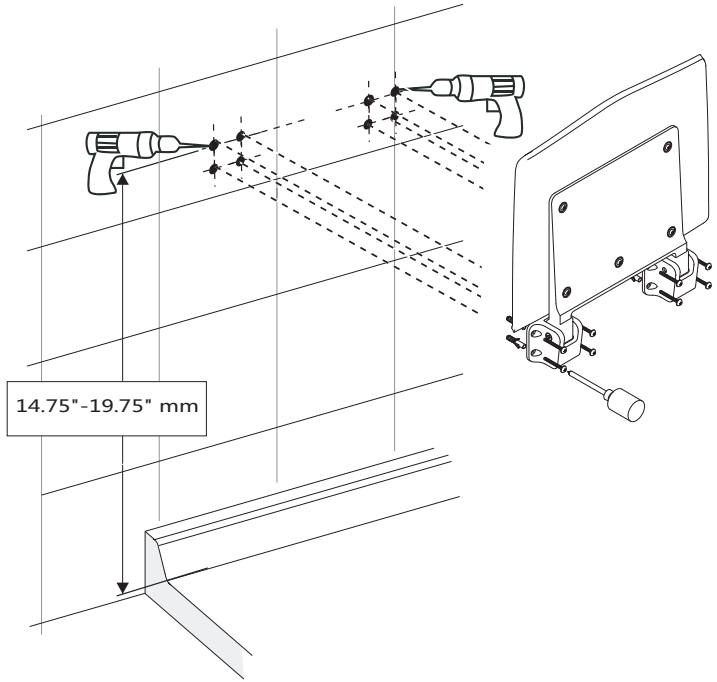

Warning!

The folding wall mounted shower seat is designed withstand a maximum vertical static load of 150KG,exceeding this loading limit may lead permanent damage.
Please use the standard fixing kit for installation on concrete,solid brick, sand-lime perforated brick walls and solid board.
Others walls, such as aerated concrete, plasterboard and gypsum fibre board require extra strengthening.

Cleaning
Only clean and dry the surface with mild-cleanser and soft- cloth.
Never use rough sponges, abrasives, ammonia , bleach or solvent based cleaners.
It is recommended to clean the surface periodically for lucent surface.

Residues of liquid soaps, shampoos and shower foams can also cause damage, so rinse with clean water after using. The damage of already damaged surfaces will deteriorate under the effect of the cleansers. Components with damaged surface must be exchange , otherwise there could be an injury danger.

Instruction Manual

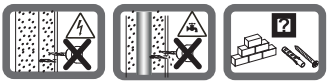

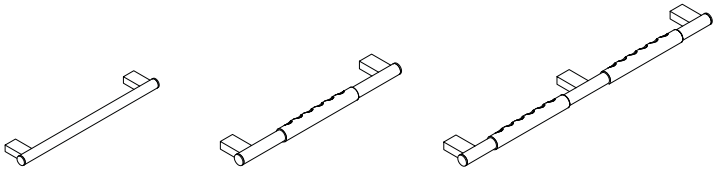

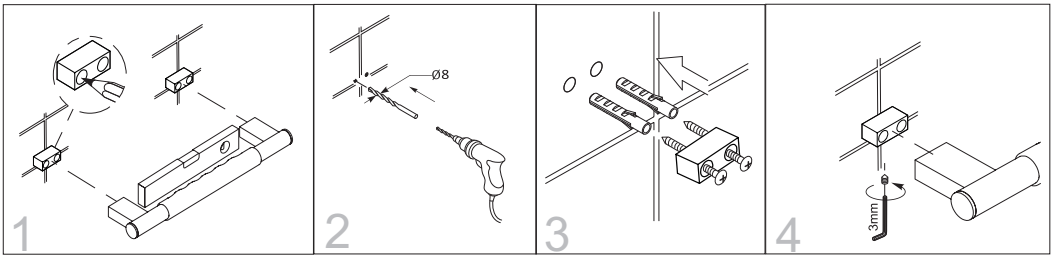

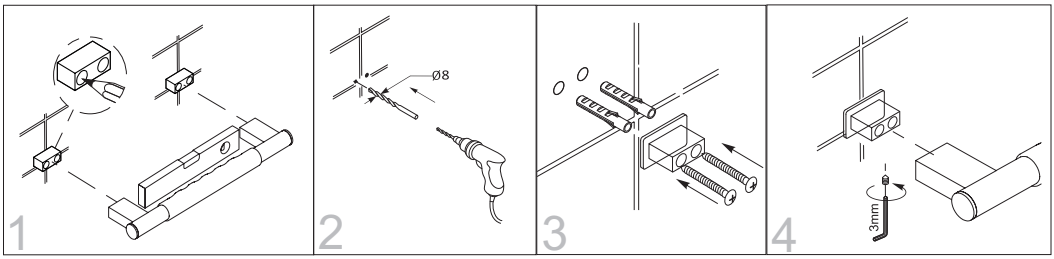

If the wall unevenness , can add one more base plate for each side.

Warning!

Please use the standard fixing kit for installation on concrete, solid brick, sand-lime perforated brick walls and solid board.
Others walls, such as aerated concrete, plasterboard and gypsum fibre board require extra strengthening.

Cleaning
Only clean and dry the surface with mild-cleanser and soft- cloth.
Never use rough sponges, abrasives, ammonia , bleach or solvent based cleaners.
It is recommended to clean the surface periodically for lucent surface.

Residues of liquid soaps, shampoos and shower foams can also cause damage, so rinse with clean water after using. The damage of already damaged surfaces will deteriorate under the effect of the cleansers. Components with damaged surface must be exchange , otherwise there could be an injury danger.