# Cabinet-N752P512372/N752P512373

Assembly Instructions - Please keep for future reference.

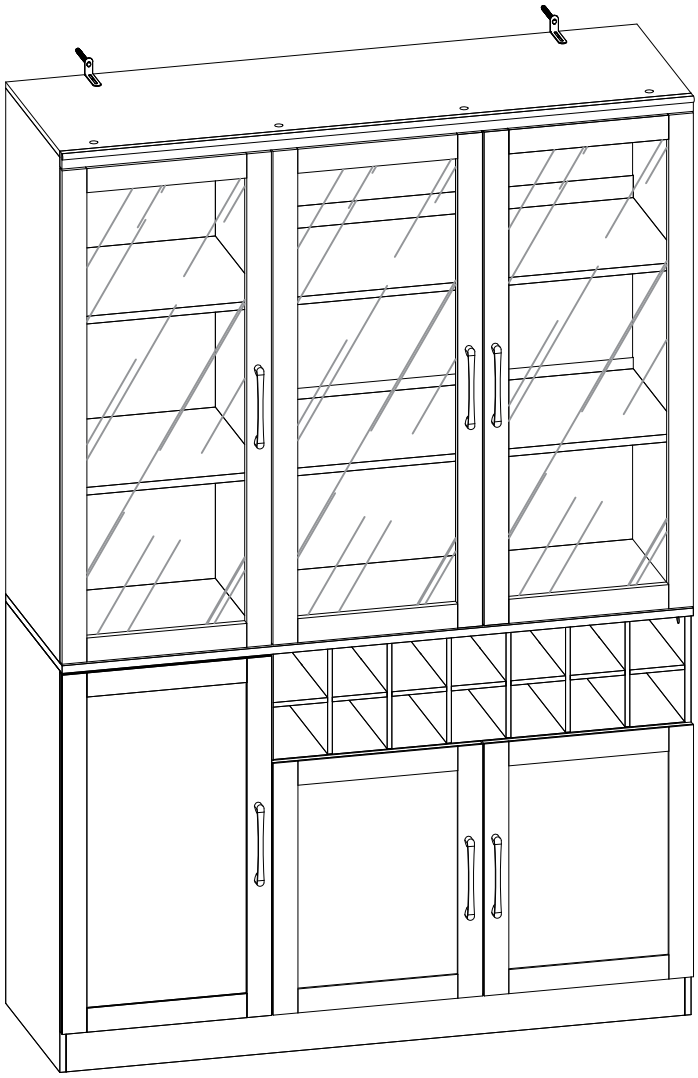

**WARNING**

CSU

This product is NOT a Clothing Storage Unit (CSU).
DO NOT use it for clothing storage.
Improper use may cause furniture tipover.

**AVERTISSEMENT**

CSU

Ce produit N'EST PAS une unité de rangement pour vêtements (CSU).
NE l'utilisez PAS pour le rangement de vêtements.
Une utilisation impropre peut entraîner un basculement des meubles.

Important - Please read these instructions fully before starting assembly.

Thank you for choosing ***our products.***

1. Return Policy




DO NOT RETURN TO THE STORE! Skip the process of returning your product and contact us directly for a replacement

If you find that parts of your order are missing or damaged, we will gladly ship any needed replacement parts free of charge.

If you have found any sort of defect, please contact our customer service department and let us know the details of your order and any issues encountered, we will try our best to provide you with a solution.

Recommendations Before Beginning Assembly

- Read instructions, cover to cover
- Have 2-4 adults on hand for assembly depending on product size
- Do not assemble directly on flooring or carpet
- Assemble on a clean non-marring surface (example: packing foam)
- Save all packaging until finished

3. Assembly Notice:

- If you encounter any problems during assembly and find that you cannot continue, rest assured we will help you solve the situation as soon as possible. Simply keep all of the parts of the product stored in a safe place and contact us immediately so we may assist you further.
- Once you have opened your package, remove all inner hardware packages and take the parts out. One by one, Place the parts out neatly in front of you, then refer to the instructions to ensure no parts are missing. If any pieces are found missing, please carefully look in the box first, as the hardware packaging might have torn making the hardware spill in the box.
- Some key parts of your product may be stored and hidden inside of other parts. Please open any zippered or hook & loop storage compartments to remove all parts. (example: cushions and legs being stored in the underside of a sofa)
- IMPORTANT: When setting up your product, DO NOT INSTALL THE SCREWS ALL THE WAY IN THE BEGINNING. Place each screw into their proper hole and use your hand to twist the screw halfway. Twist all the screws in halfway to ensure the holes will match up properly and the product is level on the ground. When everything seems fitted, then tighten the screws.
- When you have completed assembly, we suggest you have more than one person to assist you with lifting and placing the product.

Care & Maintenance


Do not put hot items directly on furniture surface


Do not clean furniture with harsh cleansers or polish


Do not place furniture under direct sunlight


Do not place furniture near heating or cooling vents


Do not write on furniture without a padded barrier to protect the surface


Do not place furniture outside. For indoor use only


Not for commercial use. For residential use only


Stains may be removed with mild soap solution and damp cloth


Children should not climb or jump on the furniture


Dust and pick-up spills using a clean, non-colored, lint-free cloth

Caution

● This product contains small components. Please ensure that they are kept away from small children.

● Do not use power tools to assemble your furniture. Power tools may strip or damage the parts.

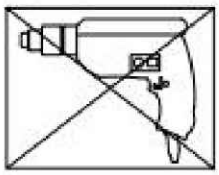

# Assembly Instructions

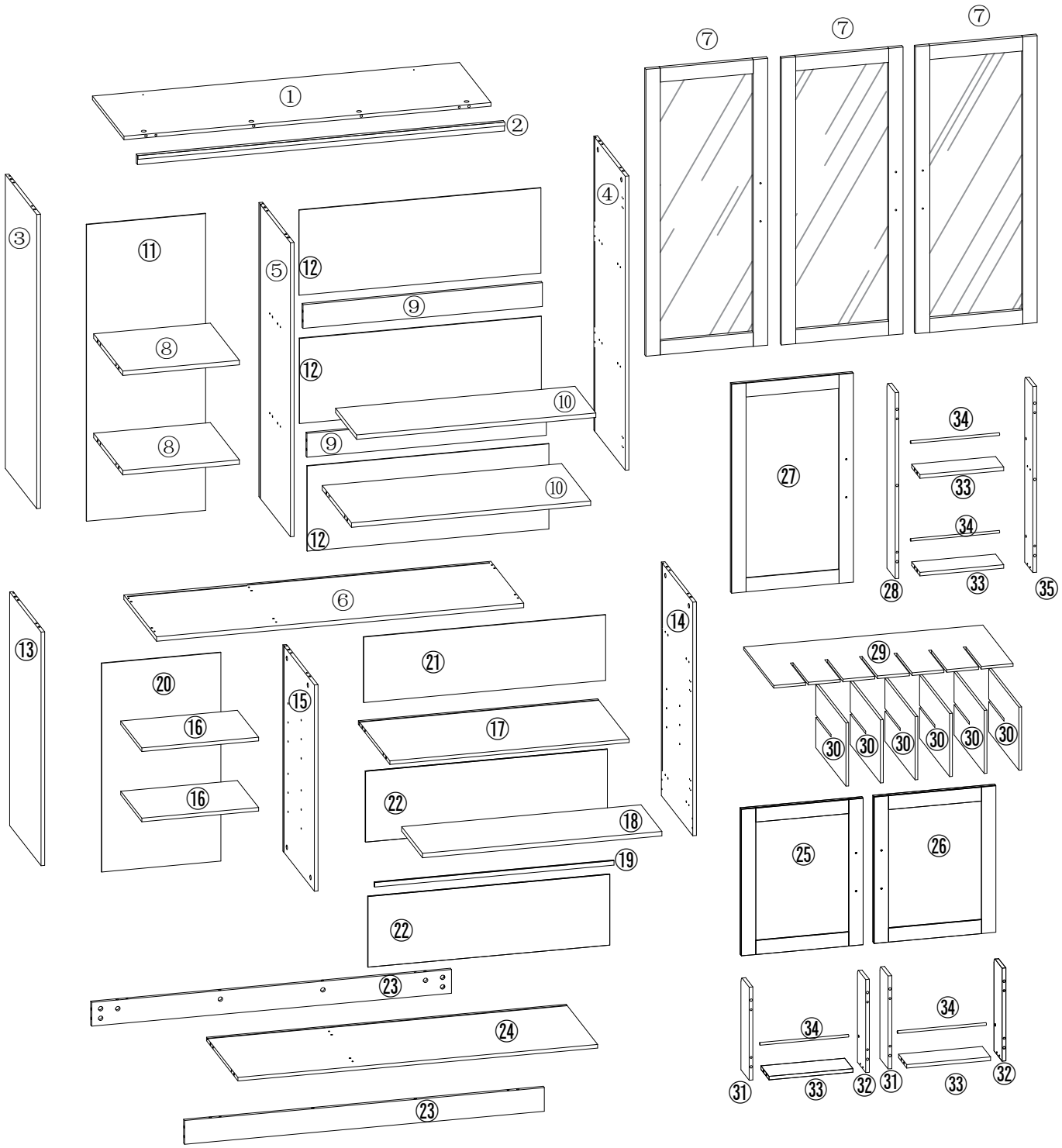

# components - fittings

## Please check you have all the panels listed below.

Note: The quantities below are the correct amounts to complete the assembly. **In some cases more fittings may be supplied than are required.**

**N752P512372 - Box:1/2**

| | | | |
|---|---|---|---|
| 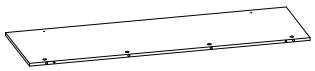 |  |  |  |
| ① x 1pc | ② x 1pc | ③ x 1pc | ④ x 1pc |
|  |  |  |  |
| ⑤ x 1pc | ⑥ x 1pc | ⑦ x 3pcs | ⑨ x 2pcs |
|  |  |  |  |
| ⑪ x 1pc | ⑲ x 1pc | ㉓ x 2pcs | ㉔ x 1pc |
| 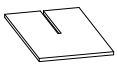 | 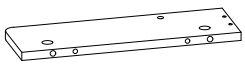 |  |  |
| ㉚ x 3pcs | ㉛ x 2pcs | ㉜ x 2pcs | ㉞ x 4pcs |

Note：This product includes two boxes. Please make sure both boxes are opened before assembly.

N752P512373 - Box:2/2

| | | | |
|---|---|---|---|
|  |  |  | 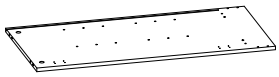 |
| ⑧ x 2pcs | ⑩ x 2pcs | ⑫ x 3pcs | ⑬ x 1pc |
| 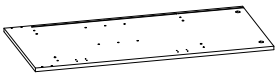 | 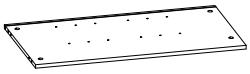 |  |  |
| ⑭ x 1pc | ⑮ x 1pc | ⑯ x 2pcs | ⑰ x 1pc |
|  | 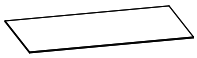 |  |  |
| ⑱ x 1pc | ⑳ x 1pc | ㉑ x 1pc | ㉒ x 2pcs |
|  | 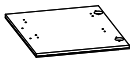 |  |  |
| ㉕ x 1pc | ㉖ x 1pc | ㉗ x 1pc | ㉘ x 1pc |
|  | 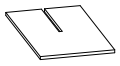 |  | 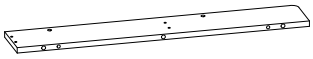 |
| ㉙ x 1pc | ㉚ x 3pcs | ㉝ x 4pcs | ㉟ x 1pc |

Note：This product includes two boxes. Please make sure both boxes are opened before assembly.

# components - fittings

## Please check you have all the panels listed below.

Note: The quantities below are the correct amounts to complete the assembly. **In some cases more fittings may be supplied than are required.**

**Hardware-Liste :N752P512372- Box:1/2**

| | | | |
|---|---|---|---|
| 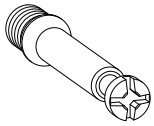 M6x35mm |  Φ15x9mm |  Φ6x30mm |  |
| A x 96pcs | B x 96pcs | C x62pcs | D x 12pcs |
| 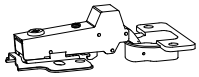 |  M3x16mm |  M4x18mm |  |
| E x 4pcs | F x 40pcs | G x 12pcs | H x 24pcs |
| 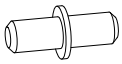 | 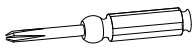 |  |  M4x14mm |
| I x 12 pcs | J x 1 pc | K x 6 pcs | L x 73 pcs |
|  |  M4x45mm | 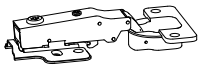 |  |
| M x 40 pcs | N x 6 pcs | O x 8pcs | S x 1 pc |

Prevent dumping of spare parts+ N752P512373 - Box:2/2

| | | | |
|---|---|---|---|
| 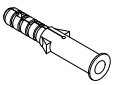 |  M4x35mm |  M4x14mm | 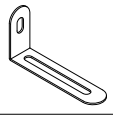 |
| P x 2pcs | Q x 2pcs | L x 2pcs | R x 2pcs |

# 1.

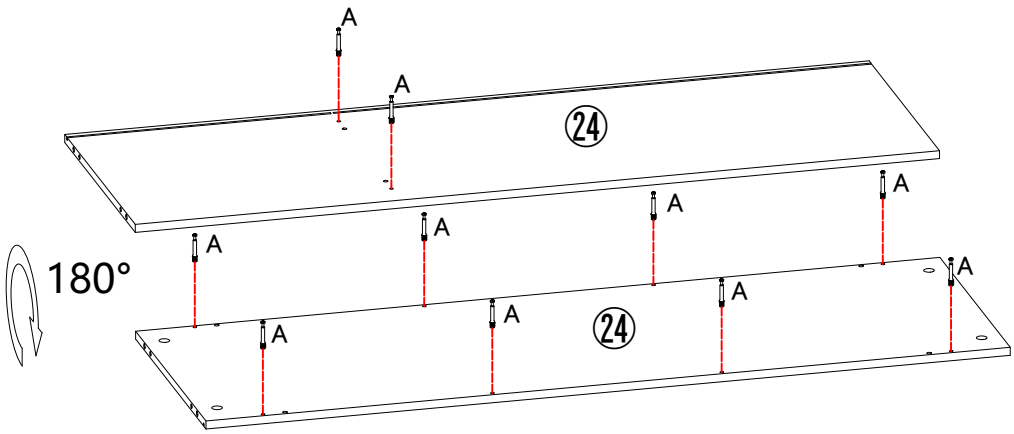


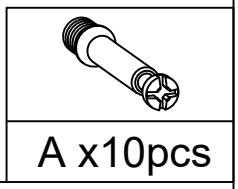

A x10pcs

# 2.

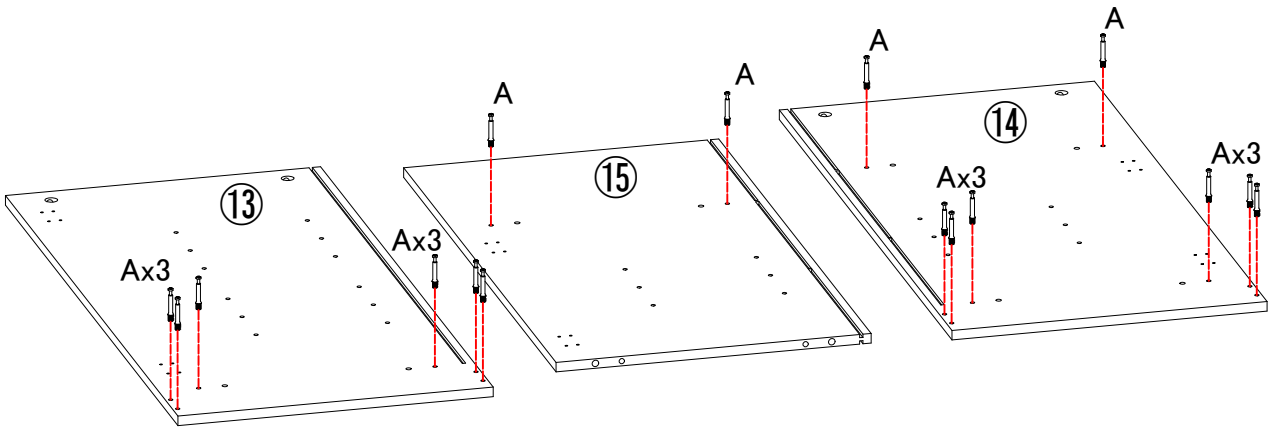


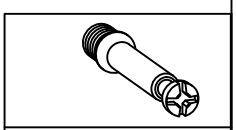

A x 16pcs

# 3.

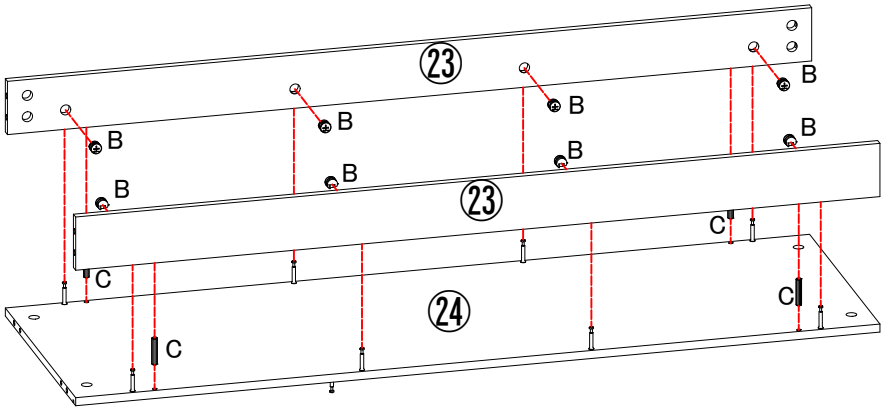


| | |
|---|---|
|  |  |
| B x8pcs | C x 4pcs |

# 4.

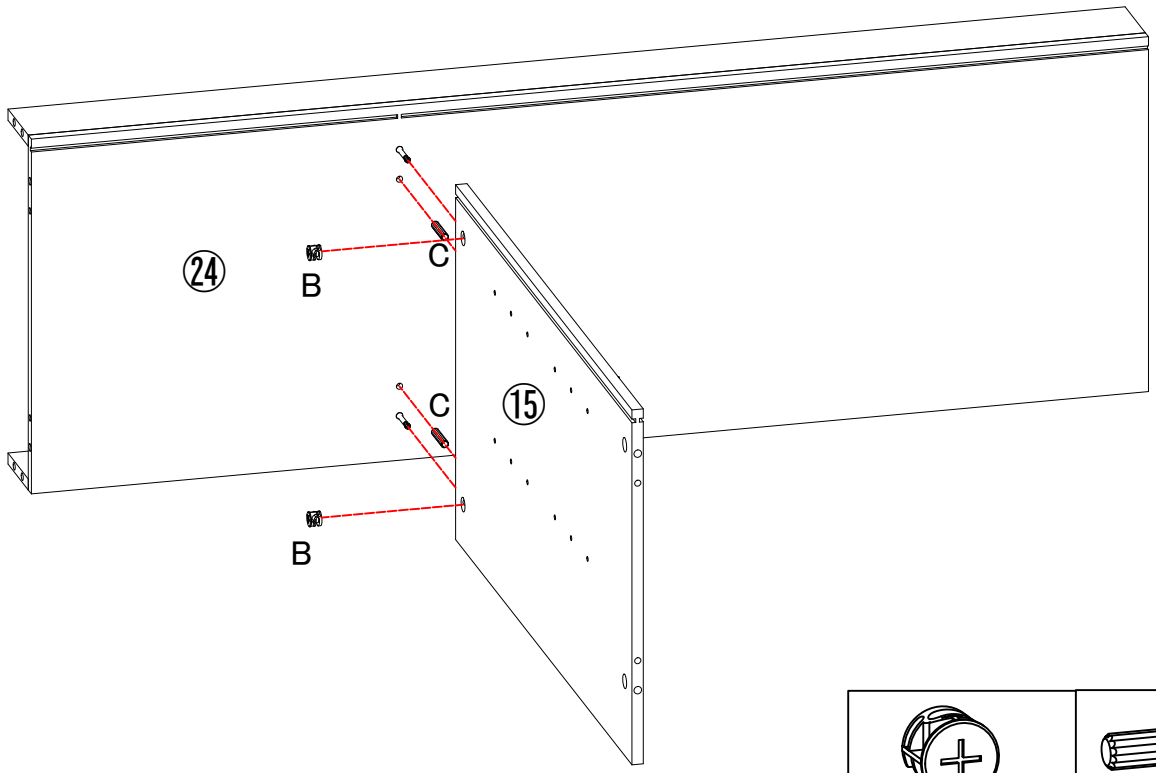


| | |
|---|---|
|  |  |
| B x2pcs | C x 2pcs |

# 5.

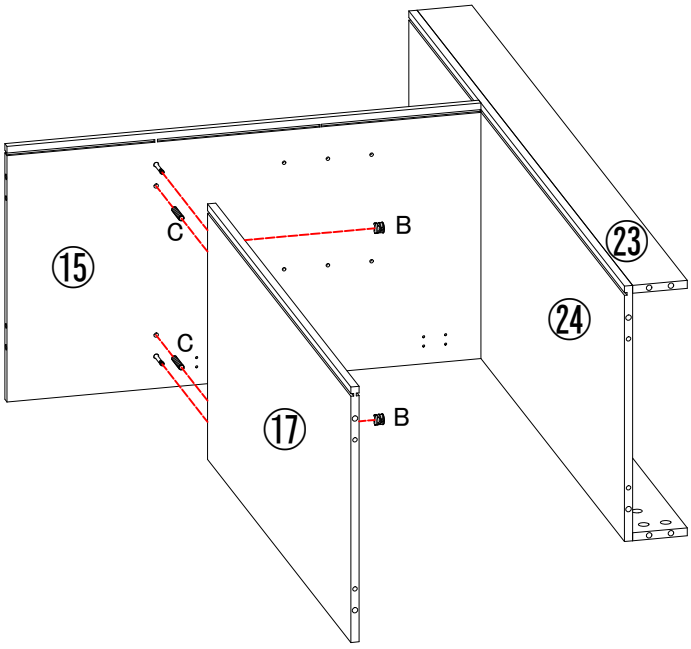


| | |
|---|---|
|  | 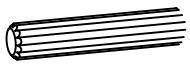 |
| B x2pcs | C x 2pcs |

# 6.

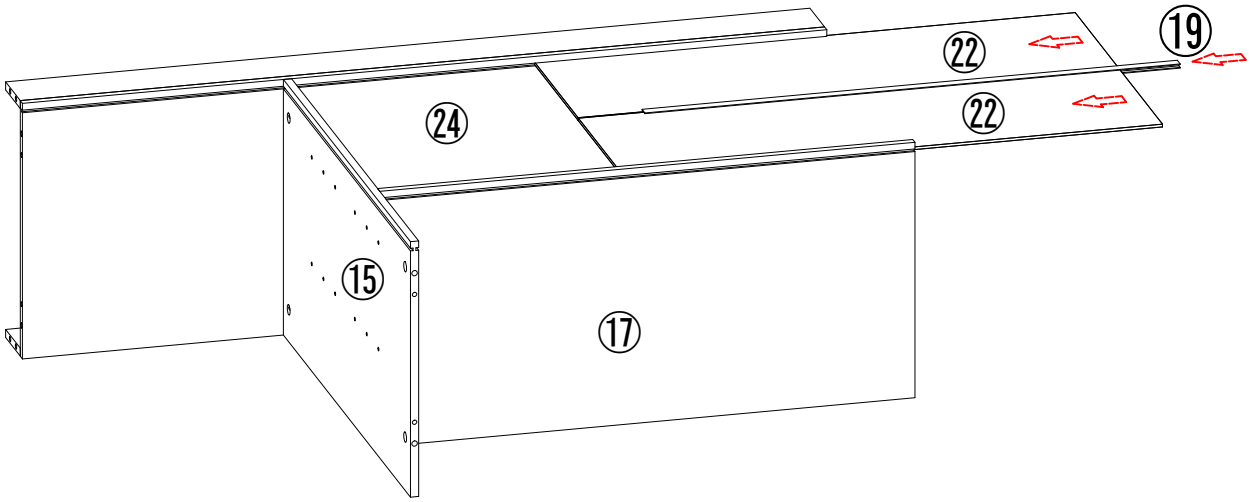

# 7.

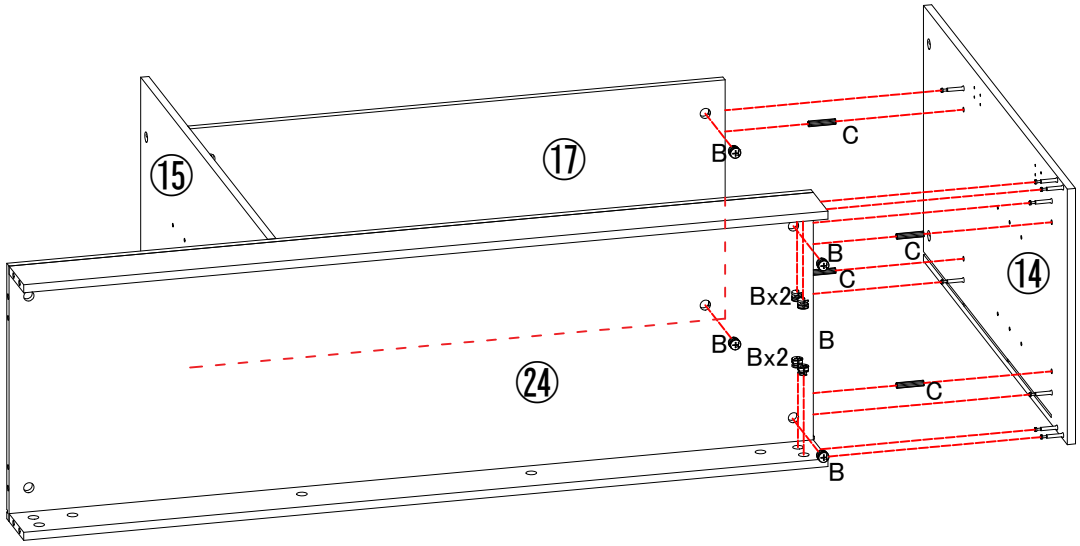


| | |
|---|---|
|  |  |
| B x8pcs | C x 4pcs |

# 8.

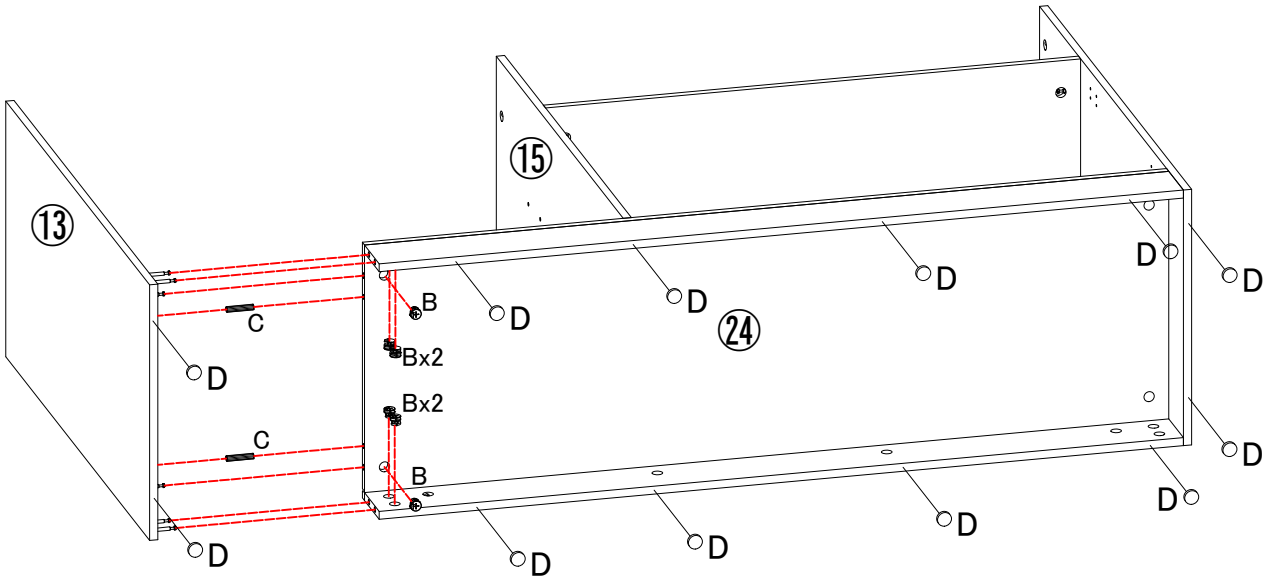


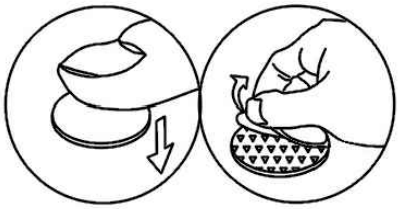

| | | |
|---|---|---|
|  |  |  |
| B x6pcs | C x 2pcs | D x 12pcs |

# 9.

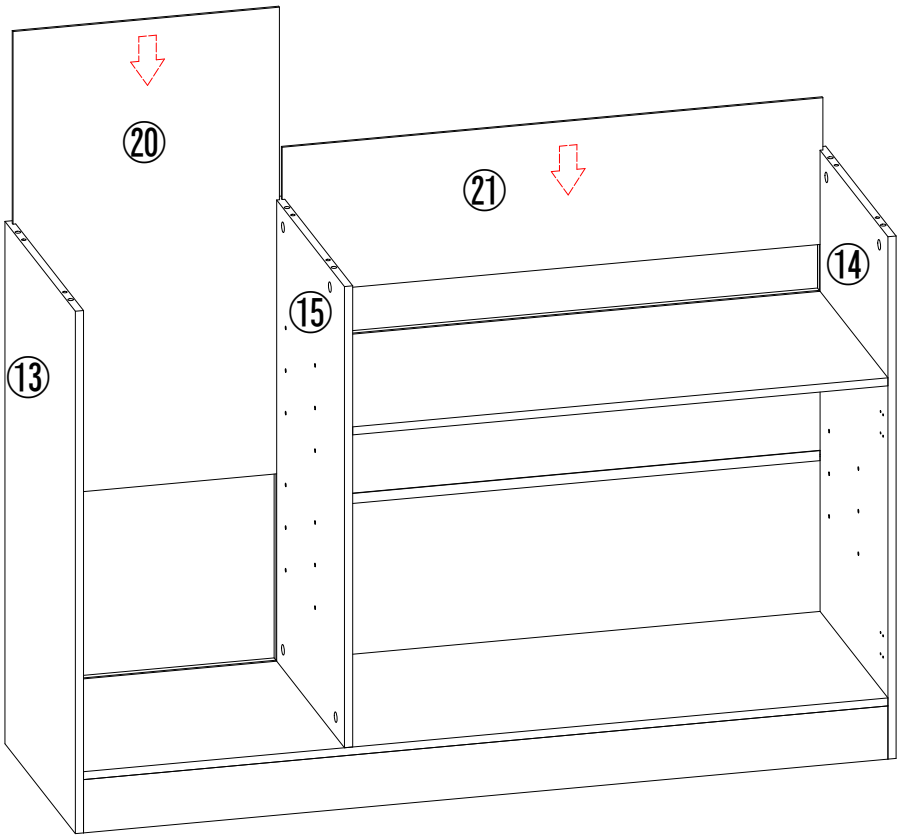


# 10.

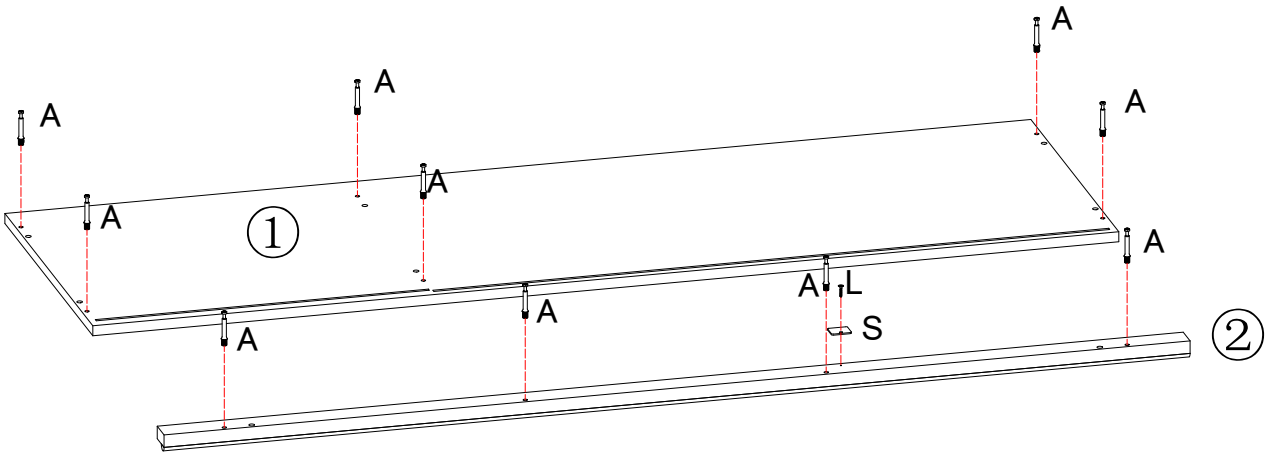


| | | |
|---|---|---|
| 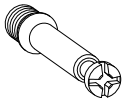 |  |  |
| A x10pcs | L x1pc | S x1pc |

# 11.

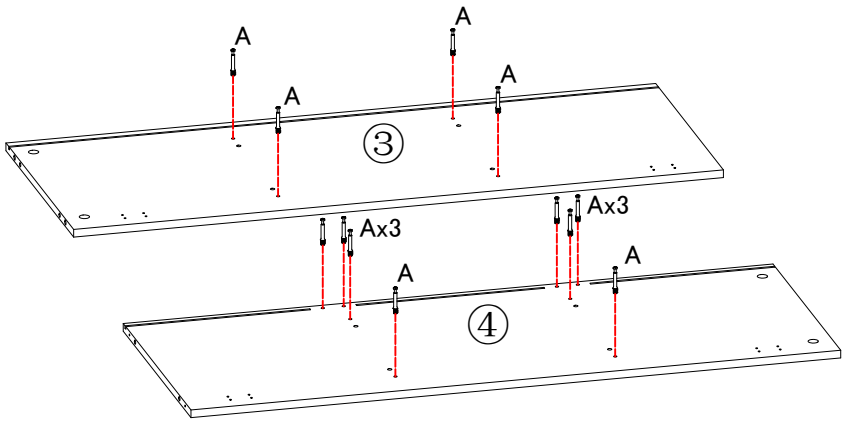


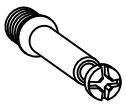

A x12pcs

# 12.

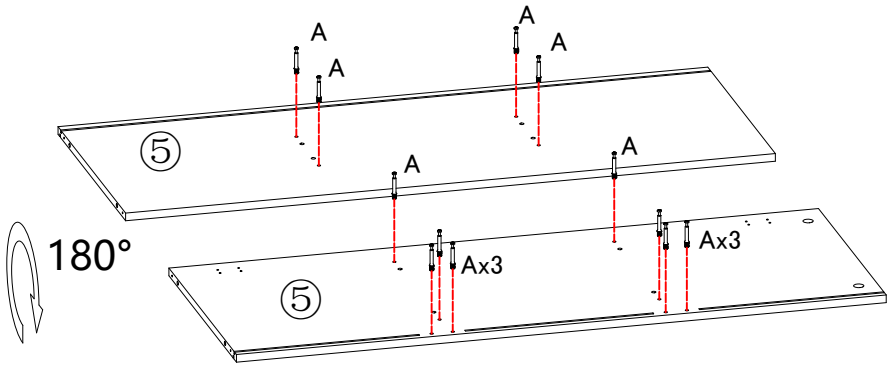


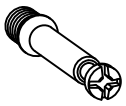

A x12pcs

# 13.

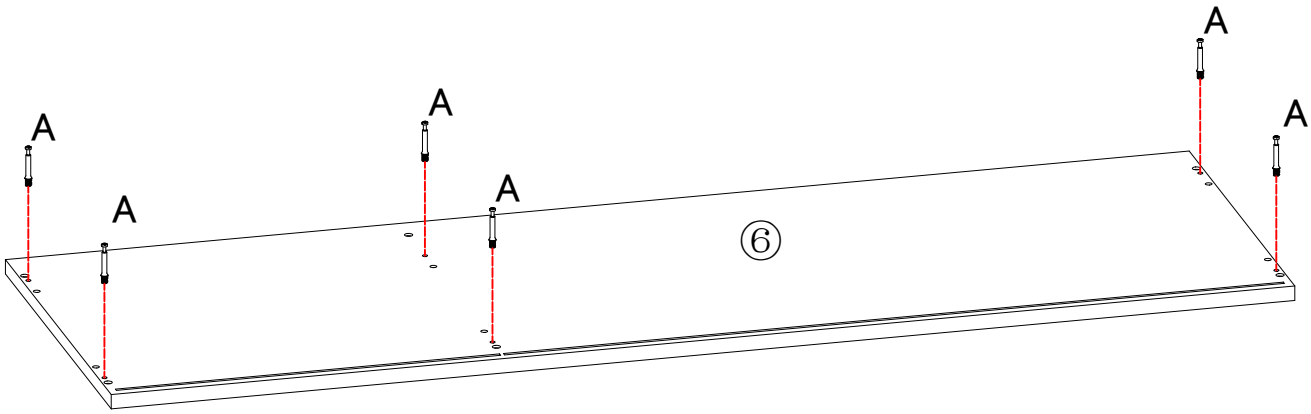


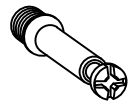

A x 6pcs

# 14.

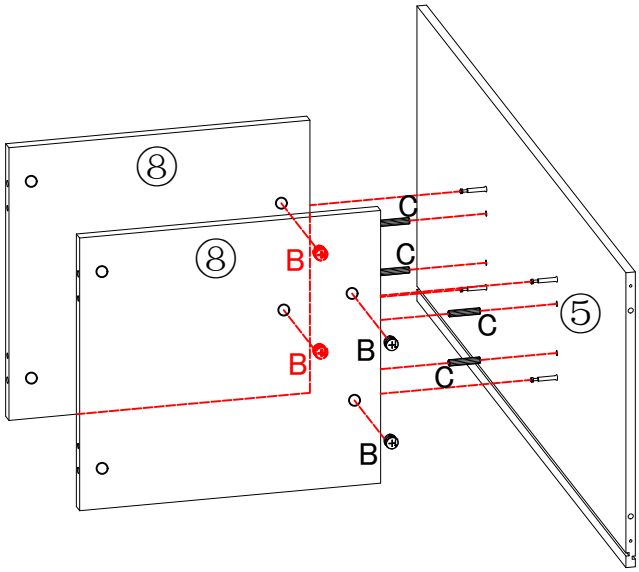




B x4pcs



C x 4pcs

# 15.

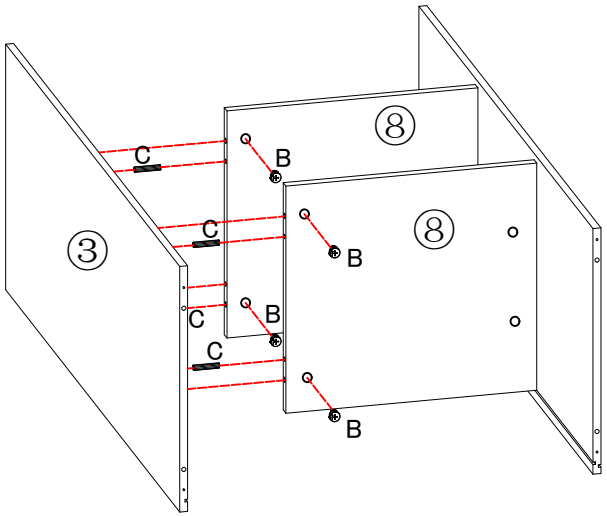


| | |
|---|---|
| 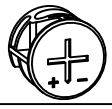 |  |
| B x4pcs | C x 4pcs |

# 16.

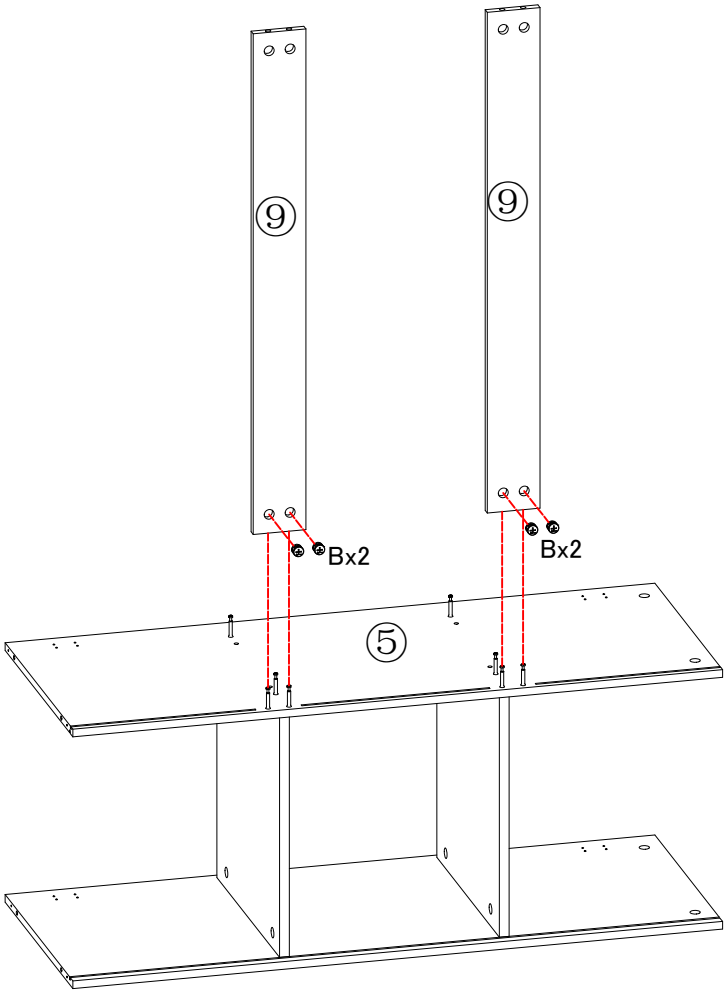


| |
|---|
|  |
| B x4pcs |

17.

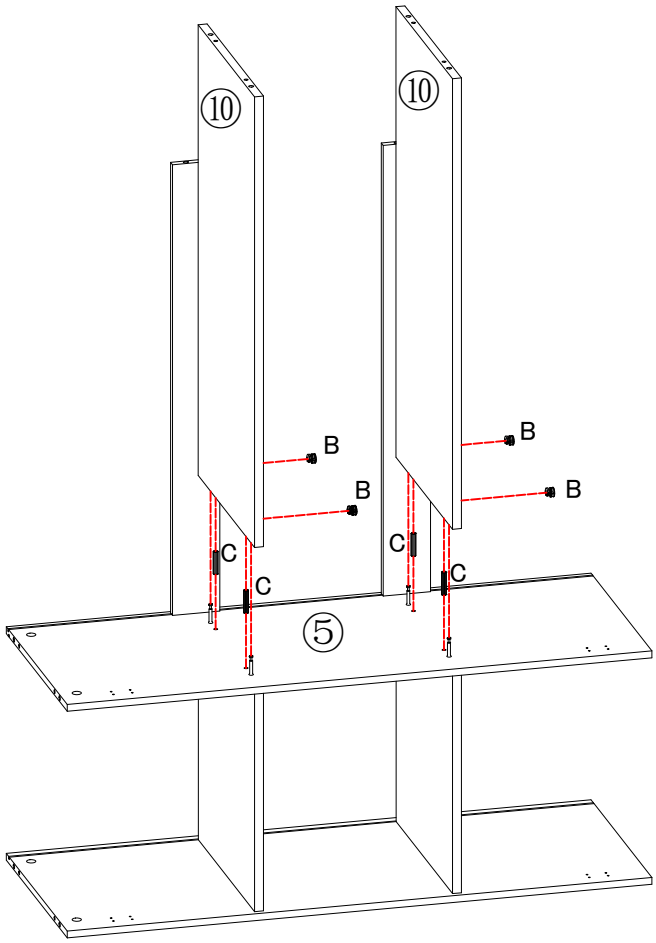


| | |
|---|---|
| 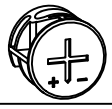 |  |
| B x4pcs | C x 4pcs |

18.

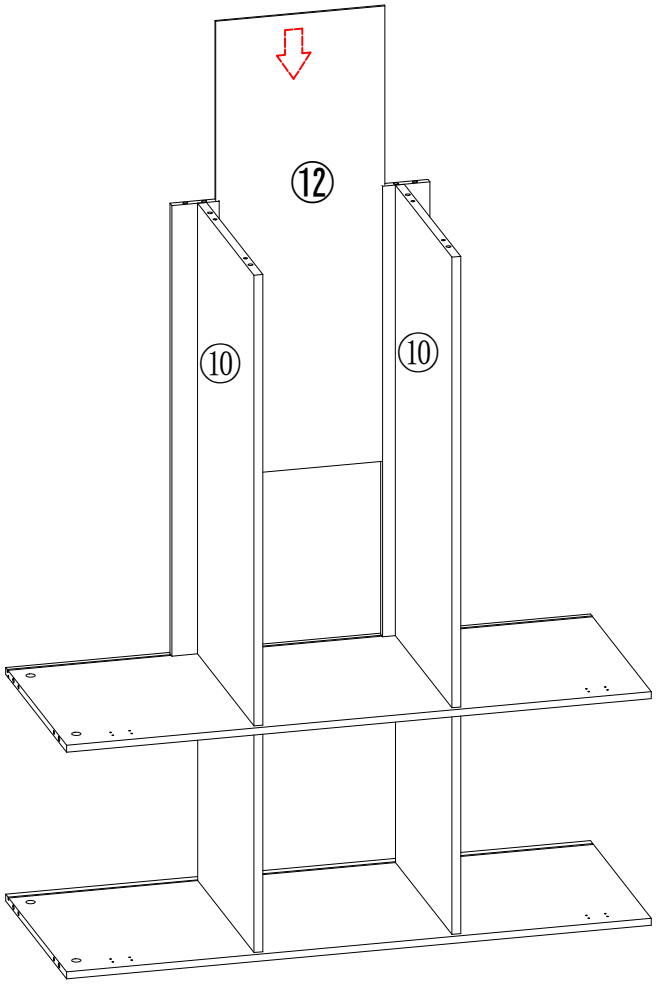

# 19.

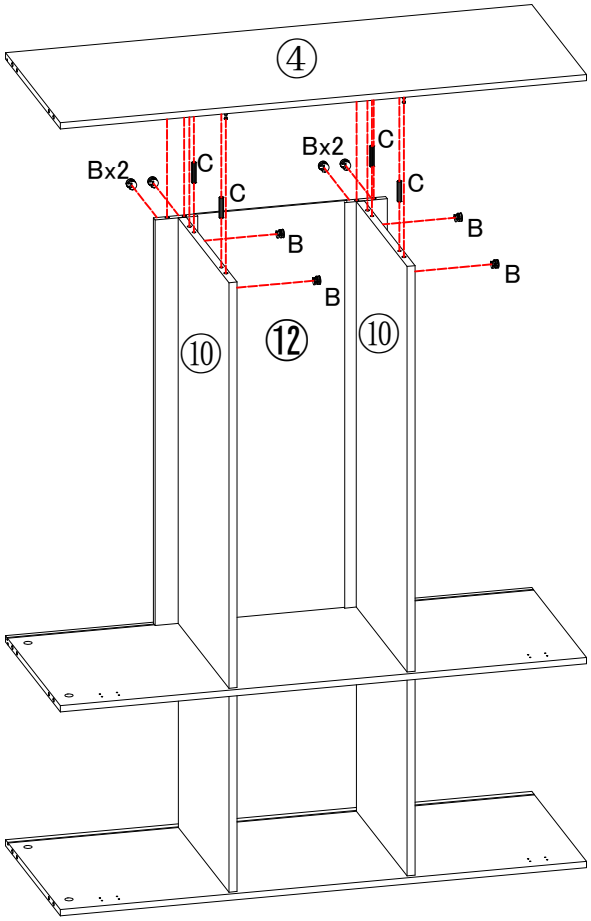


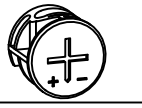

B x8pcs



C x 4pcs

# 20.

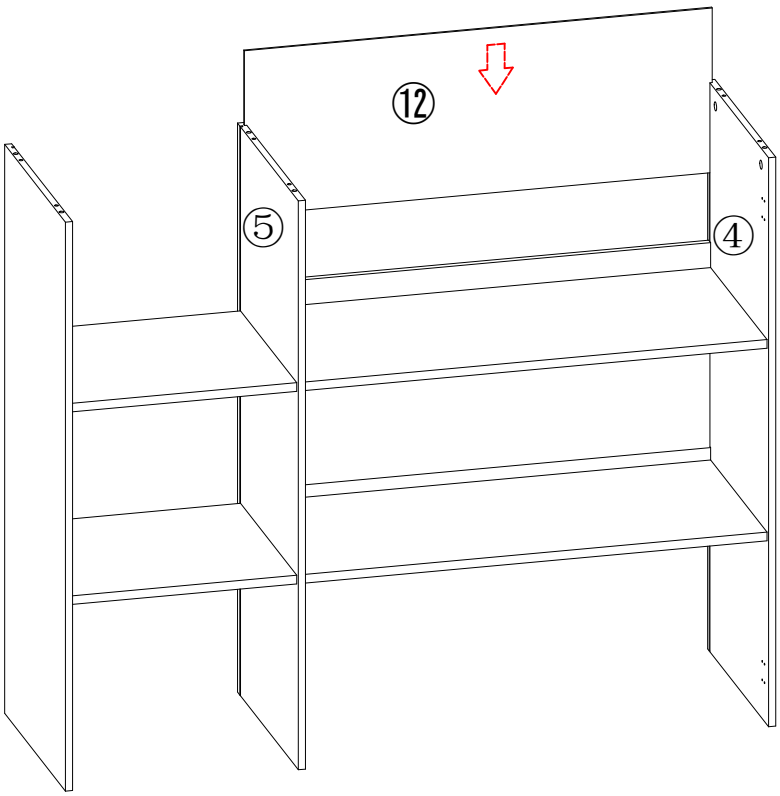

# 21.

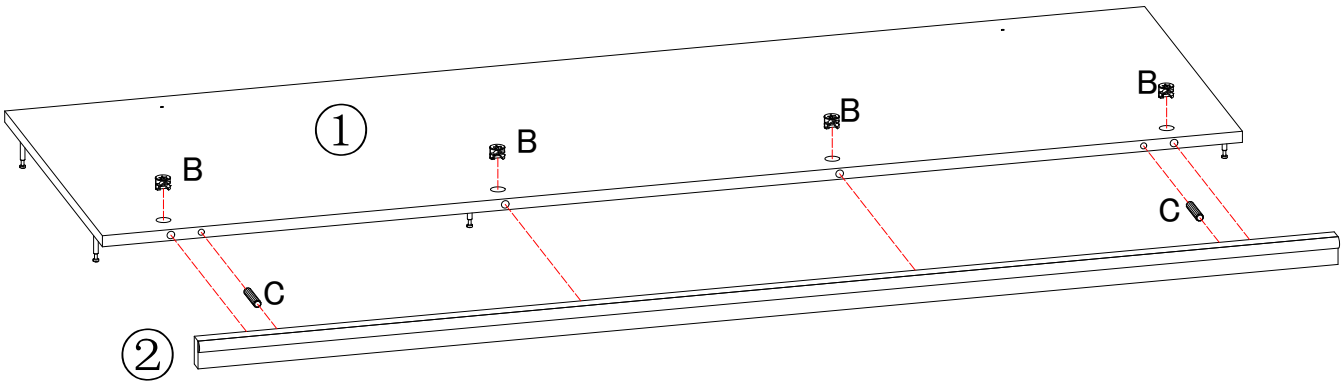


| | |
|---|---|
| 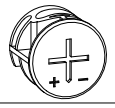 | 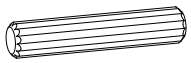 |
| B x4pcs | C x 2pcs |

# 22.

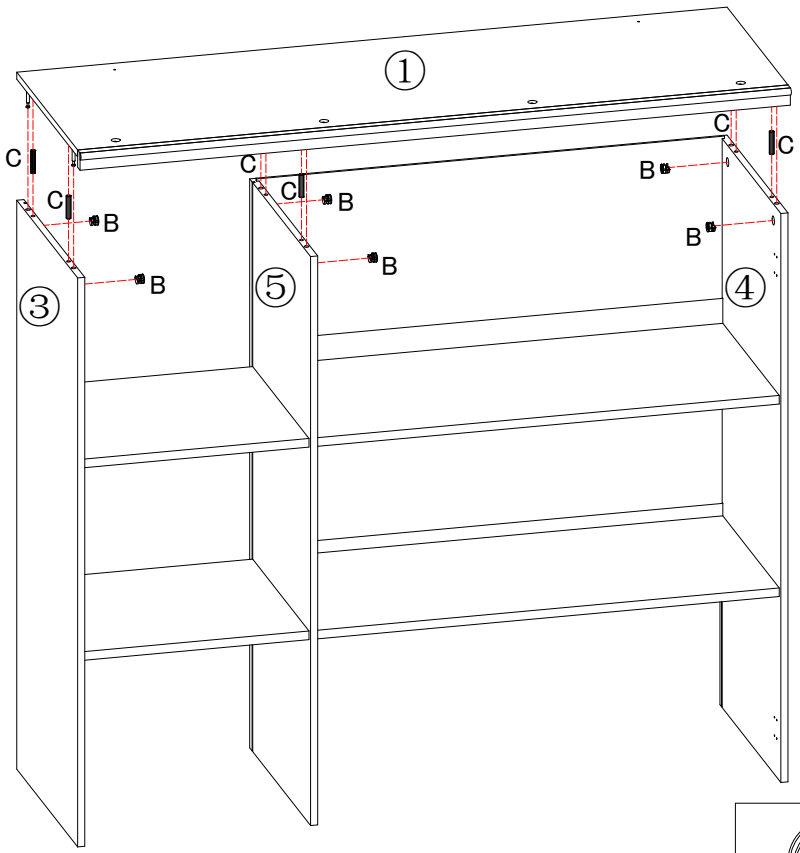


| | |
|---|---|
|  | 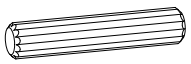 |
| B x6pcs | C x 6pcs |

# 23.

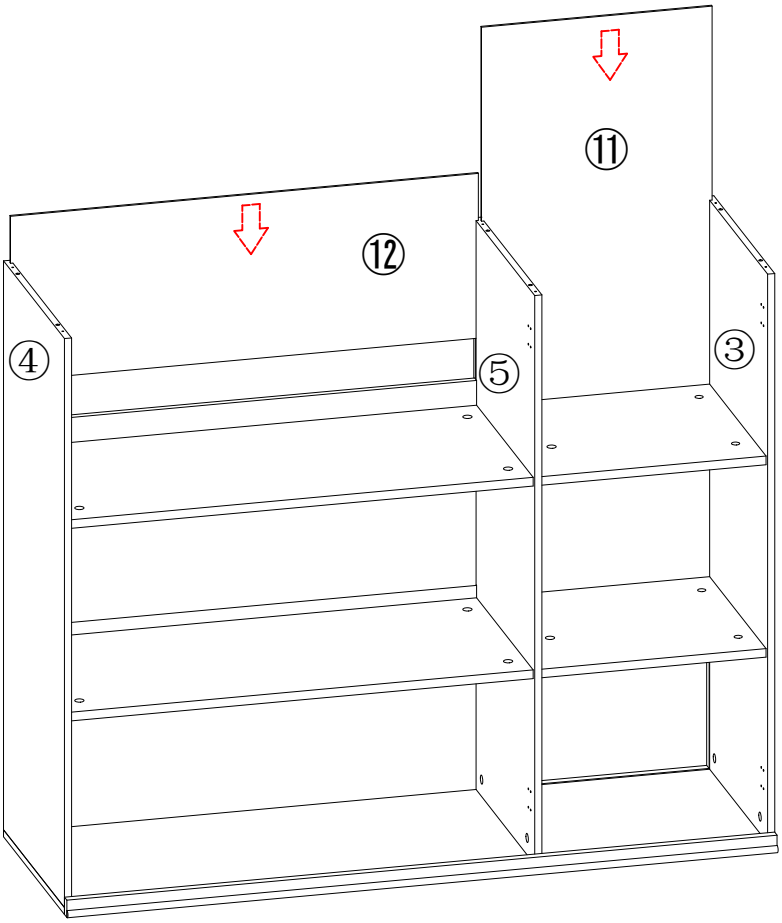


# 24.

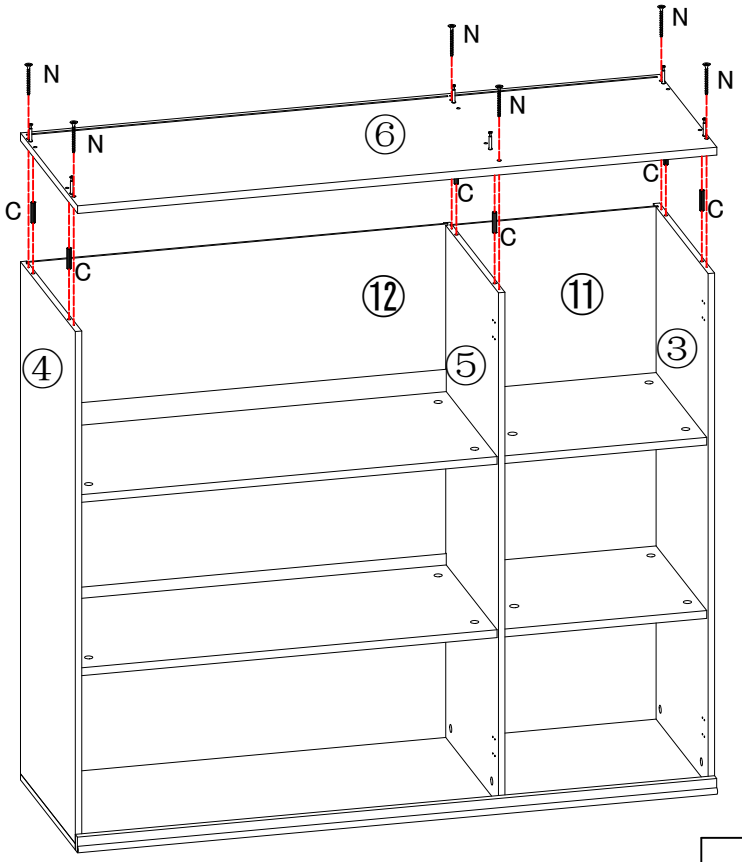


| | |
|---|---|
|  M4x45mm |  |
| N x6pcs | C x 6pcs |

# 25.

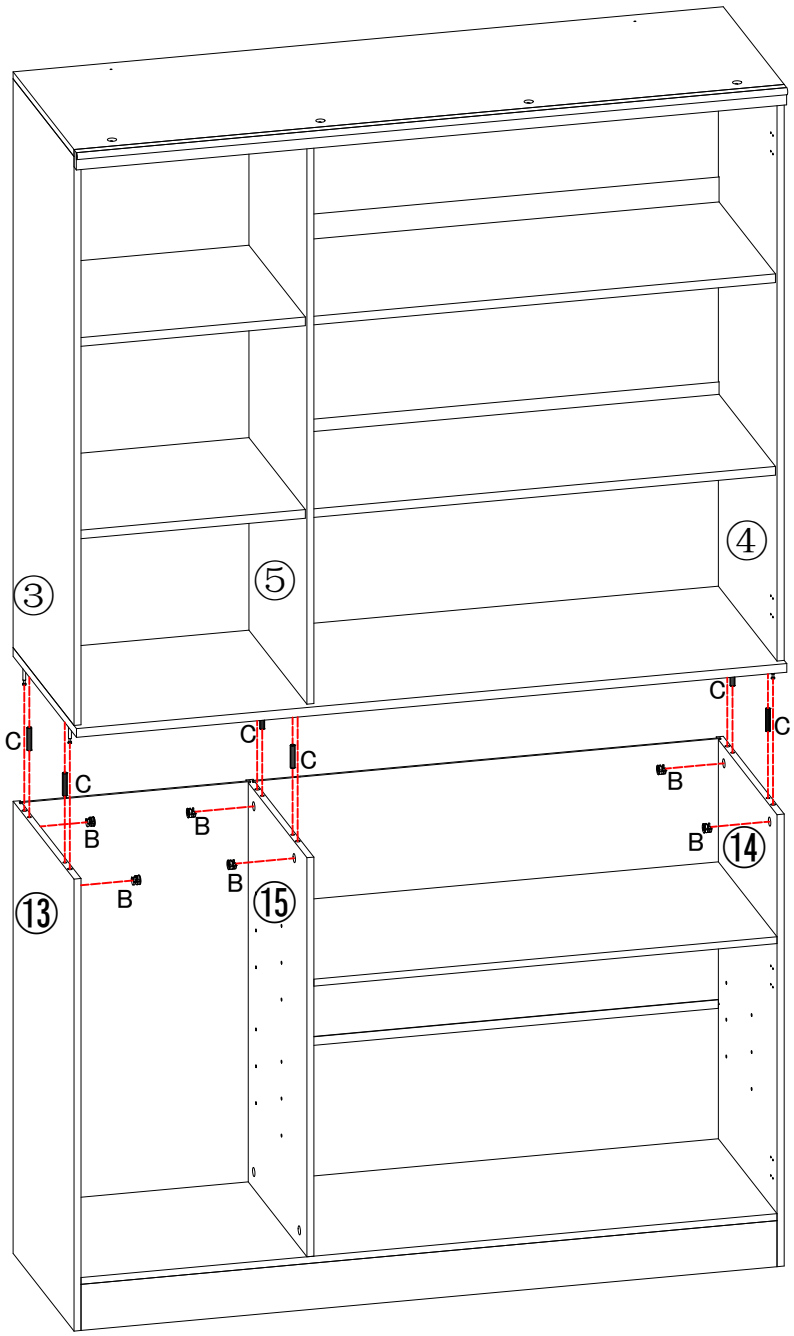


| | |
|---|---|
|  |  |
| B x6pcs | C x 6pcs |

# 26.

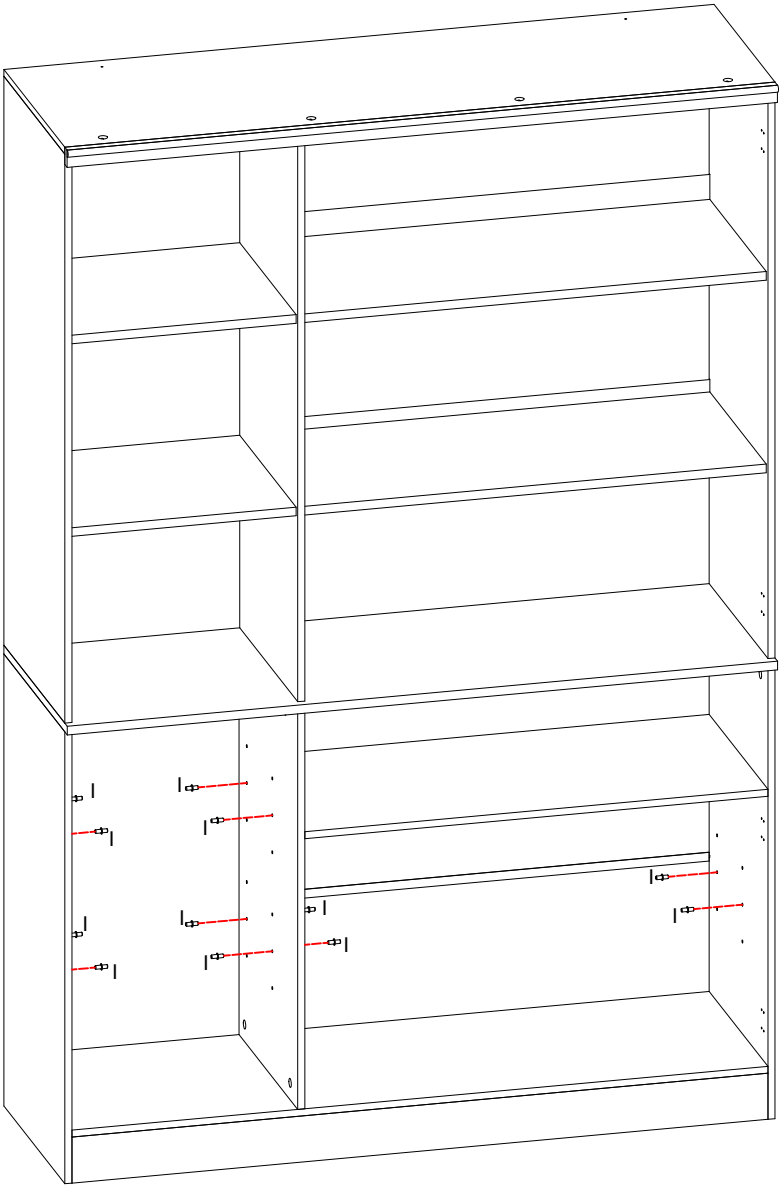

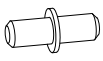

I x12pcs

# 27.

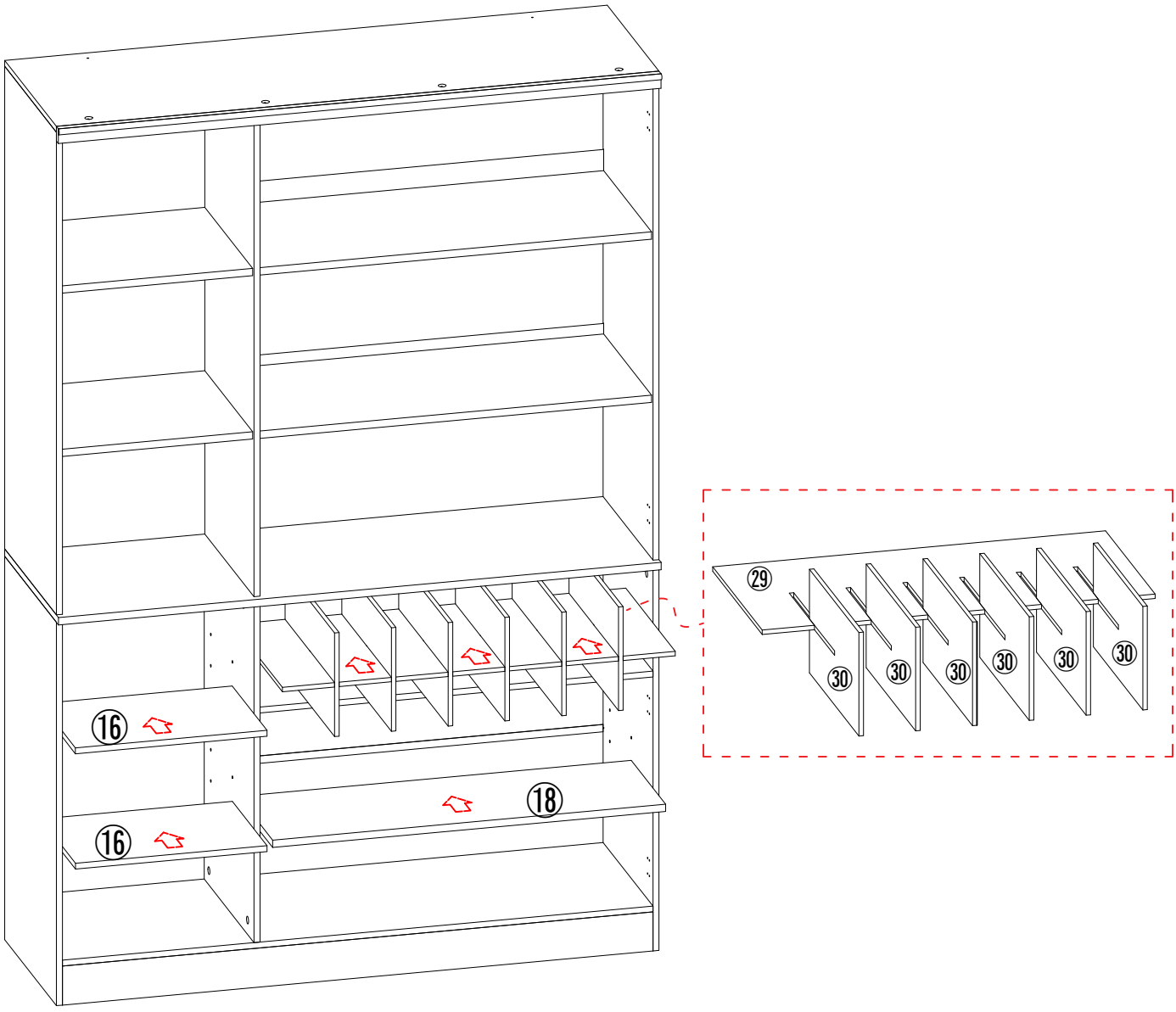

# 28.

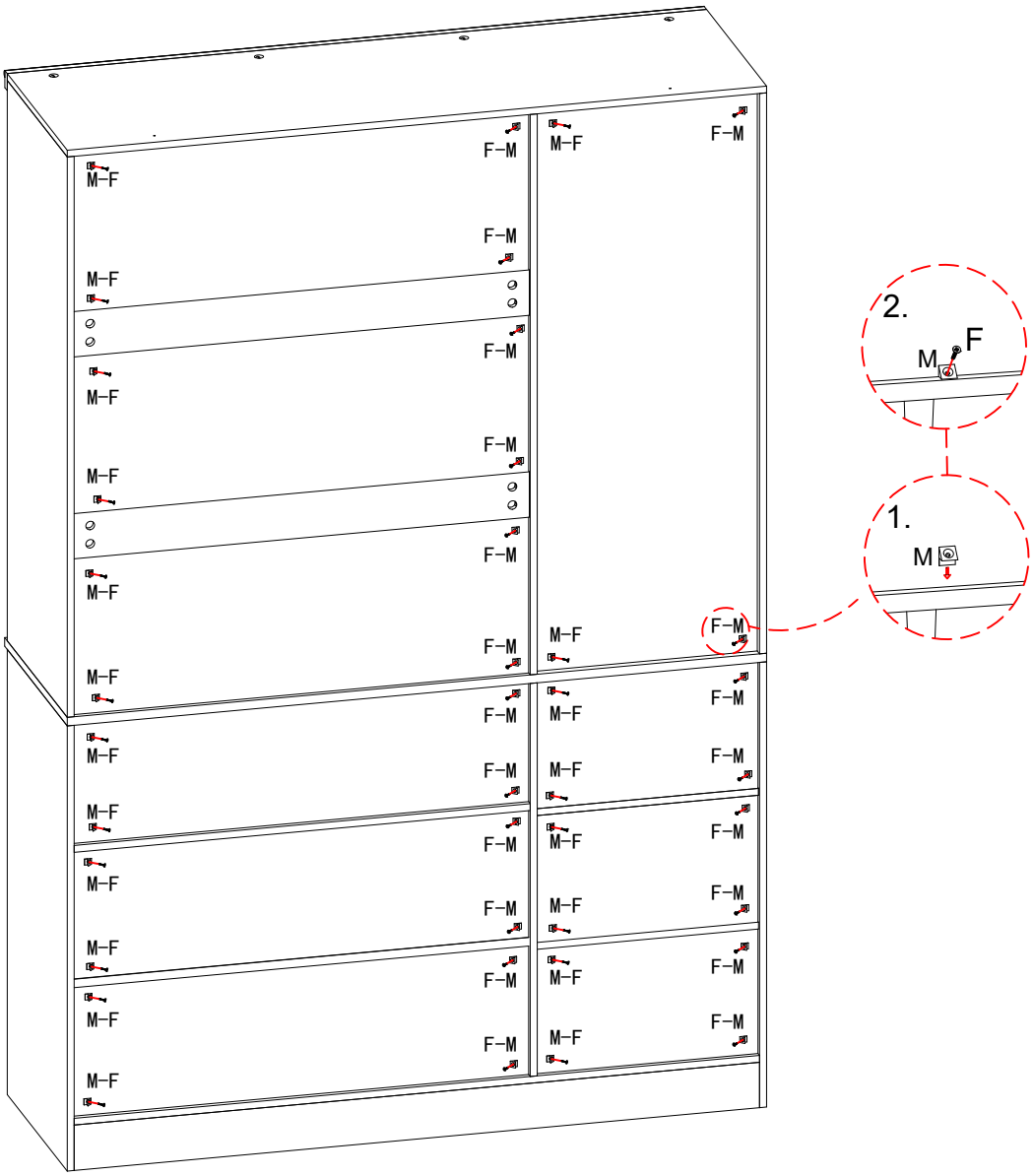


| | |
|---|---|
| | M3x16mm |
| M x40pcs | F x40pcs |

# 29.

| | |
|---|---|
|  |  M4x35mm |
| P x 2pcs | Q x 2pcs |
|  M4x14mm |  |
| L x 2pcs | R x 2pcs |

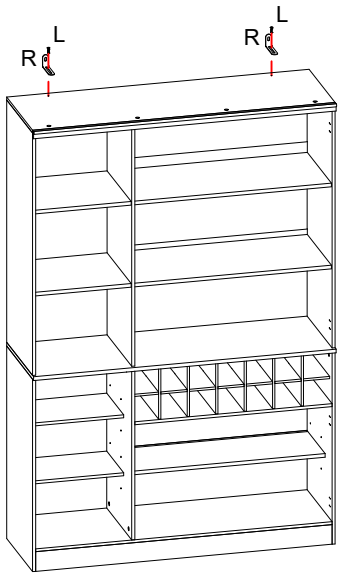


# 30.

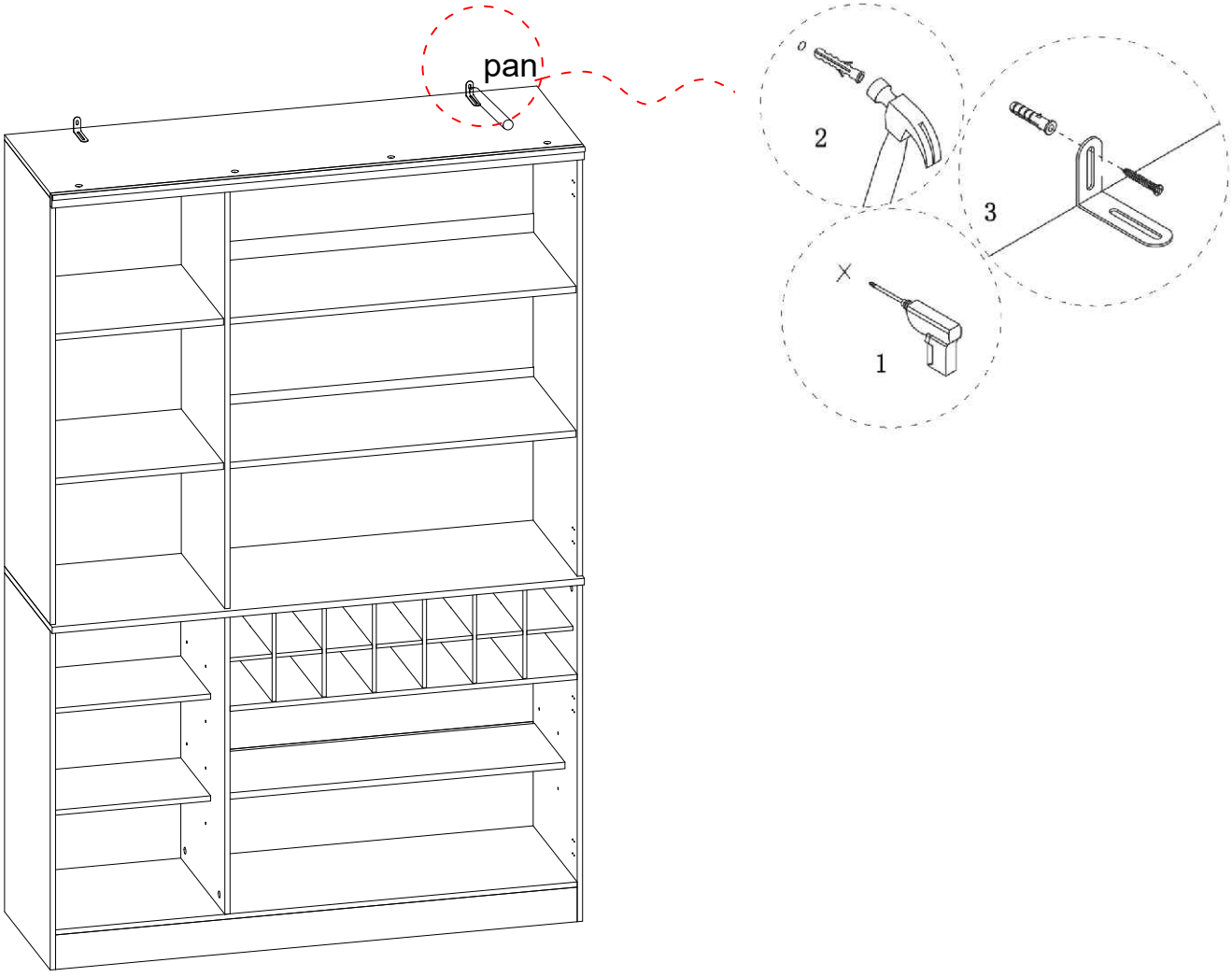


**ATTENTION:** For safety and stability, we suggest securing theanti tip accessories to the wall to prevent tipping, injury, and property damage.

# 31.

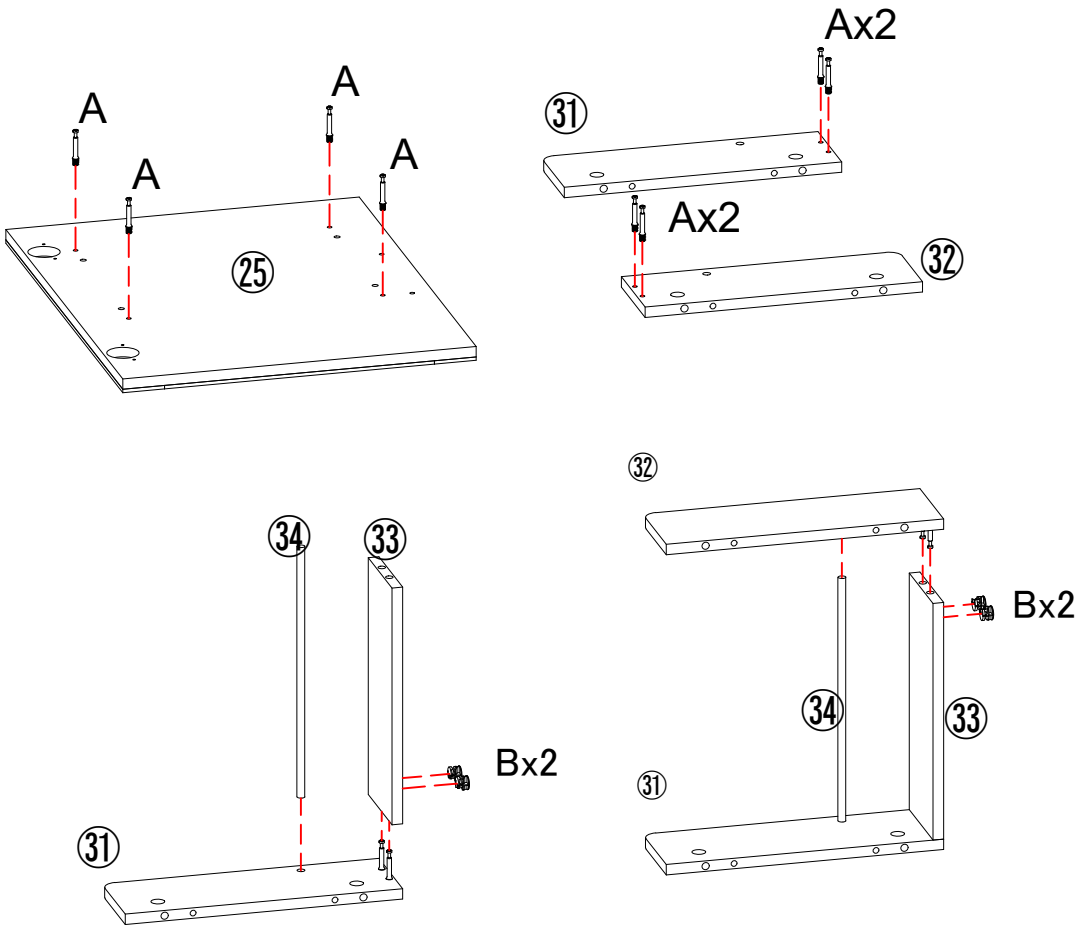


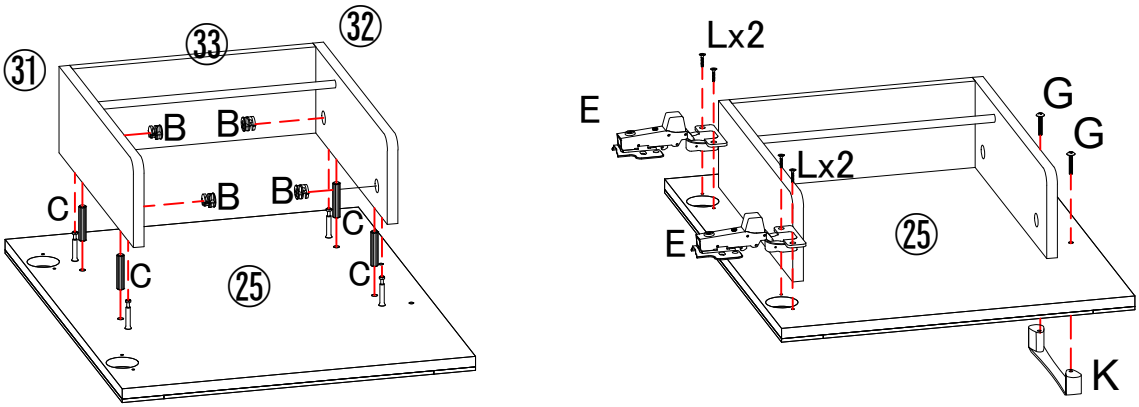


| | | | |
|---|---|---|---|
| | 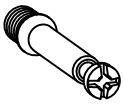 | 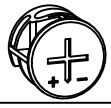 |  |
| | A x8pcs | B x8pcs | C x 4pcs |
|  M4x14mm |  | 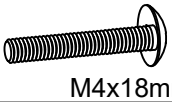 M4x18mm |  |
| L x 4pcs | K x1pc | G x2pcs | E x2pcs |

# 32.

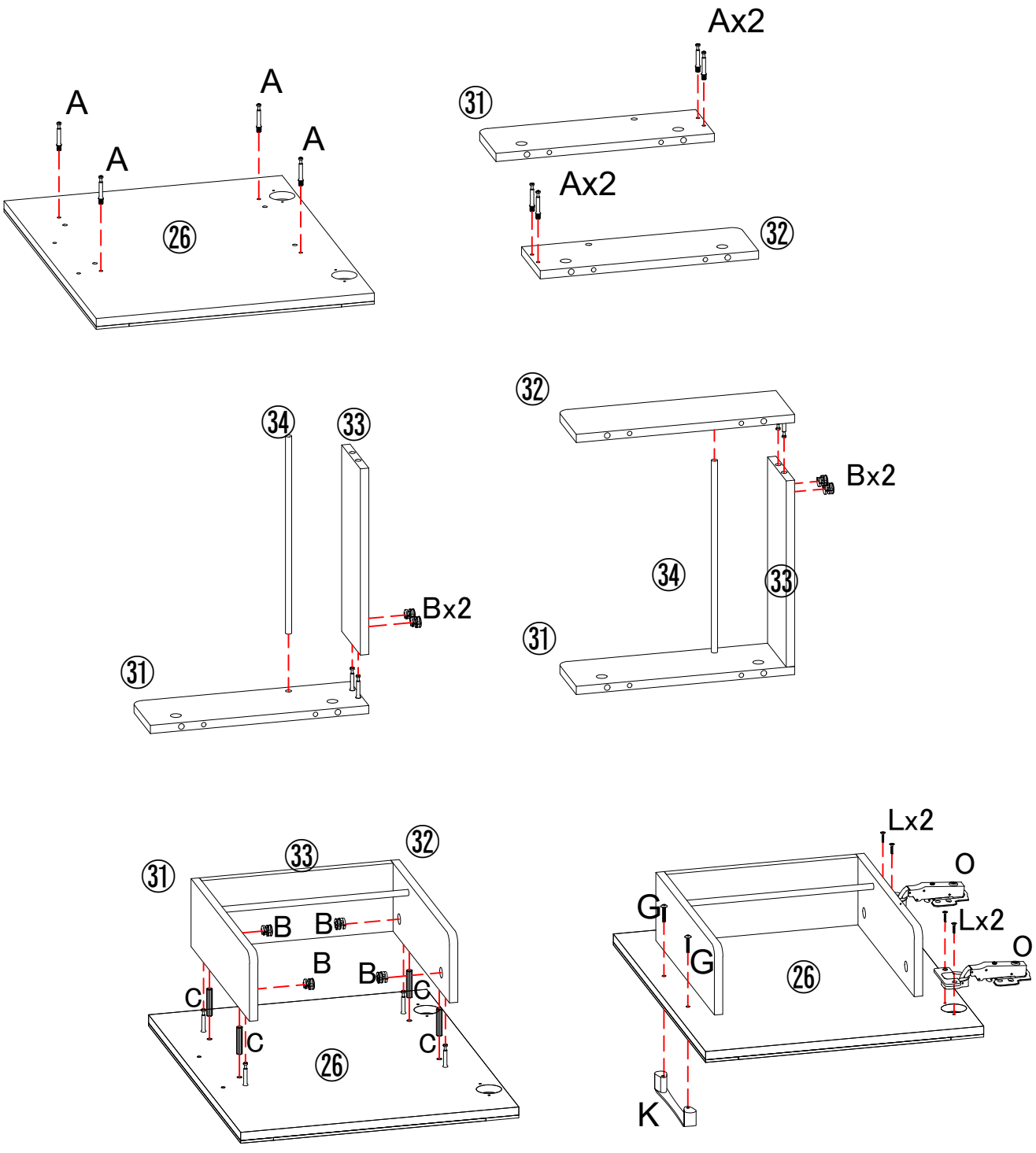


| | | |
|---|---|---|
| 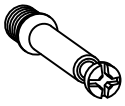 | 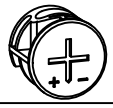 |  |
| A x8pcs | B x8pcs | C x 4pcs |

| | | | |
|---|---|---|---|
|  M4x14mm |  | 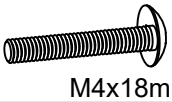 M4x18mm |  |
| L x 4pcs | K x1pc | G x2pcs | O x2pcs |

# 33.

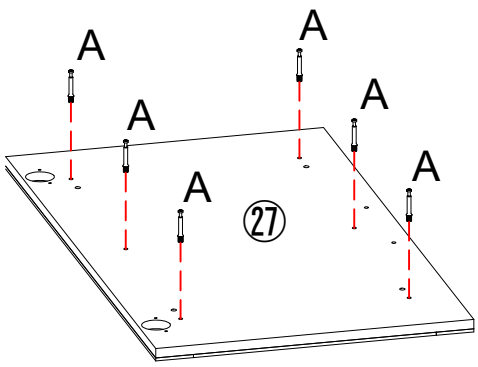


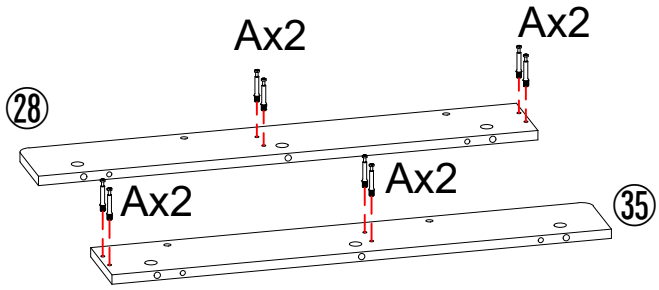


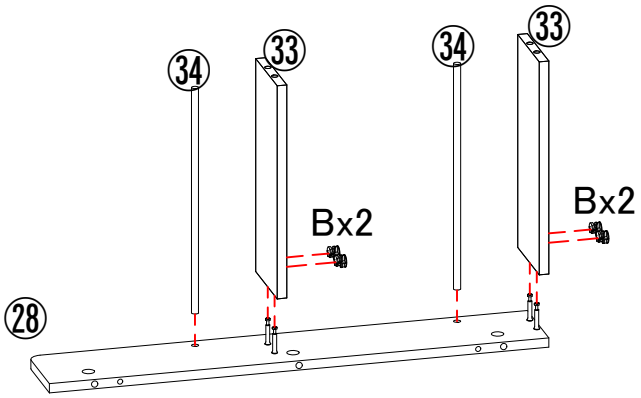


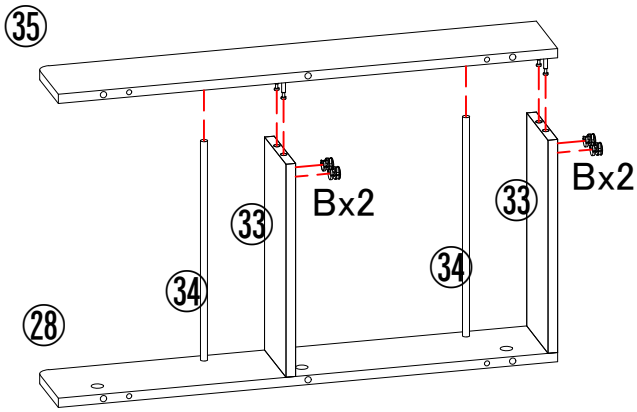


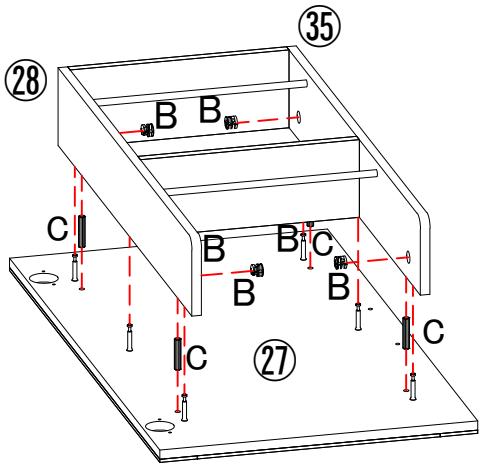


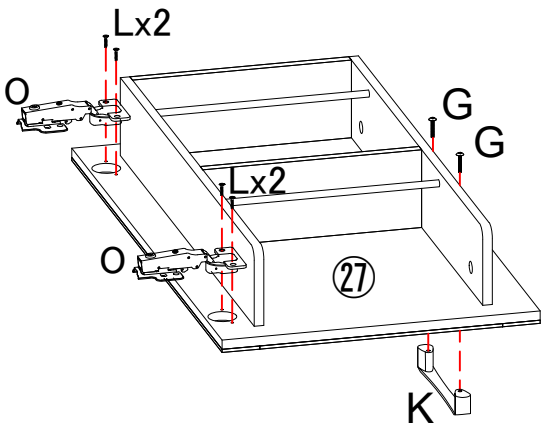


| | | |
|---|---|---|
| 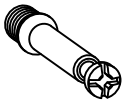 |  |  |
| A x14pcs | B x14pcs | C x 4pcs |

| | | | |
|---|---|---|---|
|  M4x14mm |  | 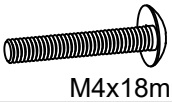 M4x18mm |  |
| L x 4pcs | K x1pc | G x2pcs | O x2pcs |

# 34.

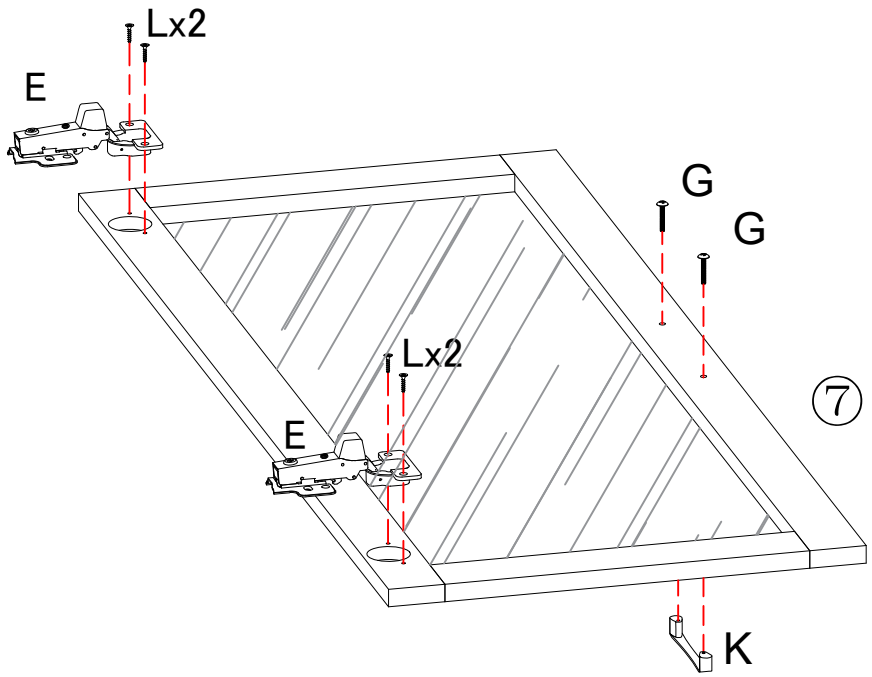


| | | | |
|---|---|---|---|
|  | 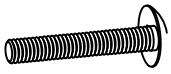 M4x18mm |  M4x14mm |  |
| K x1pcs | G x2pcs | L x4pcs | E x2pcs |

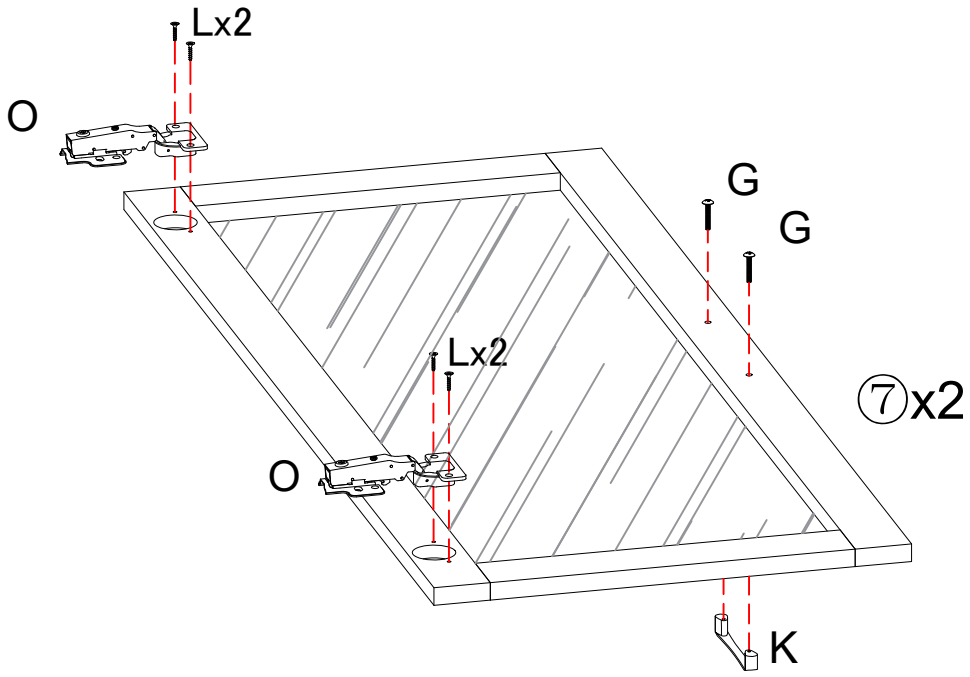


| | | | |
|---|---|---|---|
|  | 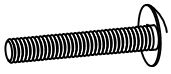 M4x18mm |  M4x14mm | 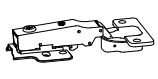 |
| K x2pcs | G x4pcs | L x8pcs | O x4pcs |

# 35.

When the hinges are installed, you can refer to the pictures to adjust crevice of the doors till it's perfect:

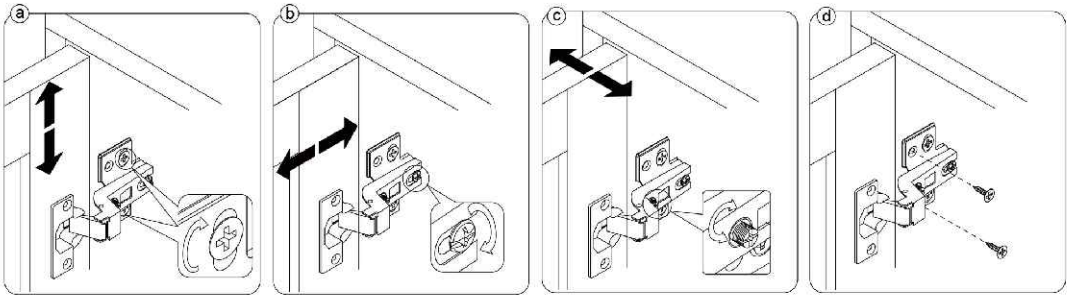


1. To adjust the doors up and down, please refer to step (a)
2. To adjust the distance between the doors and side panels, please refer to step(b)
3. To adjust the gap between two doors, please refer to step (c)
4. After the adjustment finished, please tight the screws, refer to step (d)

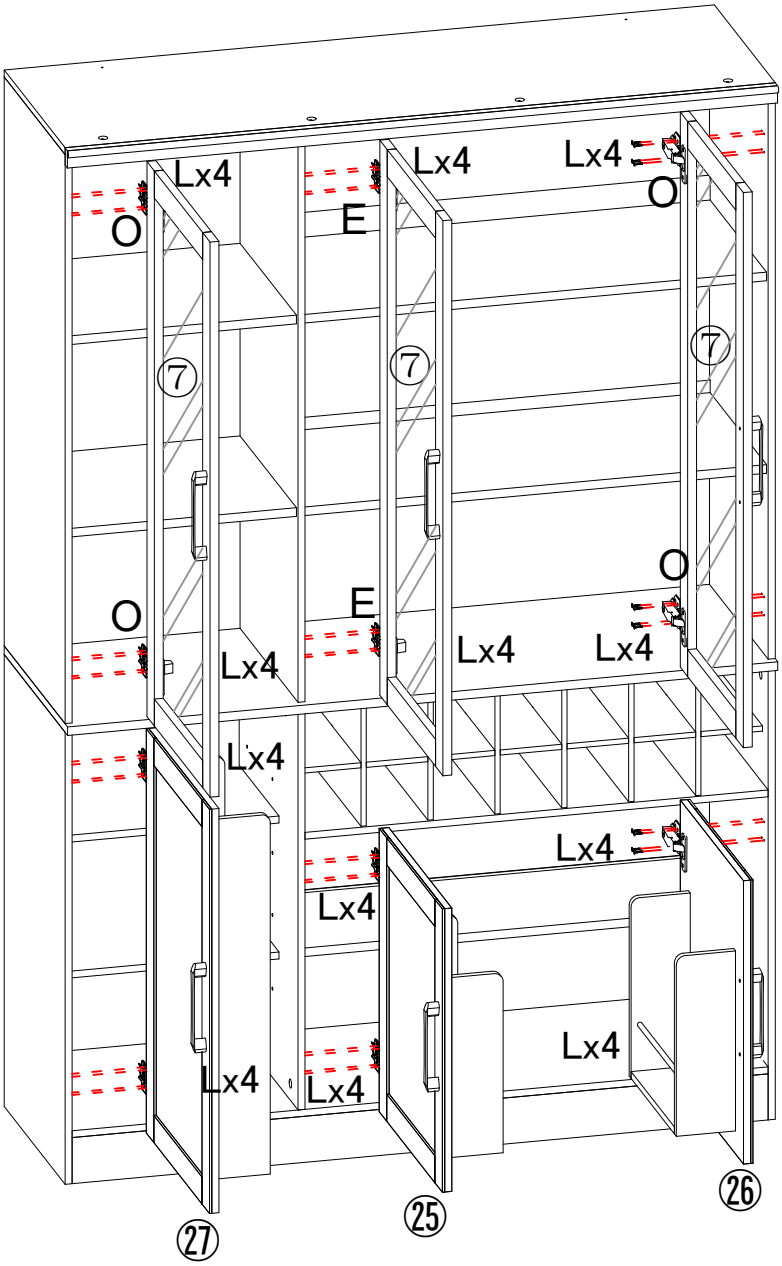


M4x14mm

L x 48pcs

# 36.



H x 24pcs

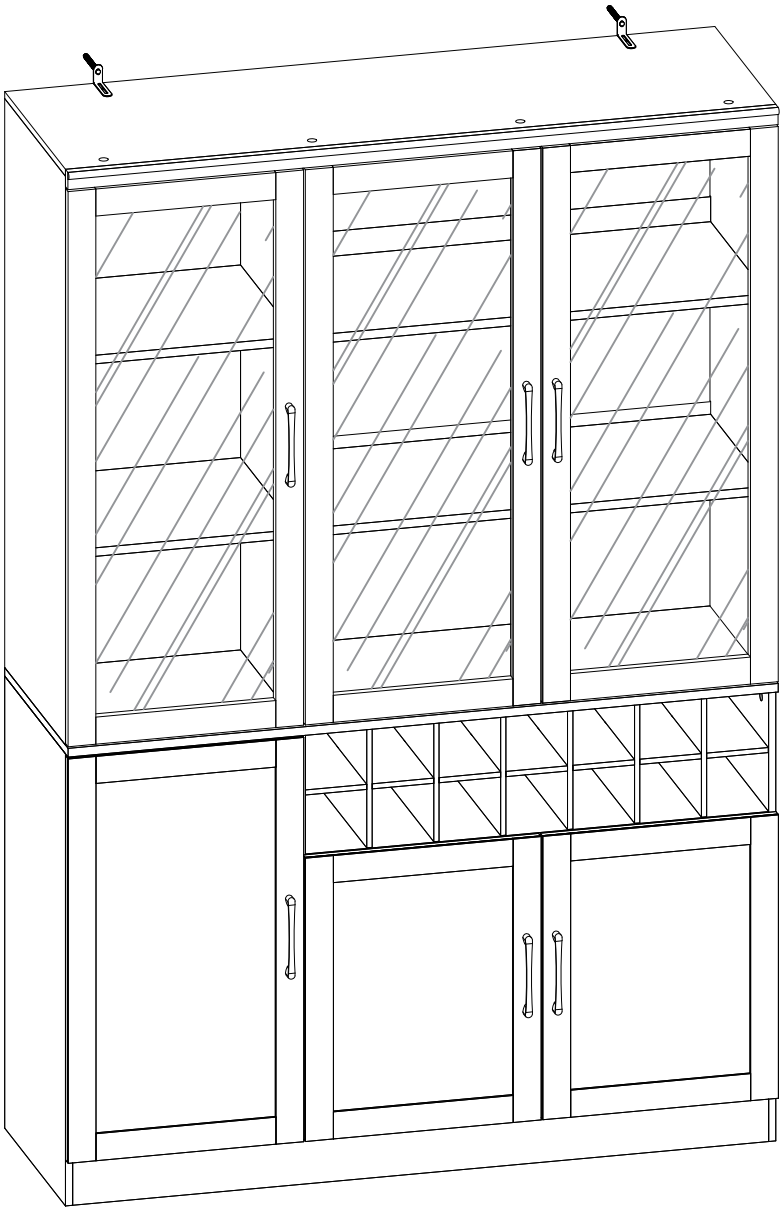

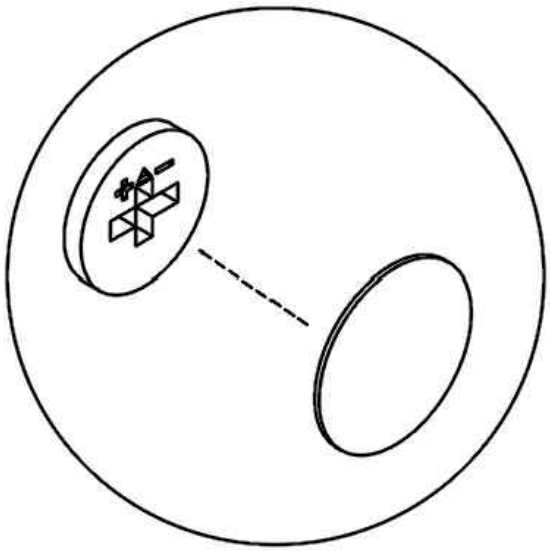

In order to make the product more beautiful,please paste hardware H on the exposed holes.