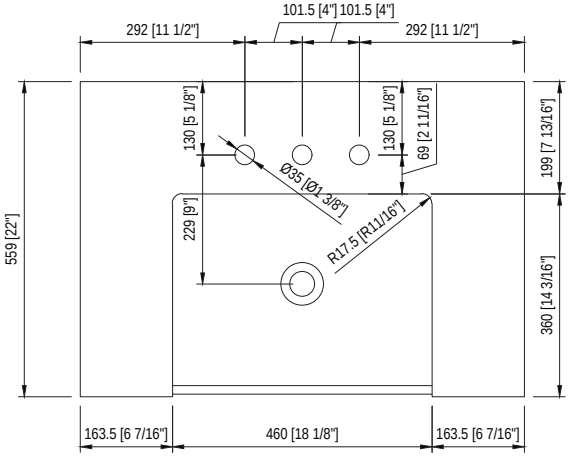

TOP VIEW

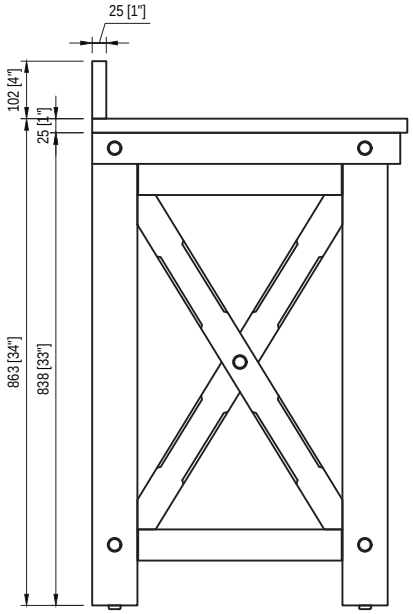

SIDE VIEW

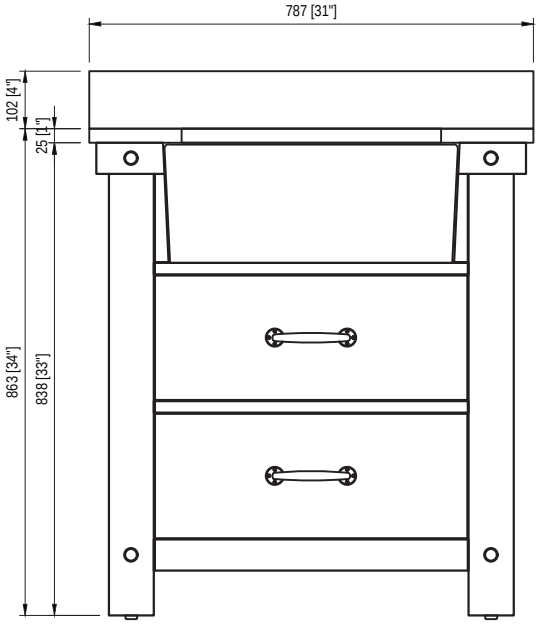

FRONT VIEW

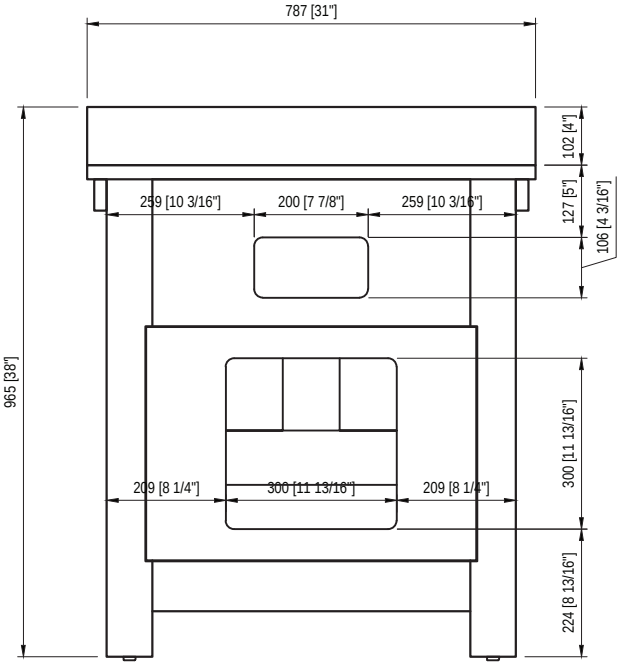

BACK VIEW

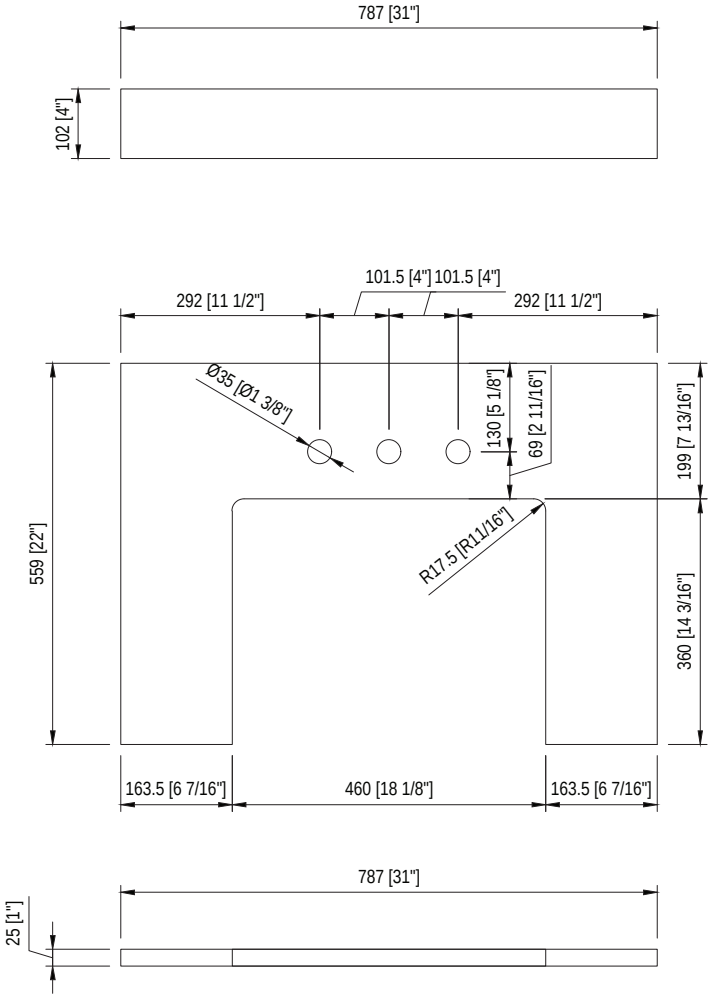
787 [31"]
102 [4"]
101.5 [4"]
101.5 [4"]
292 [11 1/2"]
292 [11 1/2"]
Ø35 [Ø1 3/8"]
130 [5 1/8"]
69 [2 11/16"]
199 [7 13/16"]
559 [22"]
R17.5 [R11/16"]
360 [14 3/16"]
163.5 [6 7/16"]
460 [18 1/8"]
163.5 [6 7/16"]
787 [31"]
25 [1"]

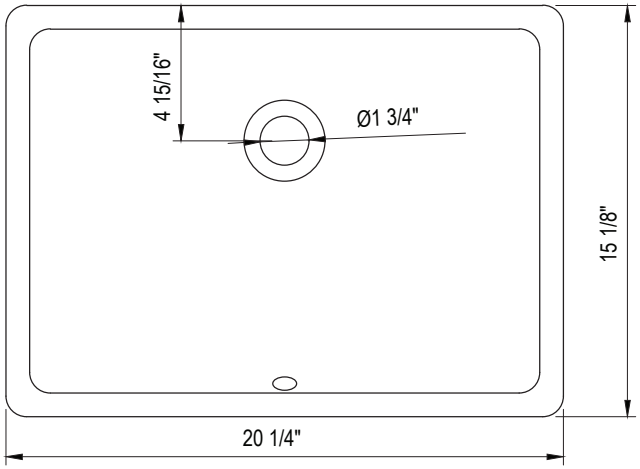
4 15/16"
Ø1 3/4"
15 1/8"
20 1/4"

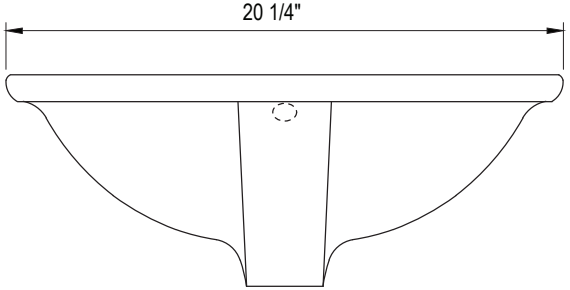
20 1/4"

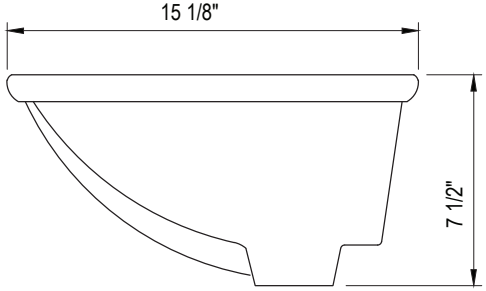
15 1/8"
7 1/2"