626-679-3588
service@getprohome.com
www.getprohome.com
162 Atlantic St, Pomona, CA 91768

GETPRO®

SCAN ME
PRODUCT INSTRUCTION VIDEO

SIZE DETAILS

PIVOT SHOWER DOOR



SIZE DETAILS

SHOWER DOOR

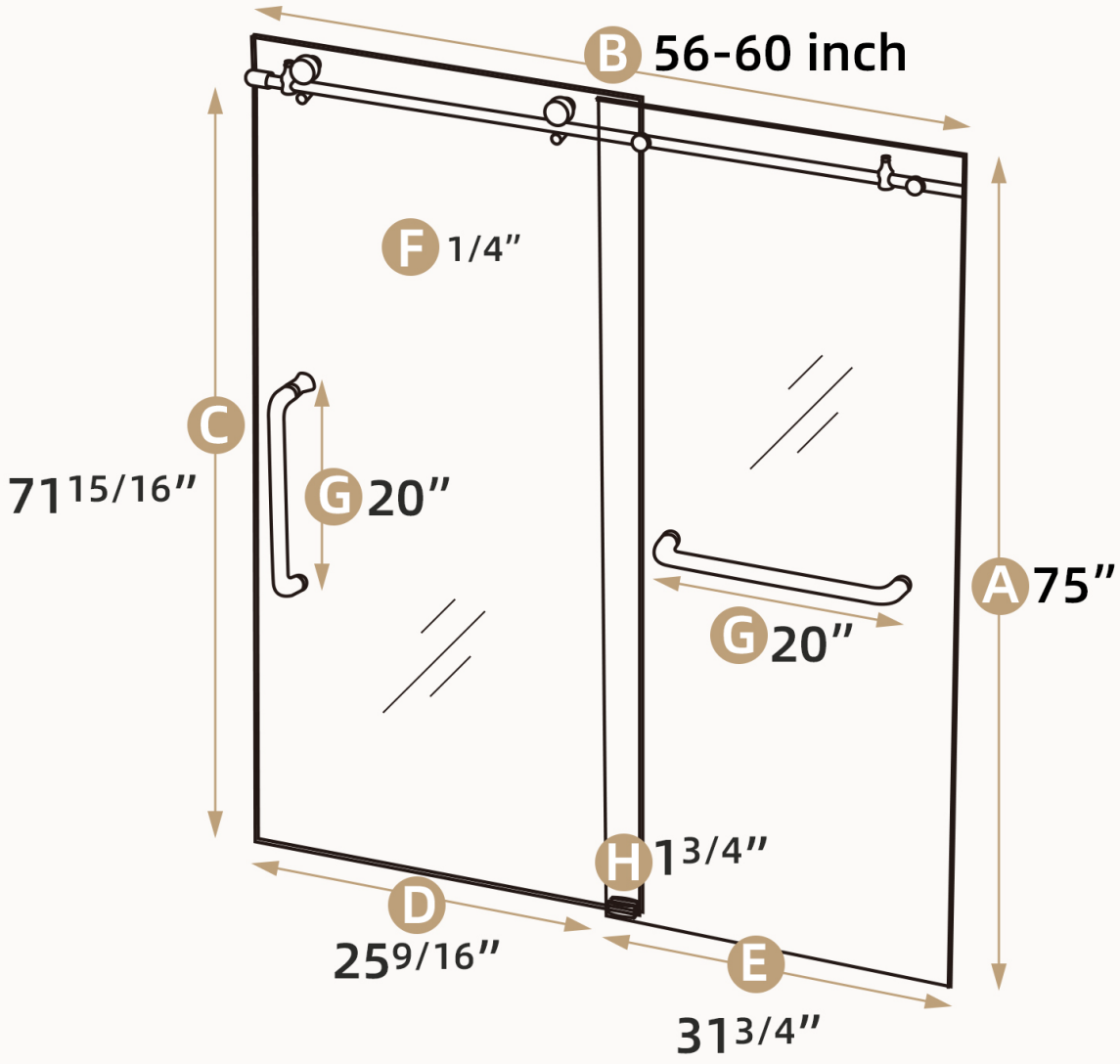

SHOWER DOORS INFORMATION

56-60 in Wx75 in H

- A Model Height
- B Model Width
- C Walk-in Height
- D Walk-in Width
- E Glass Door Width
- F Glass Thickness
- G Handle Length
- H Min.Base Width