KS3120,1,2,3,5,6,7,8AX
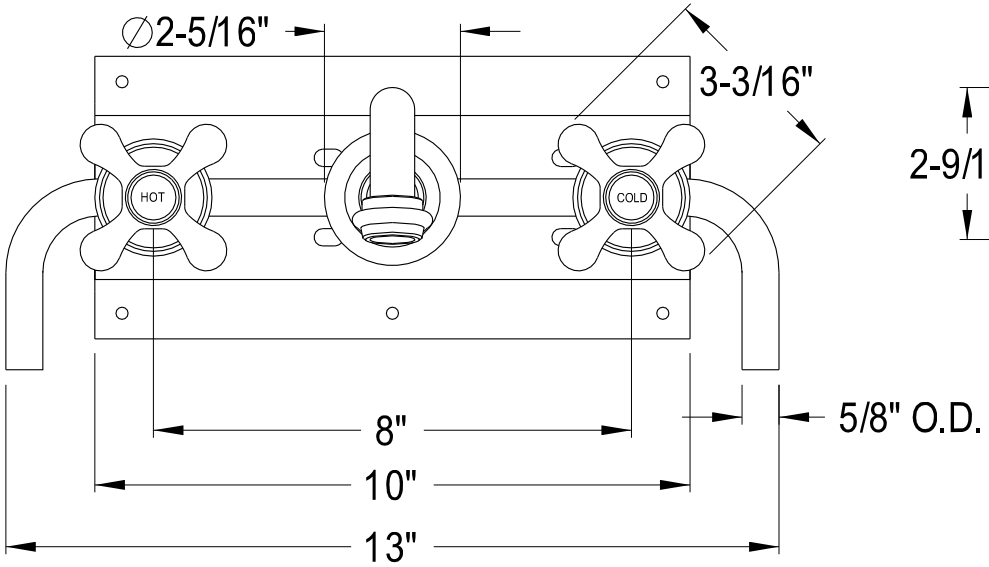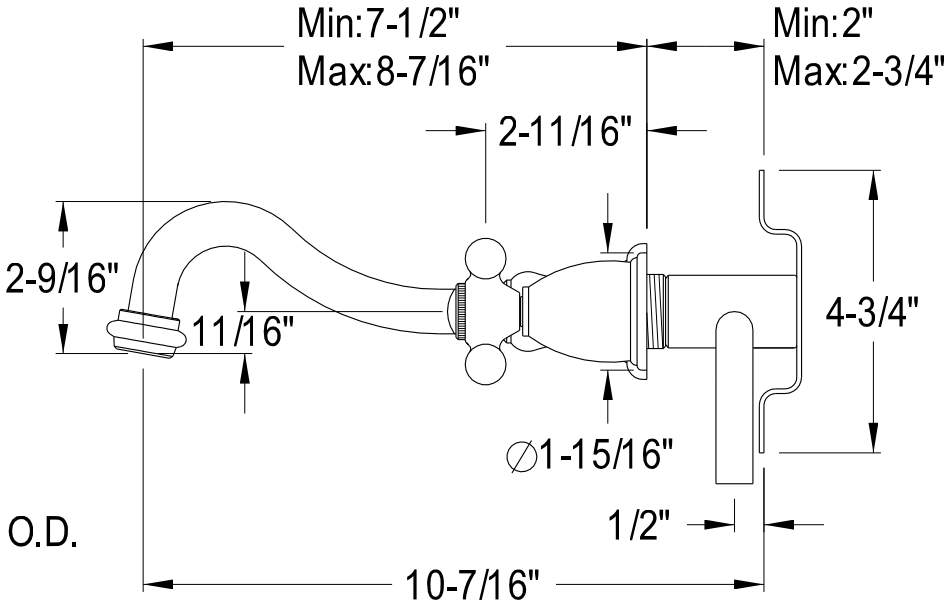
Twin Handles Wall Mount Bathroom Faucet