Assembly Instructions

Caution : You must read these Assembly Instructions before you proceed

Care & Maintenance



- Not for commercial use. For residential use only.



- Do not put hot items directly on furniture surface.



- Do not clean furniture with harsh cleansers or polish.



- To obtain the longest lifespan of your outdoor products,minimizing exposure to direct sunlight is recommended.



- Children should not climb or jump on the furniture.



- Do not write on furniture without a padded barrier to protect the surface.



- To obtain the longest lifespan of your outdoor products, avoid extended and lengthy exposure to rain, snow,and direct sunshine.
  Whenever possible cover the product and /or place under patio or awnings.



- Stains may be removed with mild soap solution and damp cloth.



- Dust and pick-up spills using a clean, non-colored, lint-free cloth.

Please look into the Seat Panel for hardware packs.

Dining Chair

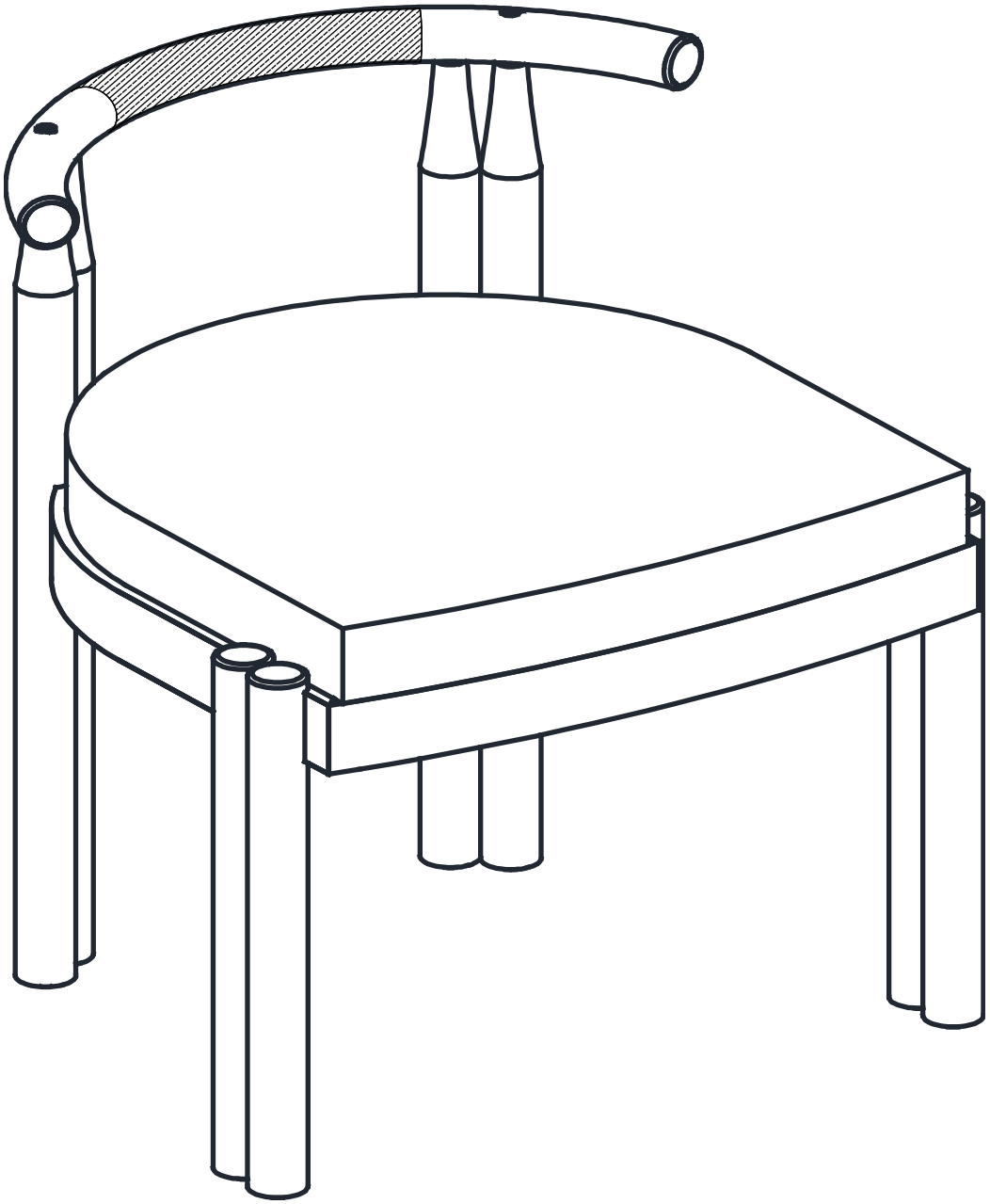

CAUTION: This Dining chair is NOT a TOY.
Keep your child / children at bay during the assembly process.
Whenever lifting or moving the **Dining chair** and to prevent any damage to it, two adults may be needed to execute these actions.

Part List

Label	Picture	Description	QTY
A		Back Leg Panel	2
B		Front Leg Panel	2
C	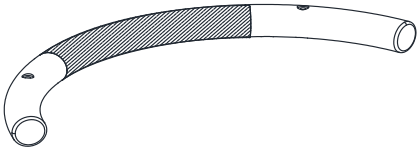	Backrest Panel	1
D	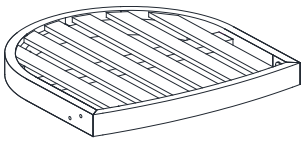	Seat Panel	1
E	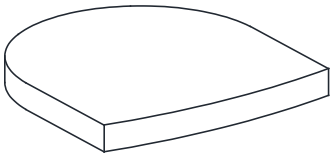	Seat Cushion	1

Hardware

Label	Picture	Description	QTY
①		Screws (M6x80mm)	3
②		Bolt (M8x35mm)	5
③		Bolt (M8x50mm)	5
④		Allen Wrench	2

Assembly Preparation

Before Beginning Assembly:

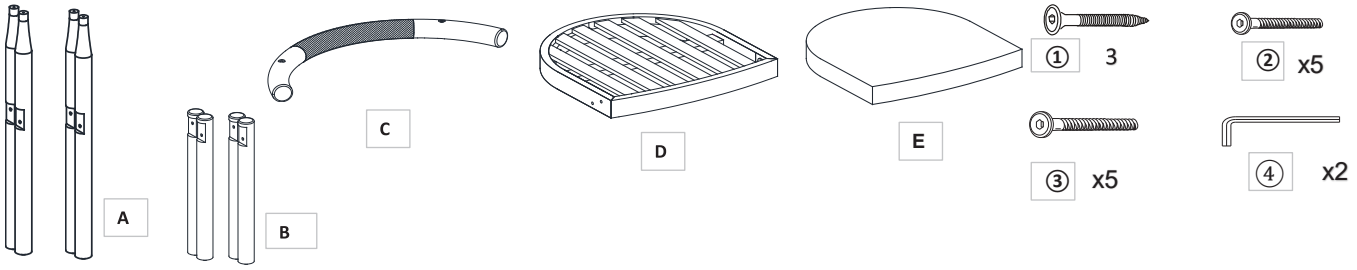

- Read instructions, cover to cover-
- Have 2 adults on hand for assembly-
- Do not assemble on flooring or carpet-
- Assemble on a clean non-marring surface (packing foam)-
- Save all packaging until finished-

Assembly Steps

Overview

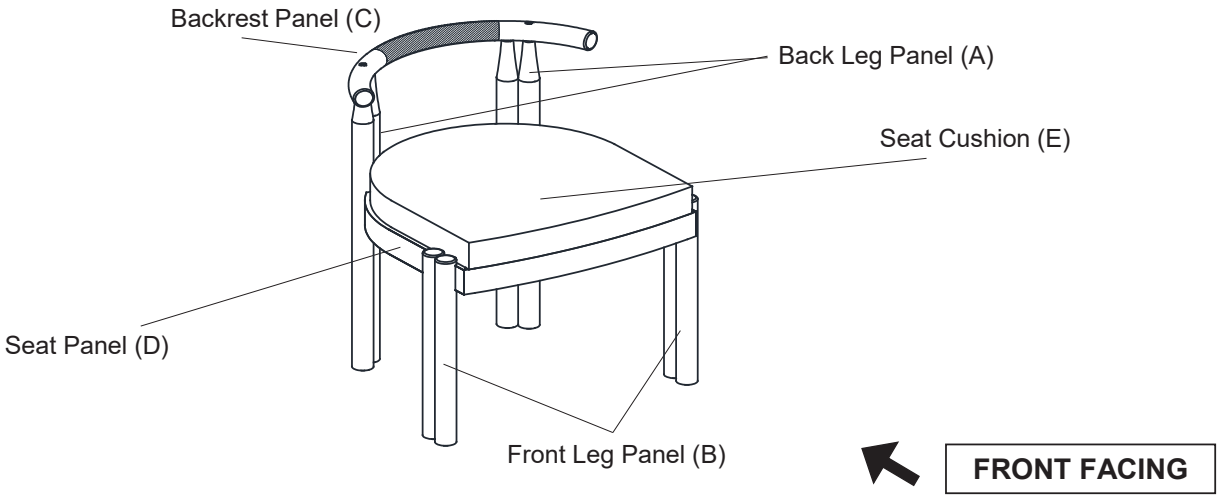

This Dining Chair has multiple parts and may require up to 30 minutes to assemble. To give you an overview of the **Dining chair parts,** the above picture is provided to help you put the various parts into perspective. Please read through the instructions below to familiarise yourself with the parts and steps before assembly.

Step 1

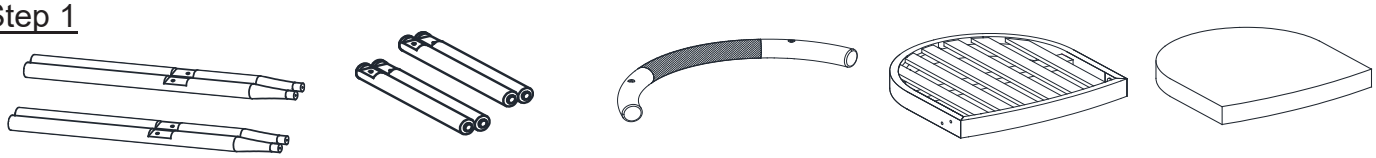

Unpack and place all parts on a clean, non-marring surface.

Step 2

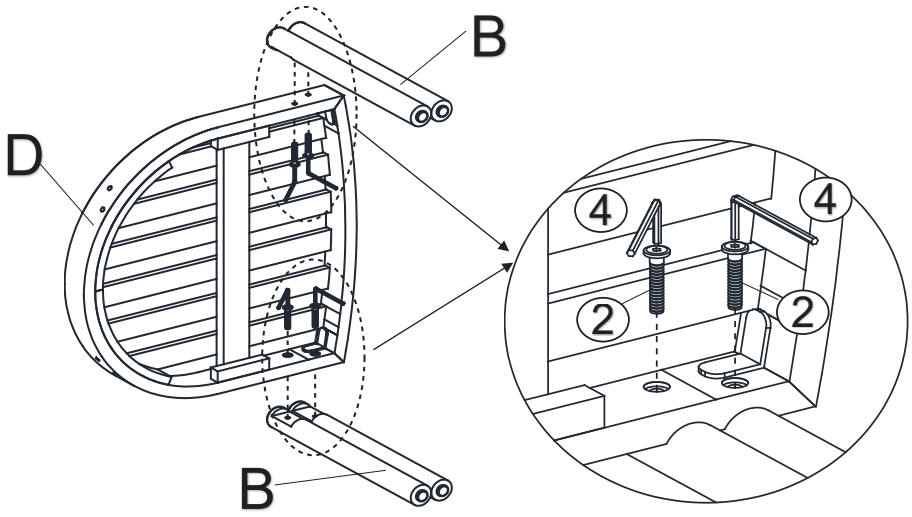

Place the Seat Panel (D) lie as shown in the picture above onto a clean, soft surface to avoid any scratches or damage to the product. With assistance from your adult partner(s):
Attach the Front Leg Panel (B) to Seat Panel (D), by using Bolt (②) and the Allen Wrench (④) as shown above.
DO NOT fully tighten the Bolts at this time.

Step 3

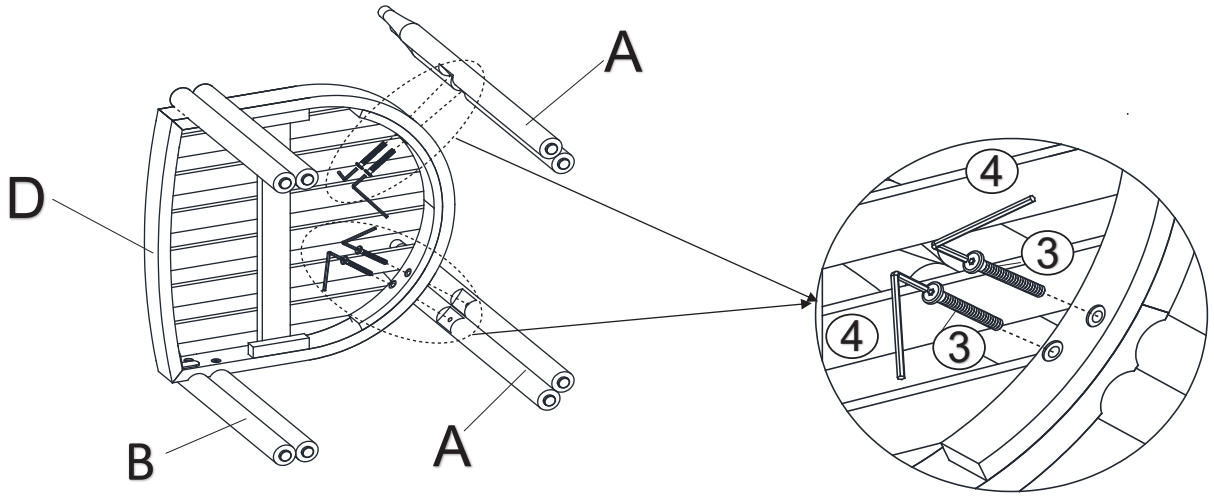

Turn the frame of step 2 lie as shown in the picture above onto a clean, soft surface to avoid any scratches or damage to the product. With assistance from your adult partner(s):
Attach the Back Leg Panel (A) to Seat Panel (D) , by using Bolts (③) and the Allen Wrench (④) as shown above.
DO NOT fully tighten the Bolts at this time.

Step 4

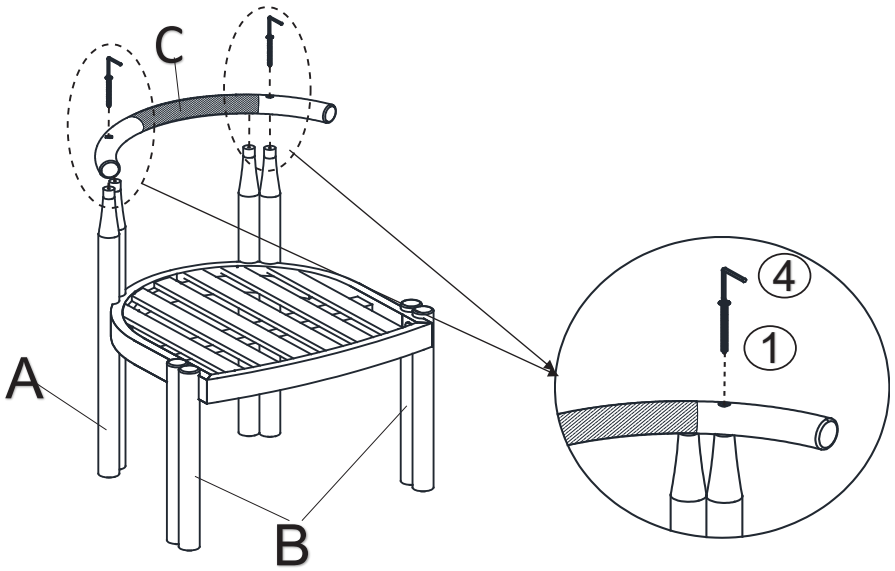

Turn the frame of step 3 right side up as shown in the picture above onto a clean, soft surface to avoid any scratches or damage to the product. With assistance from your adult partner(s):
Attach the Backrest Panel (C) to Leg Panel (A), by using Screws (①) and the Allen Wrench (④) as shown above.
DO NOT fully tighten the Screws at this time.

Step 5

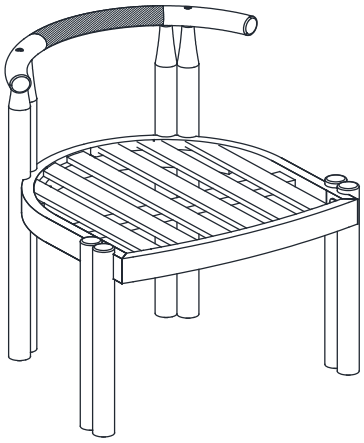

Turn the Dining Chair right side up.
Inspect the Dining Chair and make sure all parts are adequately connected.
In a sequential manner, tighten all Screws and Bolts at all joints.
With assistance from your adult partner, adjust the Levelers to the desired height to avoid wobbles.

CAUTION: When tightening these screws and bolts, tighten sequentially.
DO NOT tighten any screws or bolts fully and then move towards the next one. This could cause the frame to warp.
WARNING!! IF THE DINING CHAIR IS NOT STABLE , IT COULD LEAD TO DAMAGING THE PRODUCT.

Step 6

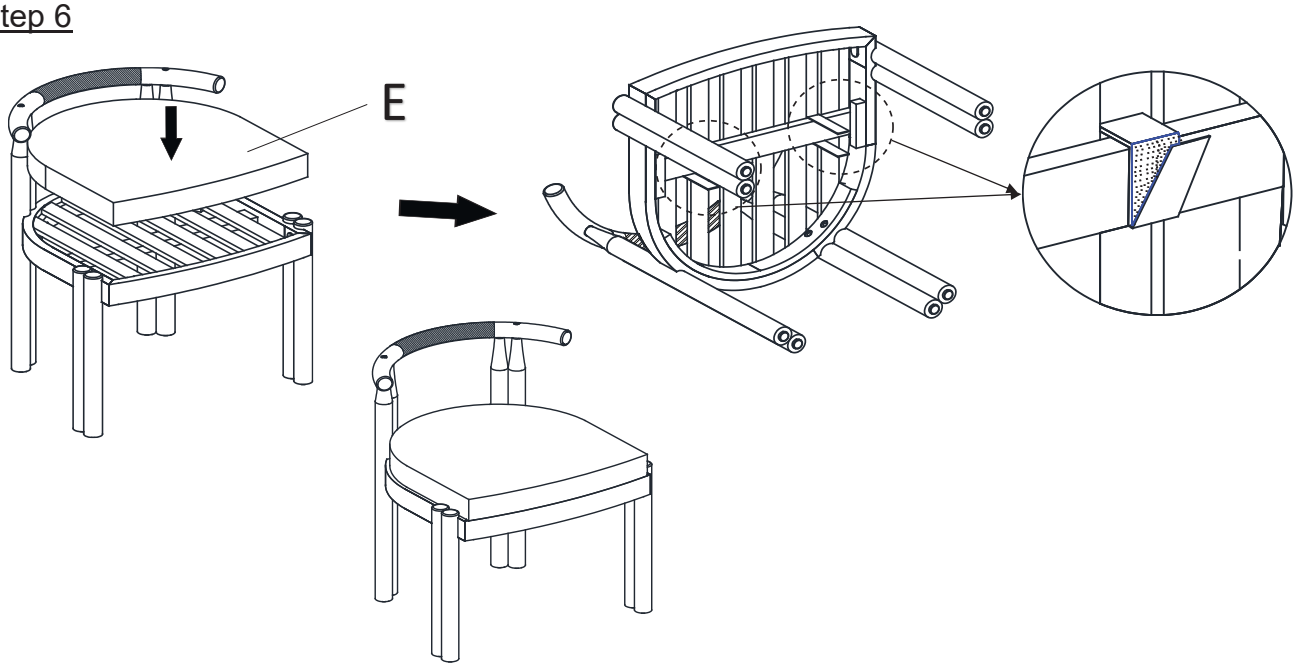

Place Seat Cushion (E) onto the Dining chair.
Then affix the "magic tape straps" around the Dining chair as shown above.
Your **Dining chair** is ready to be used.
This **- Dining chair** can only be used on a flat, level surface.

Questions & Answers about Proposition 65

• What is Proposition 65?

Proposition 65 requires businesses to provide warnings to Californians about significant exposures to chemicals that cause cancer, birth defects or other reproductive harm. These chemicals can be in the products that Californians purchase, in their homes or workplaces, or that are released into the environment. By requiring that this information be provided, Proposition 65 enables Californians to make informed decisions about their exposures to these chemicals.

Proposition 65 also prohibits California businesses from knowingly discharging significant amounts of listed chemicals into sources of drinking water.

Proposition 65 requires California to publish a list of chemicals known to cause cancer, birth defects or other reproductive harm. This list, which must be updated at least once a year, has grown to include approximately 900 chemicals since it was first published in 1987.

• What types of chemicals are on the Proposition 65 list?

The list contains a wide range of naturally occurring and synthetic chemicals that include additives or ingredients in pesticides, common household products, food, drugs, dyes, or solvents. Listed chemicals may also be used in manufacturing and construction, or they may be byproducts of chemical processes, such as motor vehicle exhaust.

• What does a warning mean?

If a warning is placed on a product label or posted or distributed at a workplace, a business, or in rental housing, the business issuing the warning is aware or believes that it is exposing individuals to one or more listed chemicals.

By law, a warning must be given for listed chemicals unless the exposure is low enough to pose no significant risk of cancer or is significantly below levels observed to cause birth defects or other reproductive harm.

• Where can I get more information on Proposition 65?

If you have specific questions on the administration or implementation of Proposition 65, you can contact OEHHA's Proposition 65 program at P65.Questions@oehha.ca.gov, or by phone at (916) 445-6900.

Assembly Instructions

CAUTION: You must read these Assembly Instructions before you proceed.

Care & Maintenance



- Not for commercial use. For residential use only.



- Do not put hot items directly on furniture surface.



- Do not clean furniture with harsh cleansers or polish.



- To obtain the longest lifespan of your outdoor products, minimizing exposure to direct sunlight is recommended.



- Children should not climb or jump on the furniture.



- Do not write on furniture without a padded barrier to protect the surface.



- To obtain the longest lifespan of your outdoor products, avoid extended and lengthy exposure to rain, snow, and direct sunshine. Whenever possible cover the product and /or place under patio or awnings.



- Stains may be removed with mild soap solution and damp cloth.



- Dust and pick-up spills using a clean, non-colored, lint-free cloth.

Please look under the Table Top for hardware pack.

Table

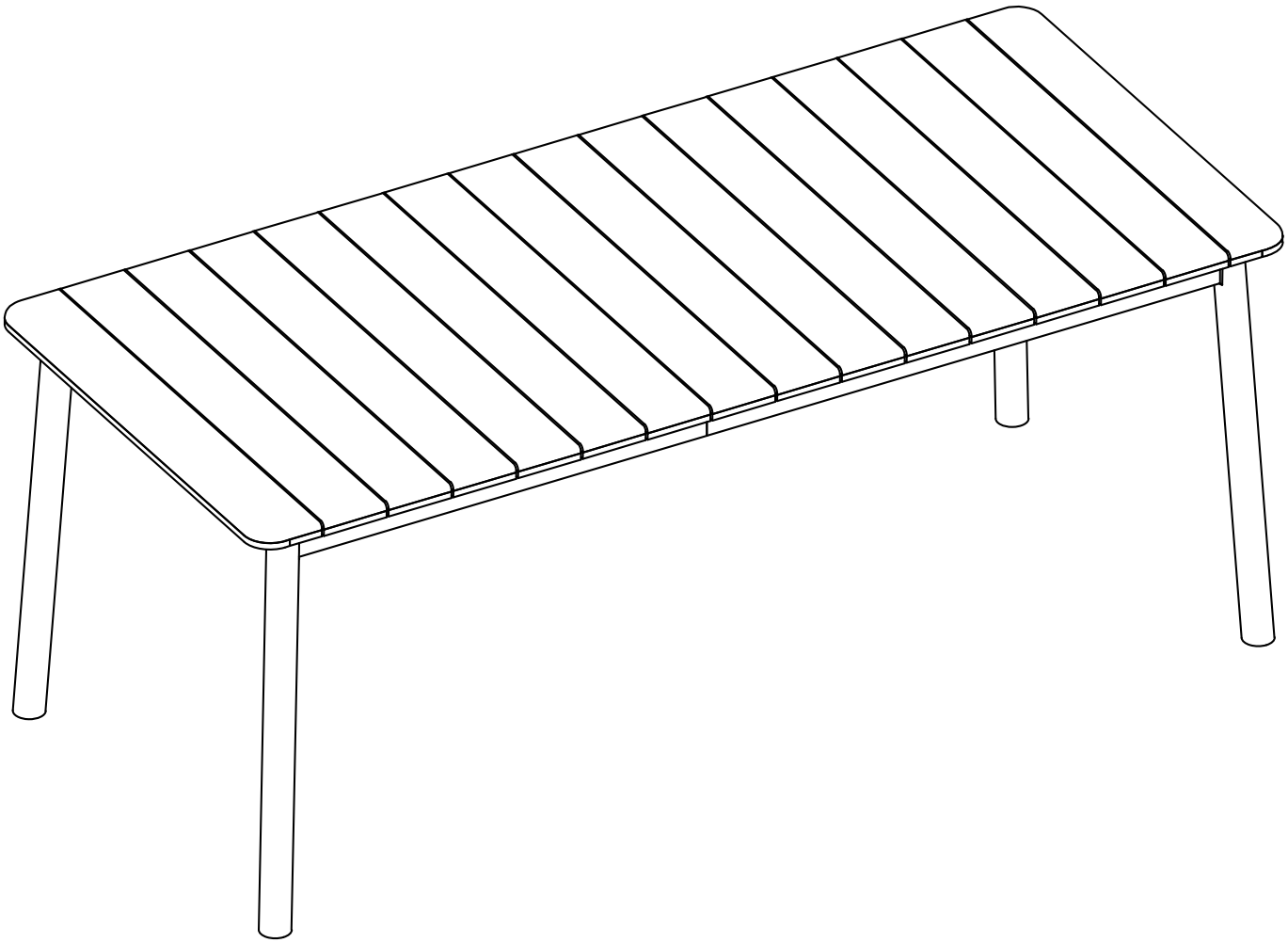

CAUTION: This Table is NOT a TOY
Keep your child/children at bay during the assembly process.
Whenever moving/lifting the Table and to prevent damage to the Table two adults are needed to execute these actions.

Parts List

Label	Picture	Description	QTY
A	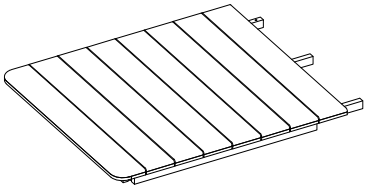	Left Table Top	1
B	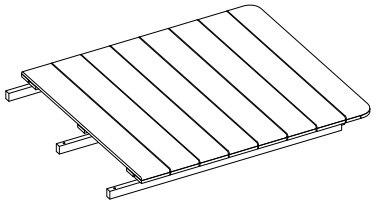	Right Table Top	1
C	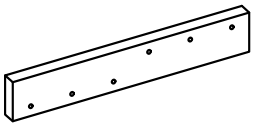	Table Support Bar	3
D		Leg	4

Hardware

Label	Picture	Description	QTY
①	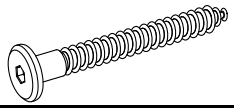	Screws (M6 x 60mm)	7
②	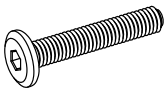	Bolt (M6 x 35mm)	19
③	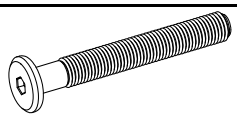	Bolt (M8 x 60mm)	9
④	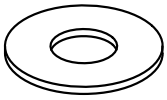	Washer	9
⑤		Spring Washer	9
⑥	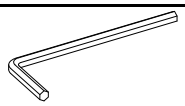	Allen Wrench	2

Assembly Preparation

Before Beginning Assembly:

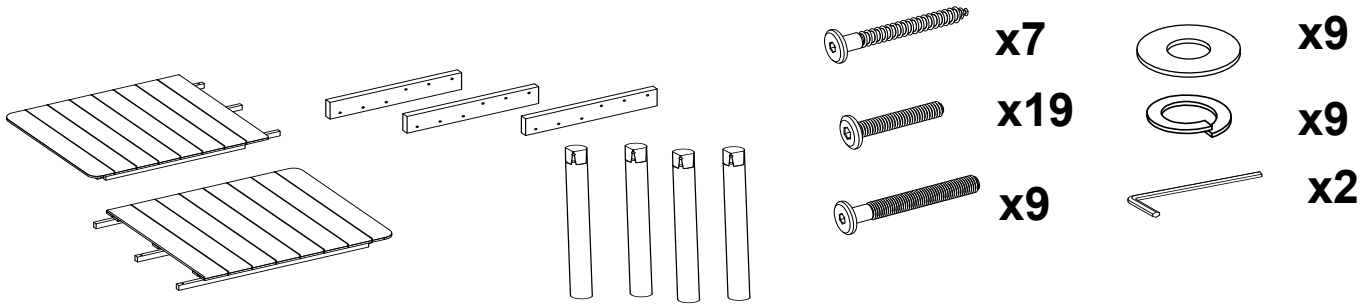

- Read instructions, cover to cover.
- Have 2 adults on hand for assembly.
- Do not assemble on flooring or carpet.
- Assemble on a clean non-marring surface (packing foam).
- Save all packaging until finished.

Assembly Steps

Overview

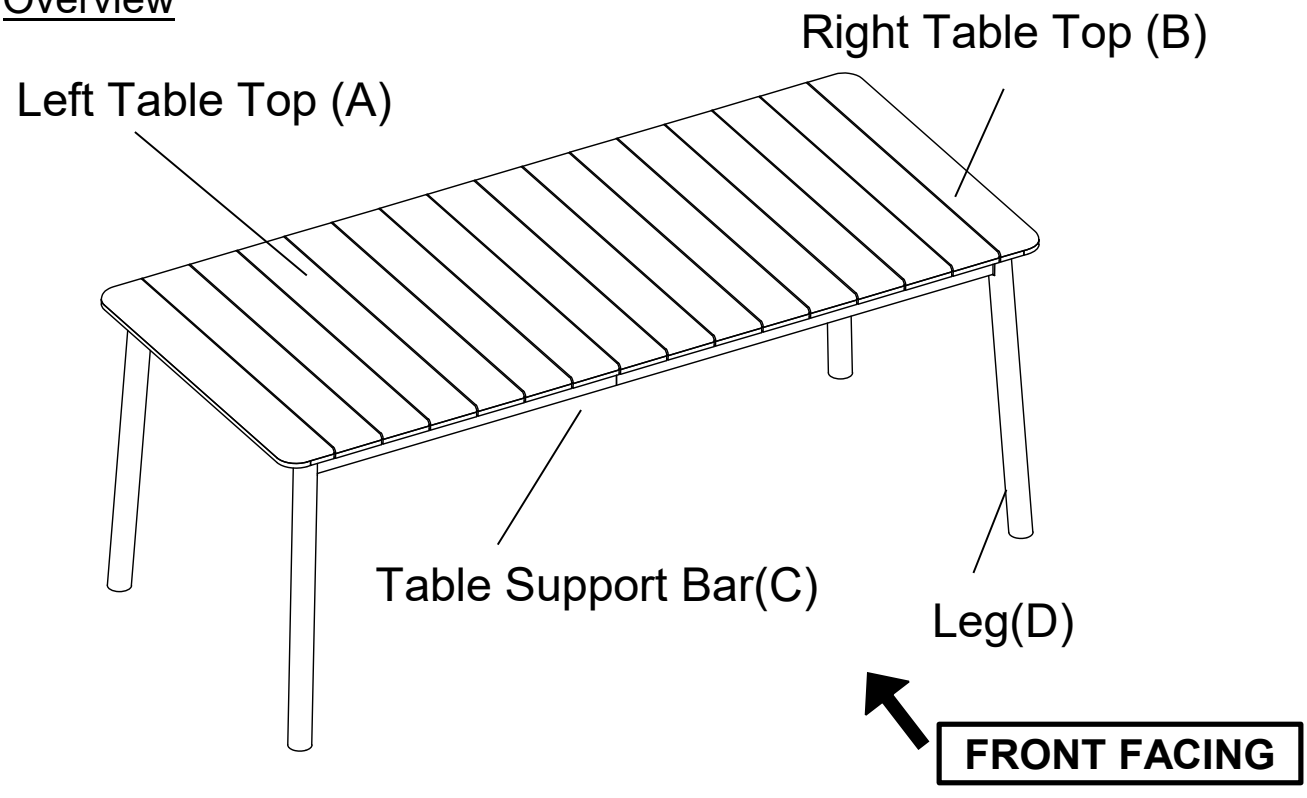

This Table has multiple parts and may require up to 30 minutes to assemble. To give you an overview of the Table parts, the above picture is to help you put the various parts into perspective. Please read through the instructions here below to familiarise yourself with the parts and steps before assembly.

Step 1

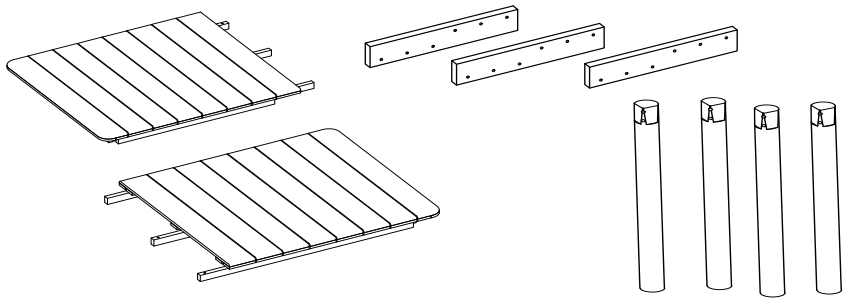

Unpack and place all parts on a clean, non-marring surface.

Step 2

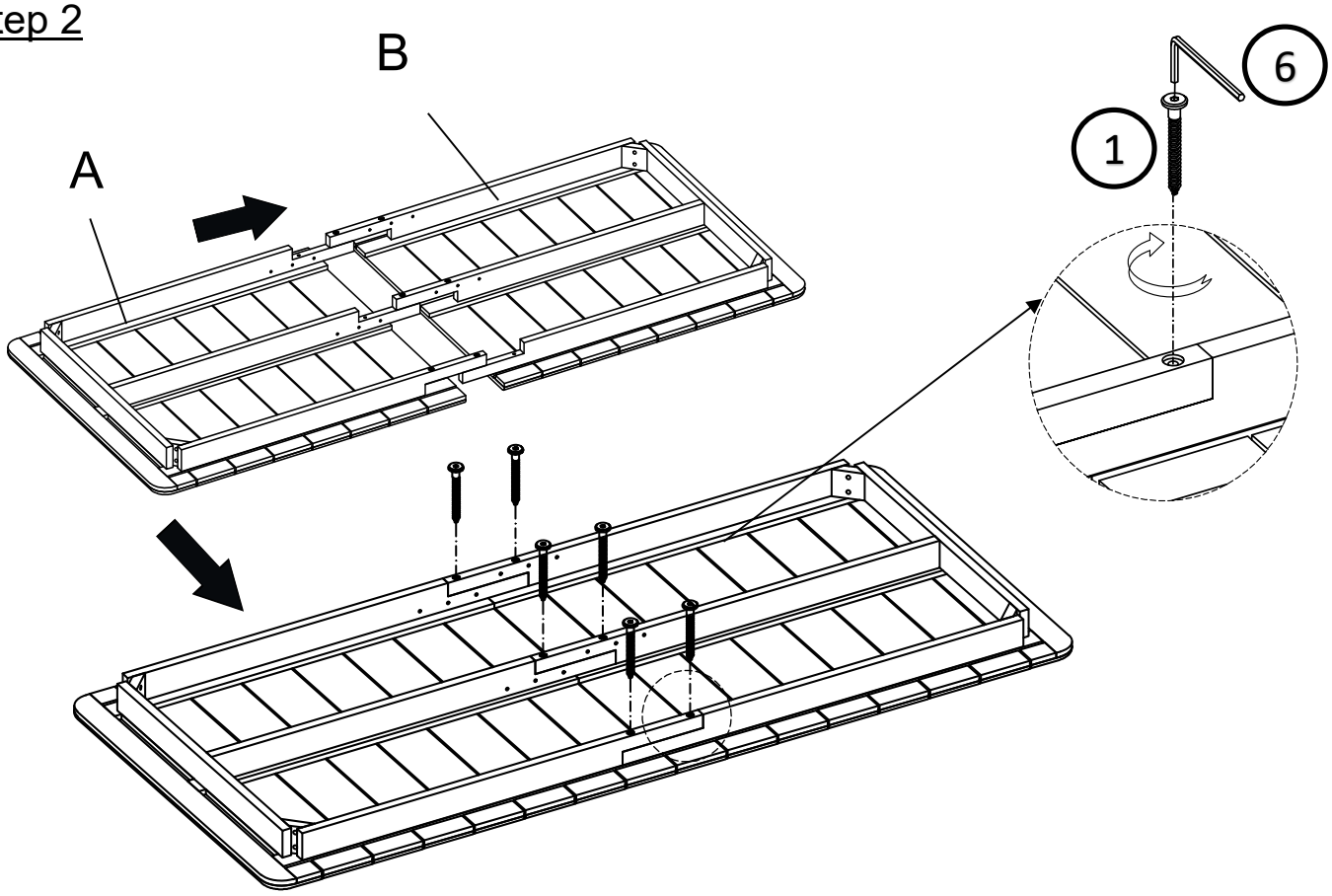

Place the Table Top (A) and the Table Top (B) facedown onto a clean, non-marring surface.

First, attach theTable Top (A) into theTable Top (B), using Screw (①), and the Allen Wrench (⑥). as shown above.

Do not fully tighten the Bolts.

Step 3

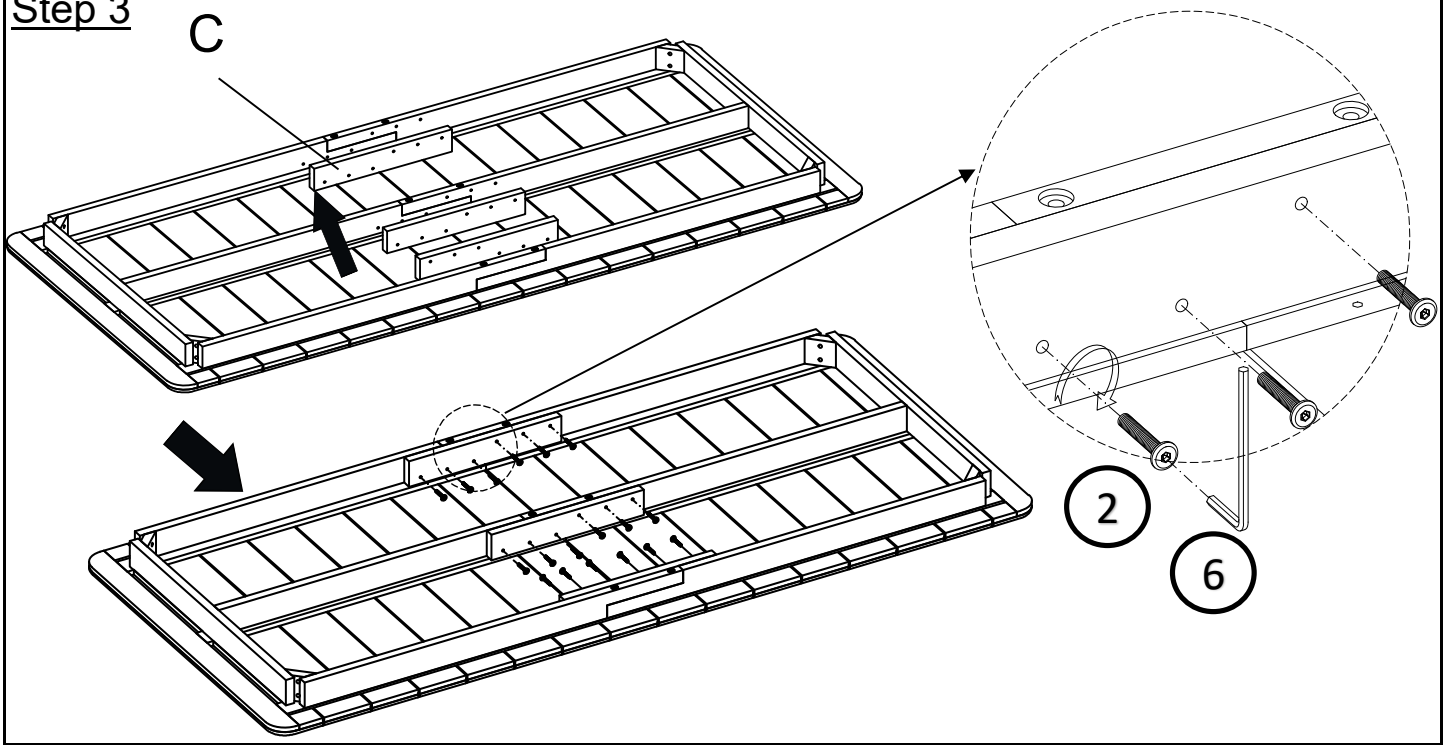

Attach the Table Support Bar (C) into theTable Top (A) and theTable Top (B), using Bolt (②), and the Allen Wrench (⑥). as shown above.
Repeat the same process with the remainingTable Support Bar (C) .
Do not fully tighten the Bolts.

Step 4

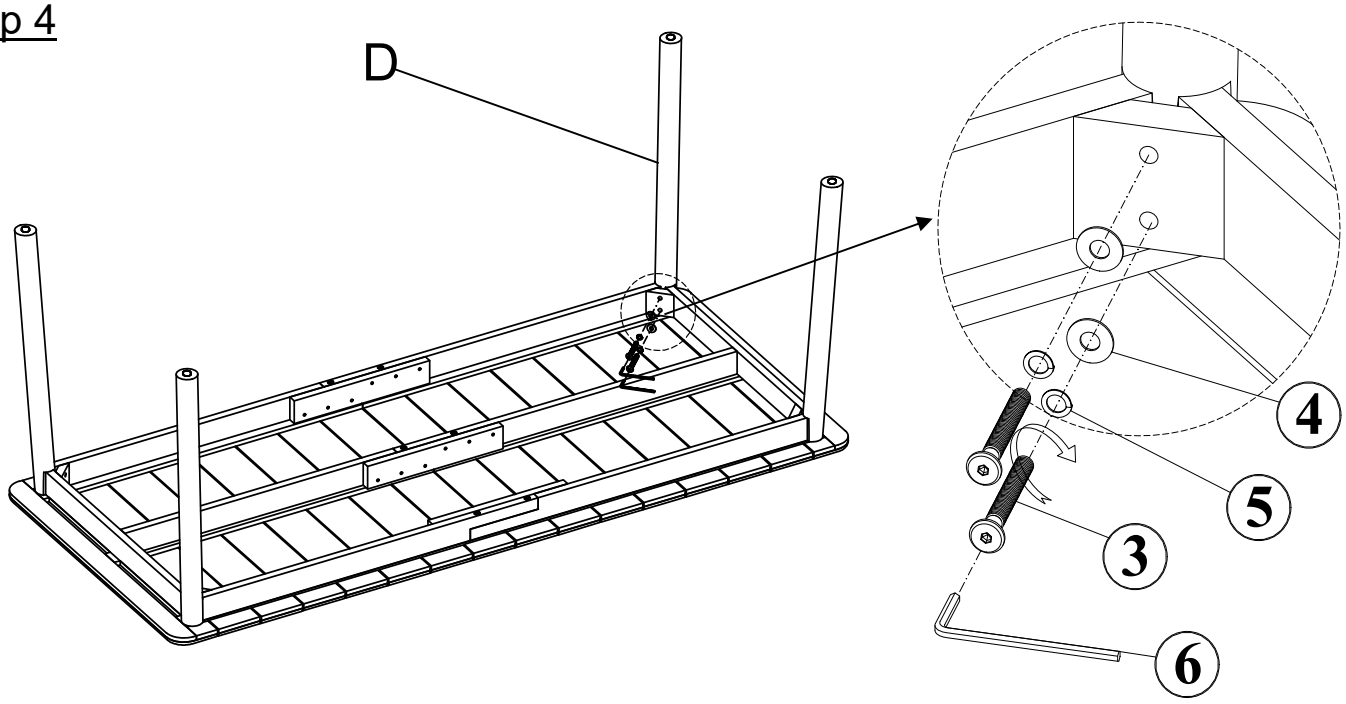

Insert the Legs (D) into the mounting positions on the Step 3, then secure them using Washers (④), Spring Washers (⑤), Bolts (③), and the Allen Wrench (⑥) as shown above.
Repeat the same process with the remaining Legs (D).
Do not fully tighten the Bolts.

Step 5

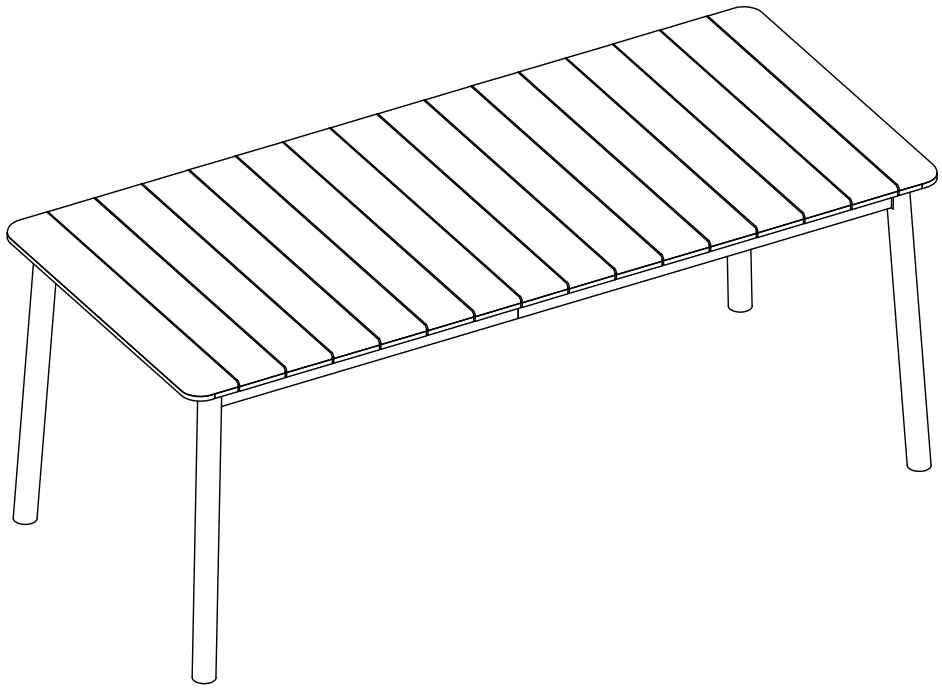

Turn the Table right side up, with assistance from your adult partner.
Exert pressure floorwards, onto the Table with both your hands.
This pressure will help the Legs and Table Top reach full alignment status.
Check for wobbles on a LEVEL surface.
If no wobbles are found proceed to tighten the Bolts in a sequential manner, until evenly secured.
When tightening the Bolts tighten sequentially.
Do no tighten any Bolt fully and then move on towards the next one.
If there are still wobbles after tightening, loosen the Bolts and execute the same above process.
Your Table is ready for use.
This Table can only be used on a flat, level surface.

Questions & Answers about Proposition 65

• What is Proposition 65?

Proposition 65 requires businesses to provide warnings to Californians about significant exposures to chemicals that cause cancer, birth defects or other reproductive harm. These chemicals can be in the products that Californians purchase, in their homes or workplaces, or that are released into the environment. By requiring that this information be provided, Proposition 65 enables Californians to make informed decisions about their exposures to these chemicals.

Proposition 65 also prohibits California businesses from knowingly discharging significant amounts of listed chemicals into sources of drinking water.

Proposition 65 requires California to publish a list of chemicals known to cause cancer, birth defects or other reproductive harm. This list, which must be updated at least once a year, has grown to include approximately 900 chemicals since it was first published in 1987.

• What types of chemicals are on the Proposition 65 list?

The list contains a wide range of naturally occurring and synthetic chemicals that include additives or ingredients in pesticides, common household products, food, drugs, dyes, or solvents. Listed chemicals may also be used in manufacturing and construction, or they may be byproducts of chemical processes, such as motor vehicle exhaust.

• What does a warning mean?

If a warning is placed on a product label or posted or distributed at a workplace, a business, or in rental housing, the business issuing the warning is aware or believes that it is exposing individuals to one or more listed chemicals.

By law, a warning must be given for listed chemicals unless the exposure is low enough to pose no significant risk of cancer or is significantly below levels observed to cause birth defects or other reproductive harm.

• Where can I get more information on Proposition 65?

If you have specific questions on the administration or implementation of Proposition 65, you can contact OEHHA's Proposition 65 program at P65.Questions@oehha.ca.gov, or by phone at (916) 445-6900.