Description : **END TABLE**
Product Size : **24" x 22" x 24"H**

Your furniture purchase is an investment. Here are a few tips to maximize the lifetime of your furniture with a minimum amount of effort. Properly caring for your furniture can help ensure that it looks great year after year.

Wood Furniture maintenance:
- Always dust, wipe, and dean with the grain of the wood.
- Dust with a soft doth. Dust will scratch the furniture surface if not removed properly.
- Use the same type of polish consistently as interchanging oil-based and wax-based polishes will cause a build-up and result In a foggy or cloudy appearance.
- If a polished surface becomes foggy, rub it with a cloth dipped In a solution of one tablespoon vinegar to one quart of water. Rub softly with the grain until the surface is completely dry.
- Soap and water are not advisable for wood surfaces. Water can penetrate the finish and raise the grain on wood, causing damage.
- Remember to change dusting cloths frequengy as dirty cloths may scratch your fumlture's surface.

The Enemies of Wood:
- Moisture is wood's worst enemy. Liquid spills should be gently wiped up immediately. Coasters should be used under all beverages.
- Do not allow rubber or vinyl materials to lie on the furniture. Chemicals in rubber may leave a stain. Put a strip of felt or leather under accessories that have rubber or vinyl.
- Heat creates a chemical change In the fumlture's finish, which results in a white spot. Use protective pads under hot dishes, appliances, etc.
- Sunlight's ultraviolet rays an damage the finish of funiiture. Do not plaoe furniture directly against a heater or radiator and do not place in the path of hot streams of air from central heating. This will cause extreme localized drying of the wood.

High Gloss Resin Table Maintenance:
- Resin tabletops have approximately 1/8" of resin coat on the top face of the table, which will resist ice, water, wine, liquor, food, leaning fluids, and warn or hot liquids; however, cups, glasses, etc. containing hot liquids should not be left on the table without a coaster for protection.
- Resin tabletops will scratch just the same as any other glossy surface and basic precautions should be taken.
- For lasting shine, the resin table should be waxed with a car wax that doea not contain silicon. Maintaining this wax build-up will result in a high gloss shine.
- When wiping down the table, a soft, clean rag should be used. Do not use a heavy paper.

Granite Top maintenance:
The surface of the granite on your table has been polished or sealed to create a generally non-porous surface. The alone haa many natural characteriatics Induding: veining, hailrline cracks, and color variations - which make up the stone's beauty.
To maintain the beauty of your granite:
- Protect surlbces ftom scratching, staining and etching by:
  * Keeping them free of debris or sharp objects
  * Wiping up spills immediately
  * Avoiding contact with chemicals (particularly acid-based materials)
- Clean with pH neutral products or those especially fomulated for use on stone.
- It is not recommended to use a water-based solvent for dark granite as it will remove the polish horn the surface.
- After a period of use, apply a penetrating sealer to prevent contaminants frorn being absorbed into the stone.
- Remove stains with special absorbent poultices fomulated for uae on stone.
- Renew the surface on polished granite (granite with a high gloss surface by buffing with special stone polish, powder or cream.
  Do not use granite polish on granite with a matte finish, which has been honed rather than polished. (Penetrating sealer may be used on both polished and honed granite.)

Marble Top maintenance:
Marble may be stone, but it is porous stone and can stain easily. Treating marble surfaces the same as wood surfaces Is a great rule of thumb.
- It is recommended to seal the tops on a regular basis (every 6 to 12 months). A good quality stone sealer can be purchased horn any tiles/stone store or any homecare store and should be applied according to the manufacturer's recommendation.
- When sealed properly, marble tops can be used indoors and outdoors and can withstand any weather conditions except internal freezing. Snow or freezing rain will penetrate the table and cause cracks.

Caring for the Fabric on Upholstered Furniture:
- Frequent vacuuming of the entiro upholstered area will prevent dust from settling into the fibers.
- Professional deanlng Is always recommended for all upholstered pleces.
- Always pre-test a small area of fabric in an inconspicuous area when cleaning before proceeding.
- Do not use leaning products containing brightening agents.

ASSEMBLY INSTRUCTIONS

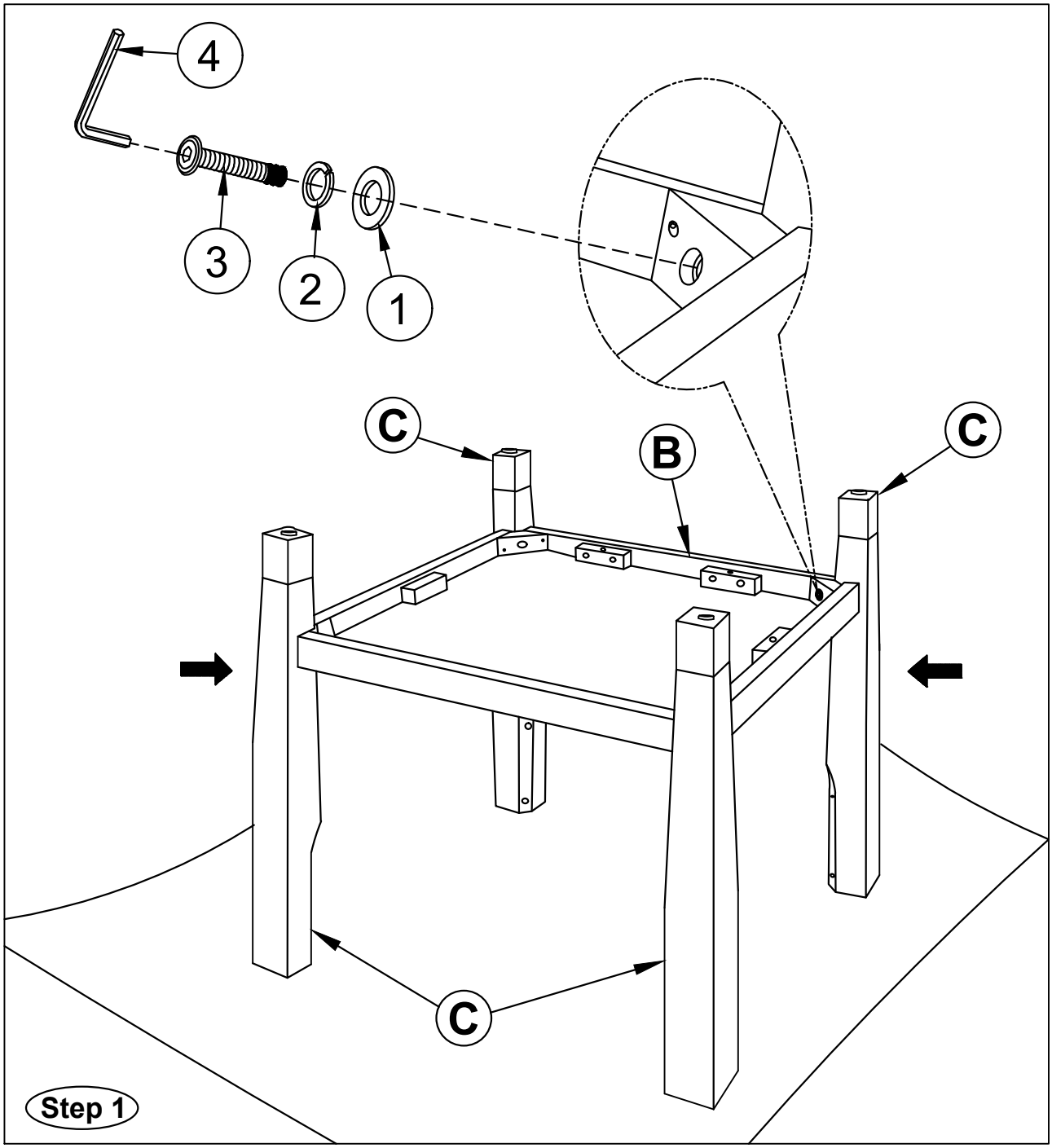

Step 1
Turn the Bottom Sheft (B) upside down on the floor with a piece of cloth or carpet underneath to prevent finish from scrathing.

Attach Leg (C) to the corner block of the Bottom Shelf (B) by inserting Flat Washer (1), Spring Washer (2), and Bolt (3). Tighten with Allen Key (4). Repeat this for the remaining three legs. Do not fully tighten.

ASSEMBLY INSTRUCTIONS

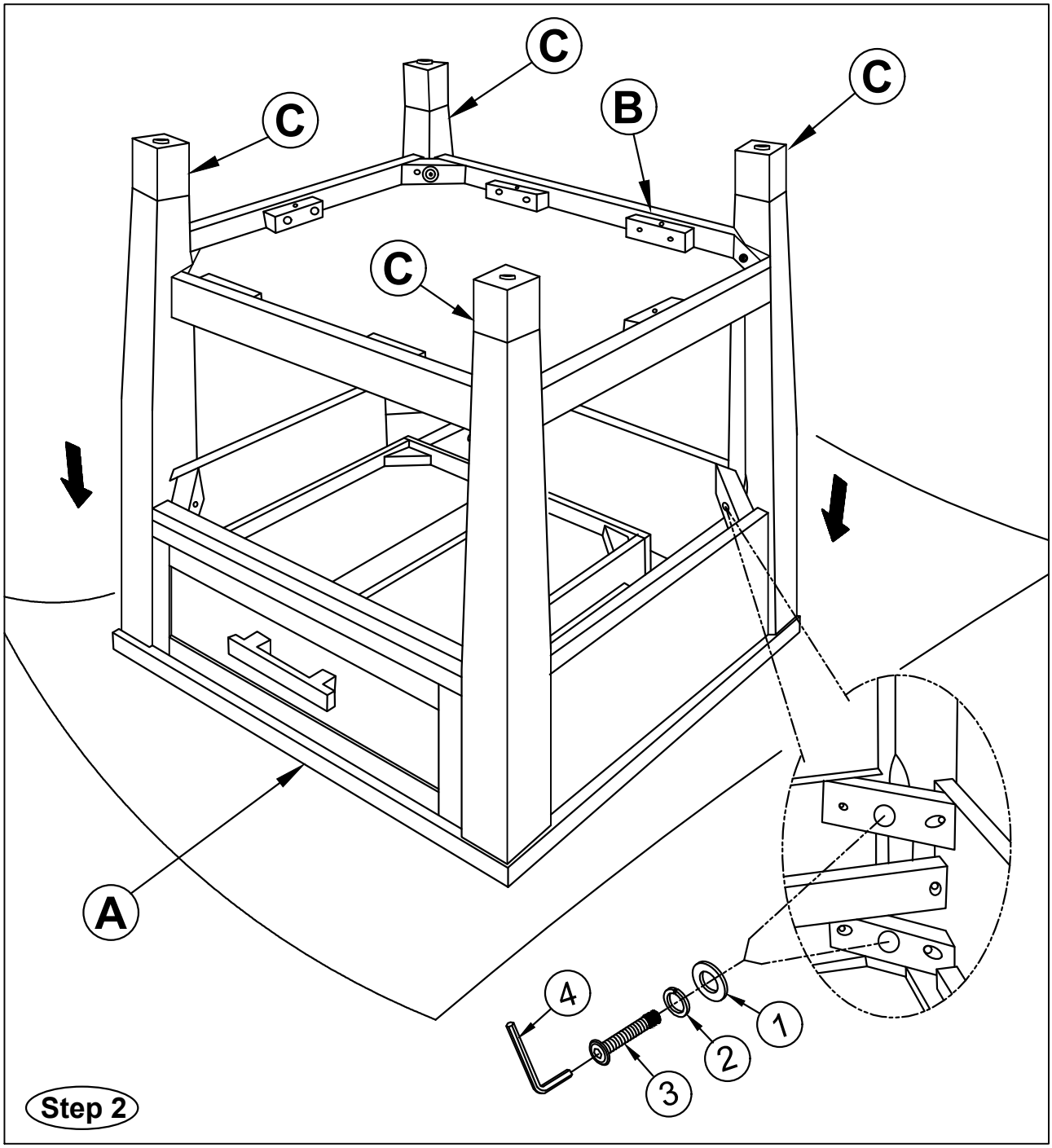

Step 2
Turn the Table top (A) upside down on the floor with a piece of cloth or carpet underneath to prevent finish from scratching.

Attach Table Base assembly in Step 1 to the Table top (A) by inserting Flat Washer (1), Spring Washer (2), and Bolt (3). Tighten with Allen Key (4).

ASSEMBLY INSTRUCTIONS

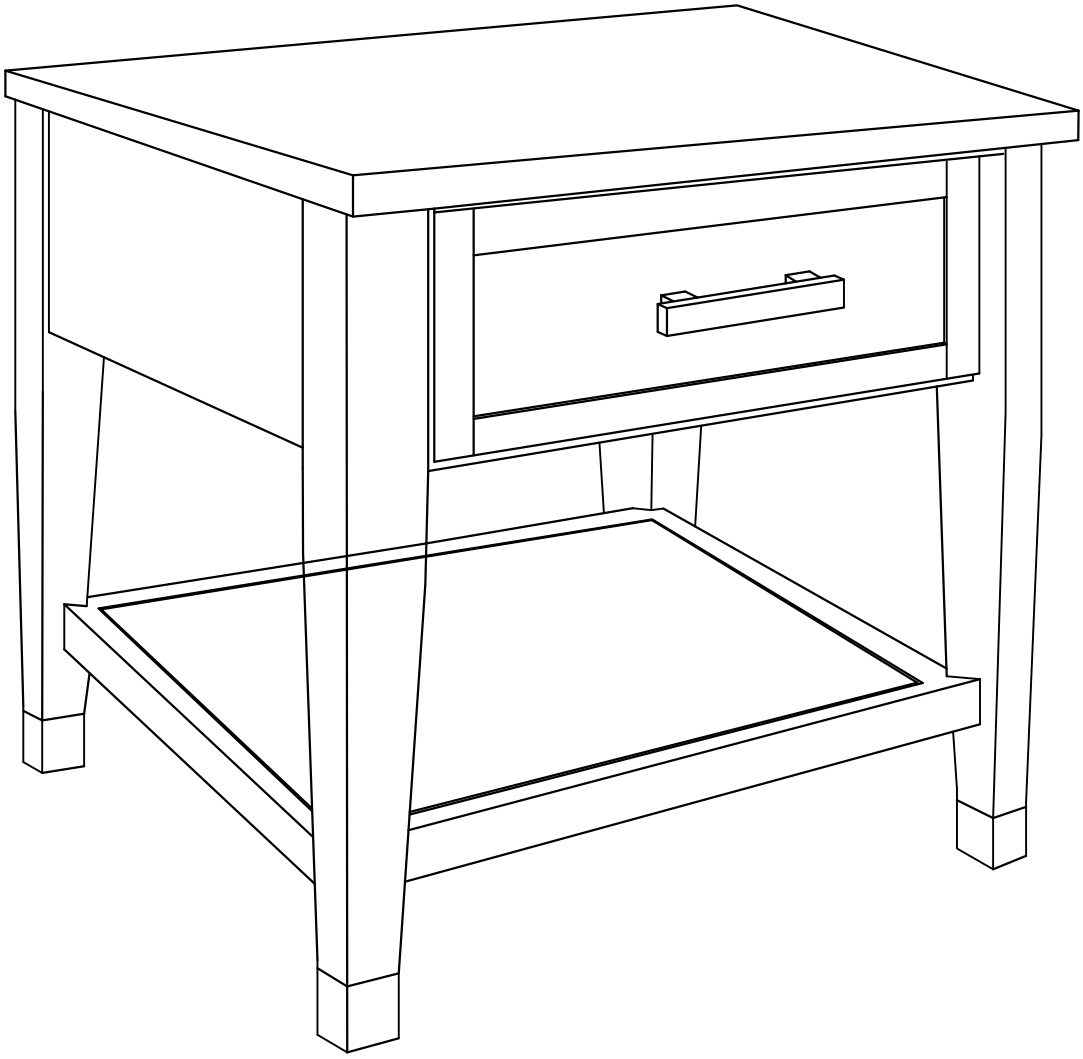

Turn the Table to the upright position. Product assemply is now completed.

PARTS LIST

(A) TABLE TOP (1 PC)

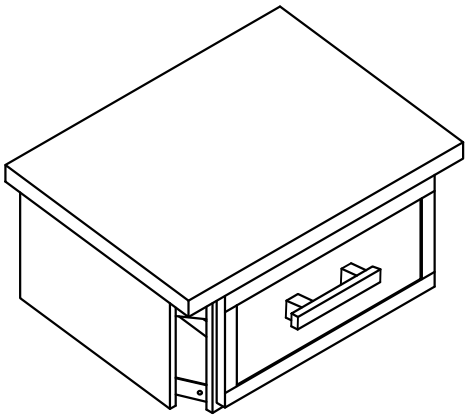

(B) BOTTOM SHELF (1 PC)

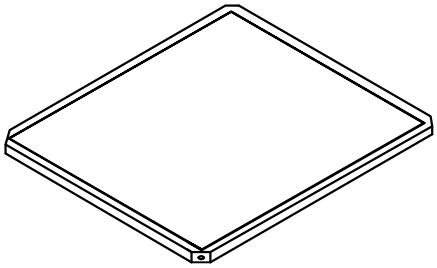

(C) LEG (4 PCS)

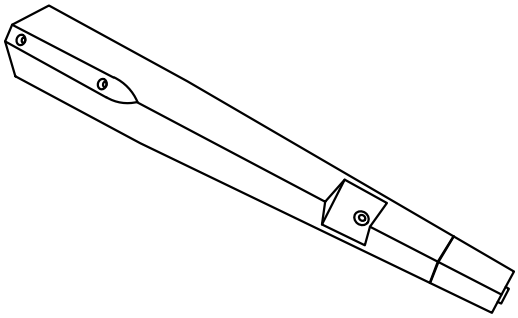

HARDWARE PACK

NO.	DESCRIPTION		SIZE	Q'TY
1	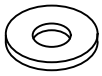	Flat Washer	Ø1/4" x 19mm	12pcs
2		Spring Washer	Ø1/4" x 13mm	12pcs
3		Bolt	Ø1/4" x 60mm	12pcs
4		Allen Key	4mm	1pc

PARTS LIST COMPLETE HARDWARE

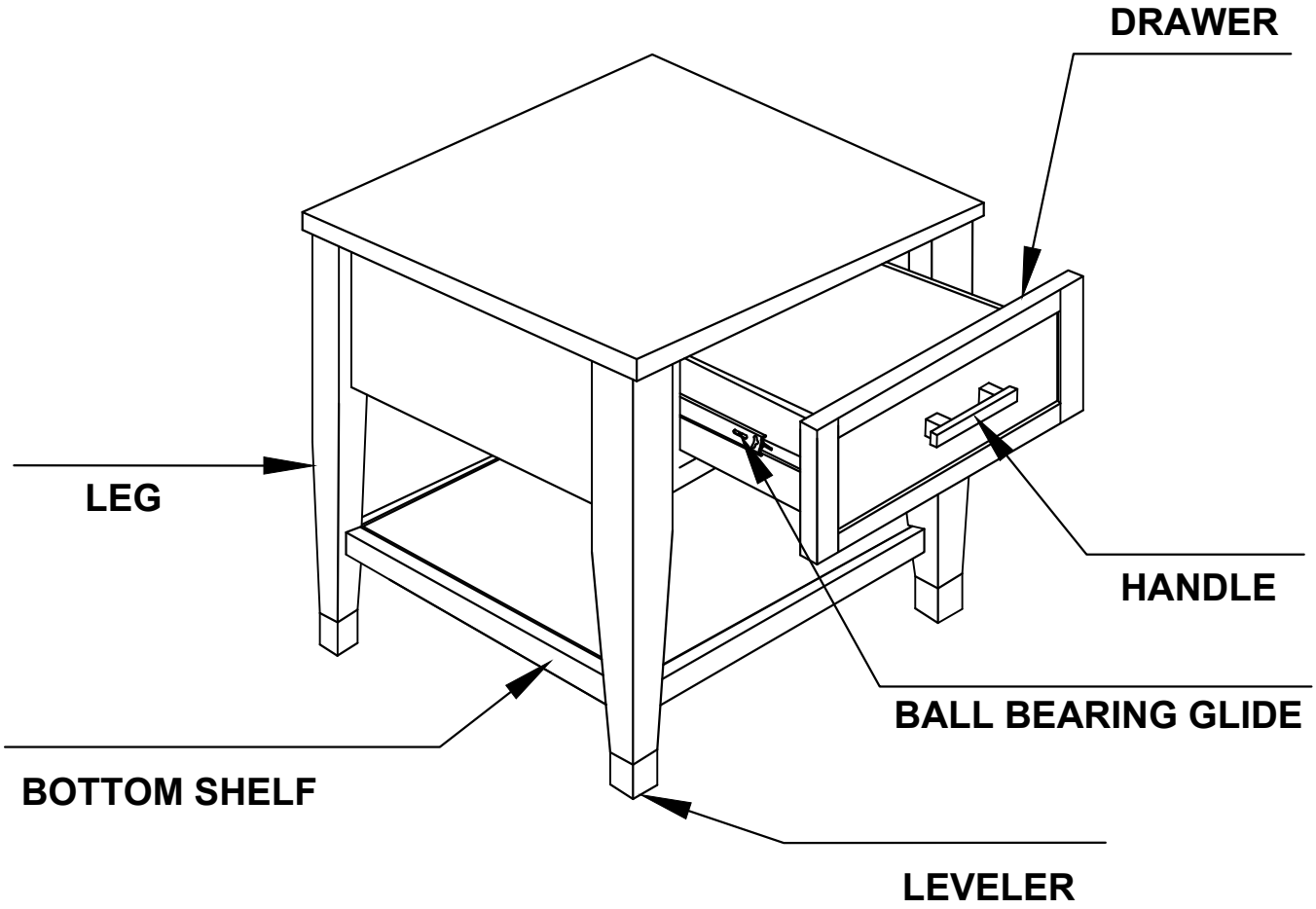

PRODUCT DETAILS	
Table top	Rubber Wood / MDF + Ash Veneer
Leg	Rubber Wood
Bottom Shelf	Rubber Wood / MDF + Ash Veneer
Product Size	24'' x 22'' x 24''H
Carton Size	26.75'' x 24.5'' x 15''H
Net Weight	46.2 LBS
Gross Weight	52.8 LBS
Cuft	5.69' / 1Pc