ASSEMBLY INSTRUCTIONS

FULL FLOOR BED WITH BOOK SHELF (WITH DOOR)

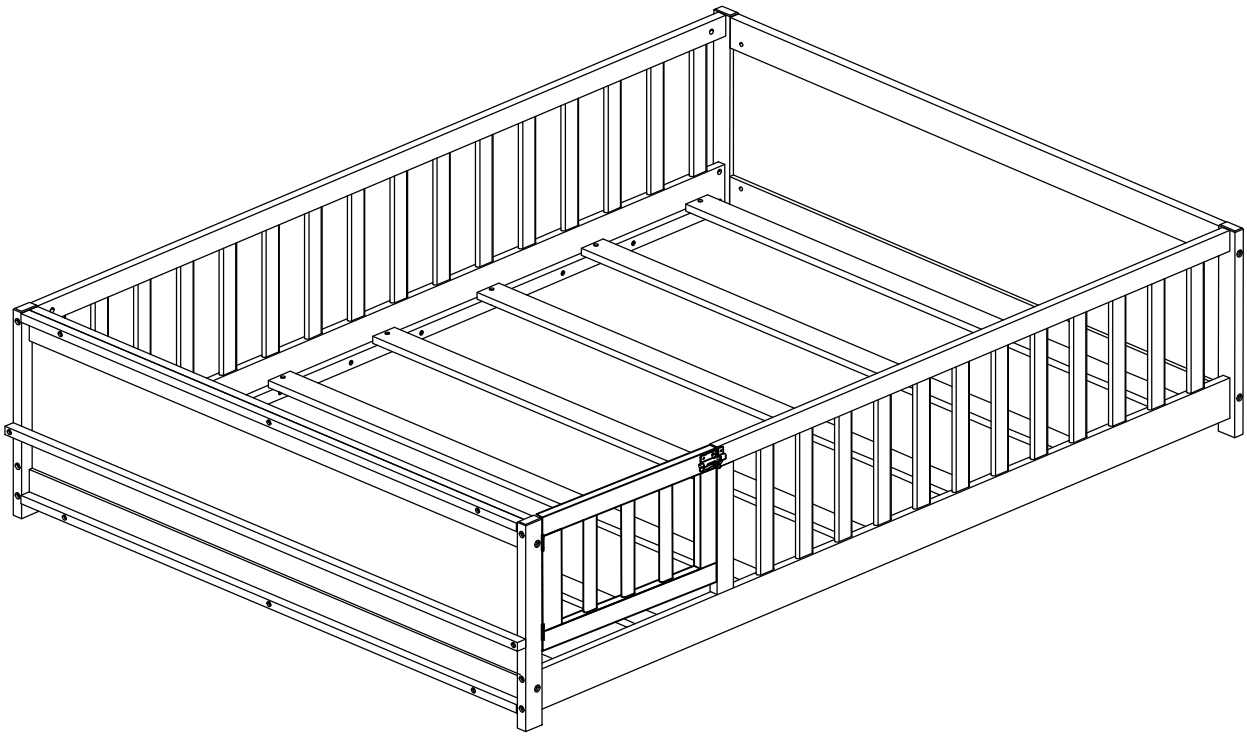

MK33829

Detail View

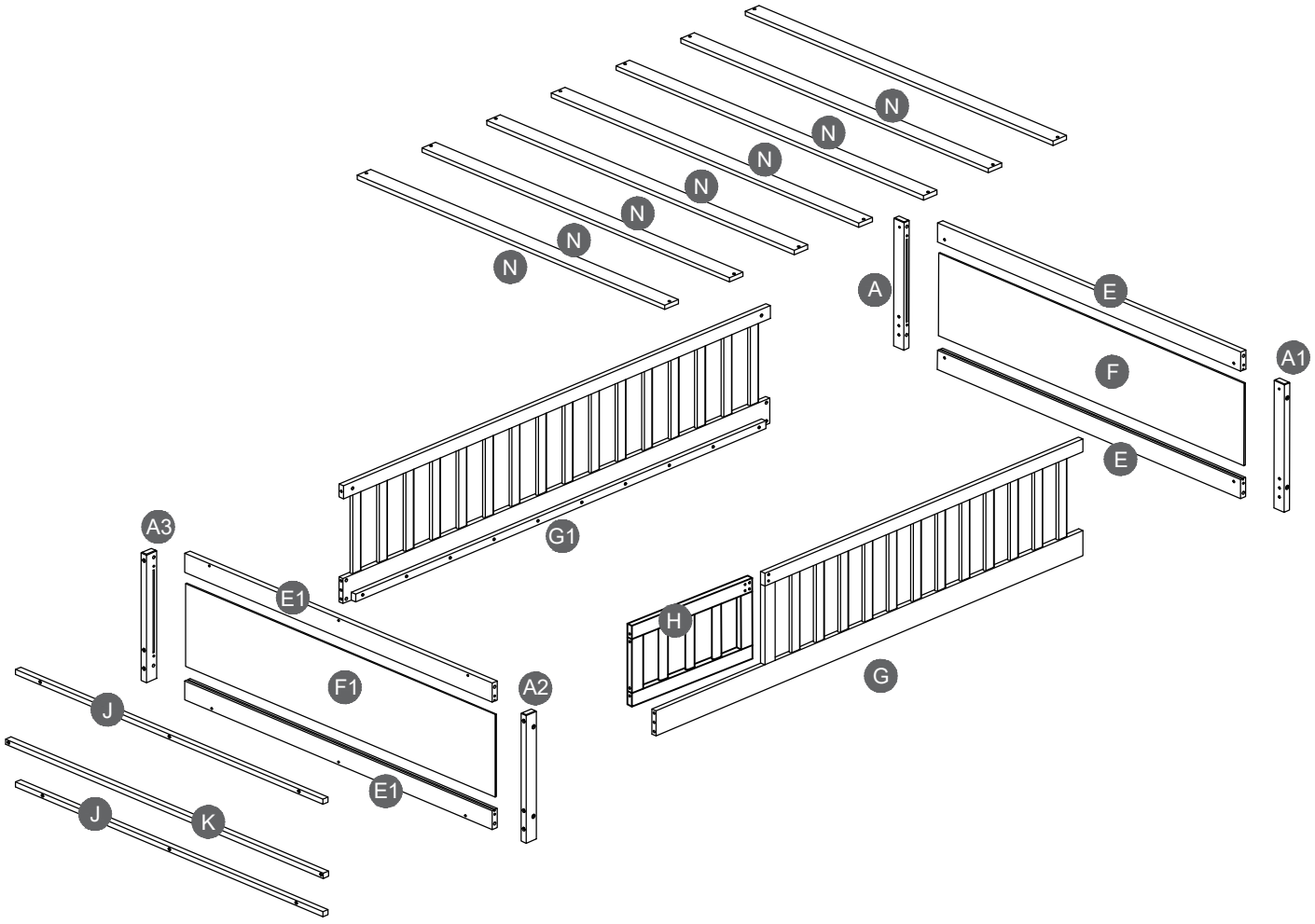

Part List

A2

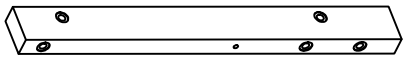

Leg - 1pc

A3

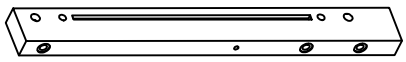

Leg - 1pc

A1

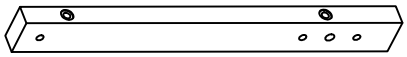

Leg - 1pc

A



Leg - 1pc

E1

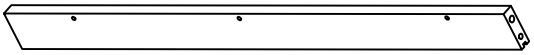

Fb. Panel (Top & Bottom) - 2pcs

E

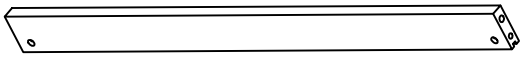

Hb. Panel (Top & Bottom) - 2pcs

F1



Fb. Mid. Panel (Long) - 1pc

F



Fb. Mid. Panel (Short) - 1pc

J

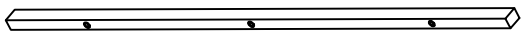

Fb. Support Bar (Top & Bottom) - 2pcs

K

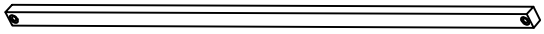

Fb. Support Bar (Mid.) - 1pc

G

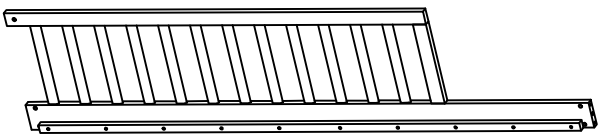

Side Rail Front - 1pc

G1

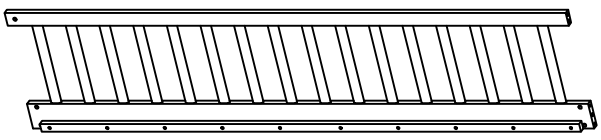

Side Rail Back - 1pc

H

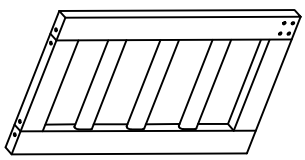

Door - 1pc

N

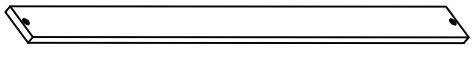

Bed Slats - 7pcs

Hardware List

1 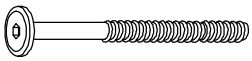 M6 x 80mm JCBC (9pcs)	**2** 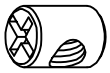 M6 x 15mm Barrel Nut (19pcs)	**3** 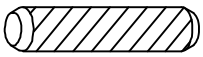 M10 x 40mm Wood Dowel (12pcs)
4  Sticker Cap (2pcs)	**5** 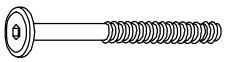 M6 x 65mm JCBC (10pcs)	**6** 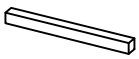 20 x 20 x 233mm Wood Block (1pc)
7  M4 x 25mm CSK Screw (14pcs)	**8**  M6 x 30mm JCBC-W (8pcs)	**9** 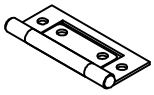 6 x 24 x 55mm (135°) Hinges (2pcs)
10 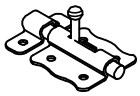 10 x 40 x 60mm Lock (1pc)	**11**  M3.5 x 16mm CSK Screw (14pcs)	**12**  M4 Allen Key (1pc)

ASSEMBLY TOOLS REQUIRED (NOT INCLUDED)

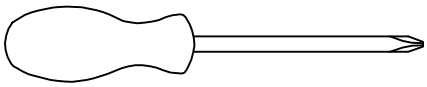

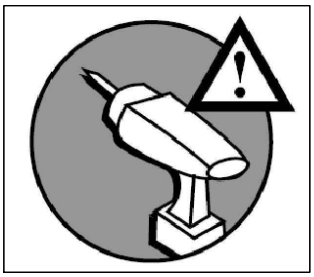

PLEASE BE CAREFUL DO NOT DAMAGE THE HOLE POSITION WHEN YOU USE POWER TOOLS !

STEP 1:

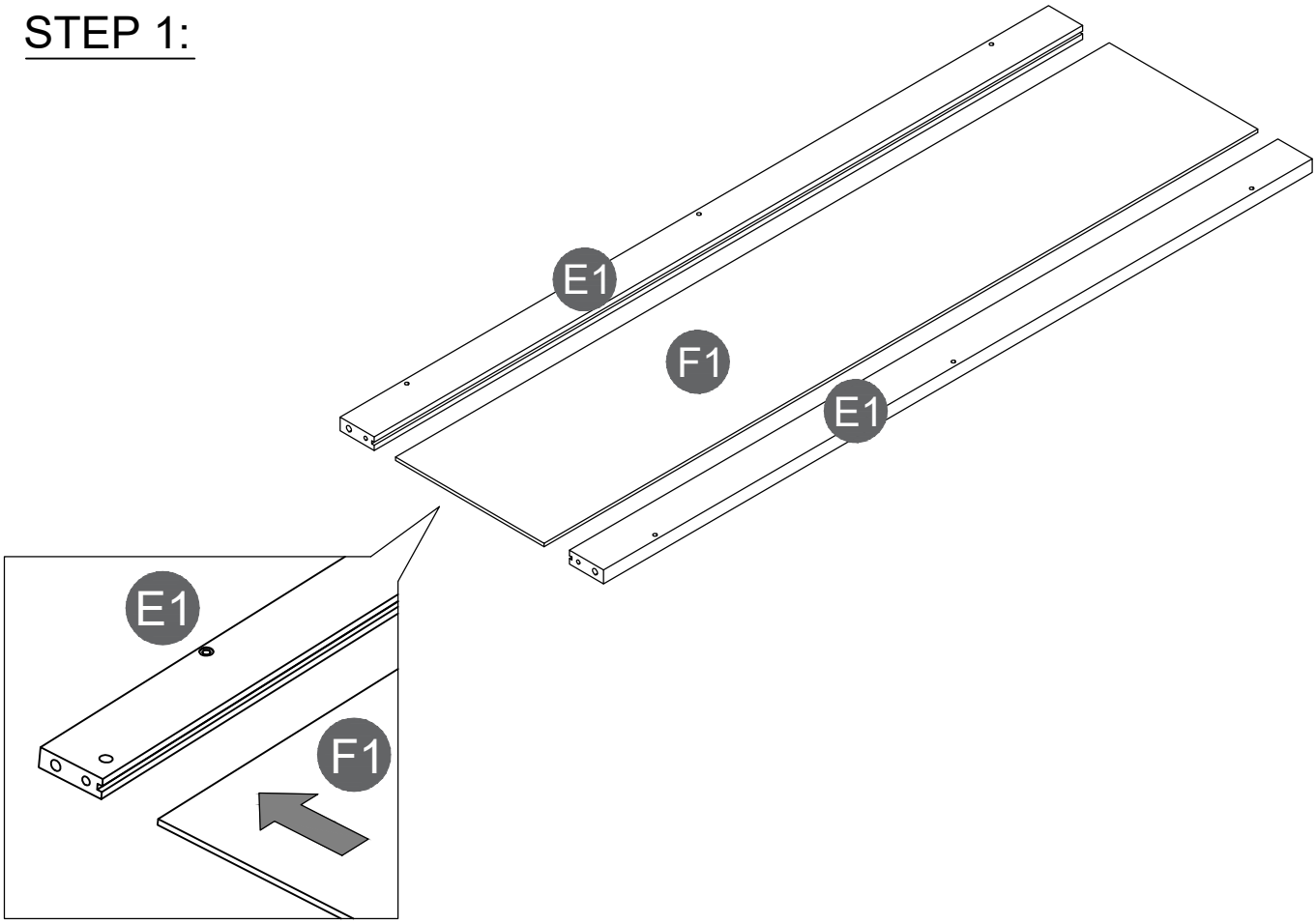

STEP 2:

2	3	5
4PCS	4PCS	4PCS

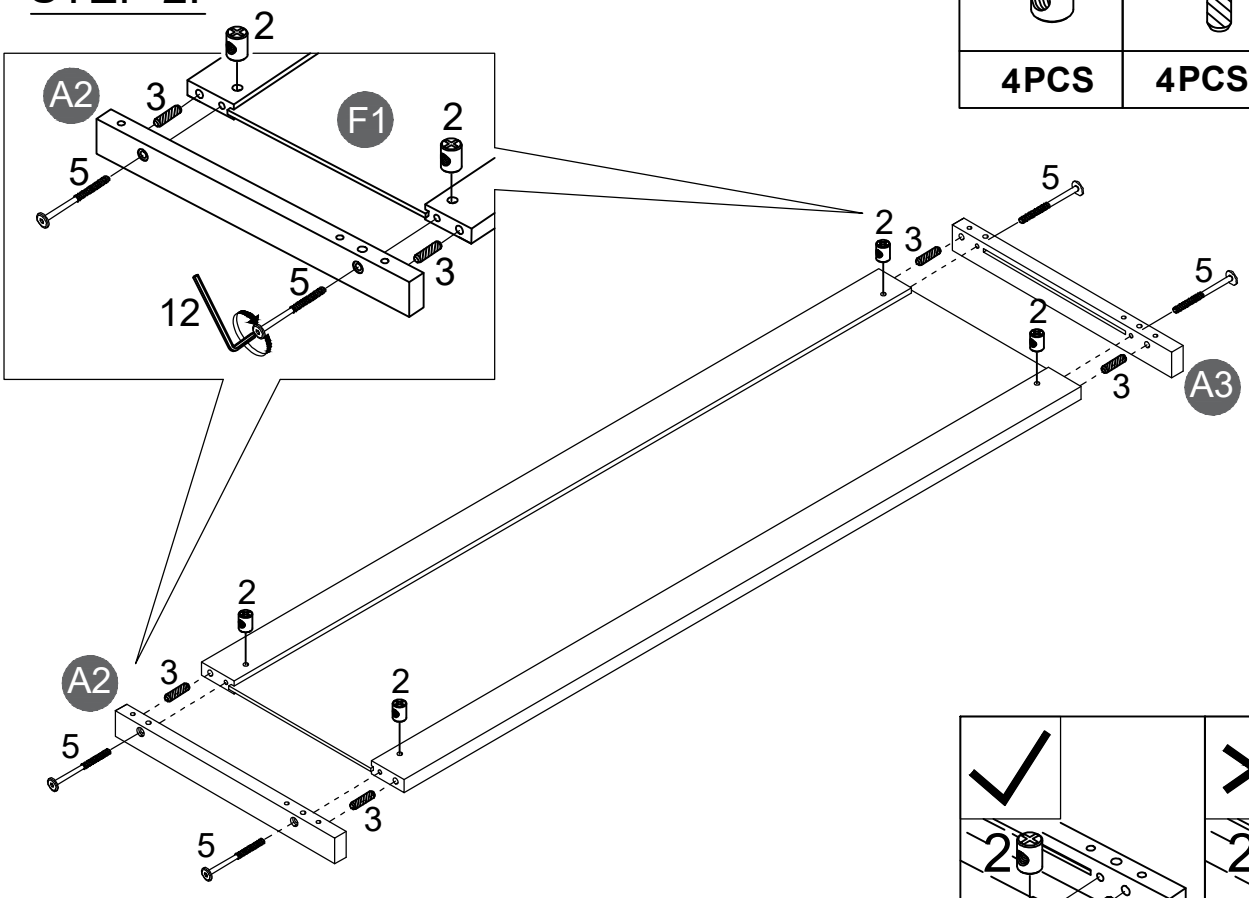

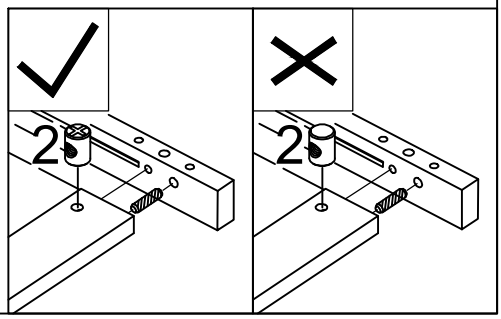

Note:Part2 will face up with the"+" mark on it, otherwise it cannot be tightened

STEP 3:

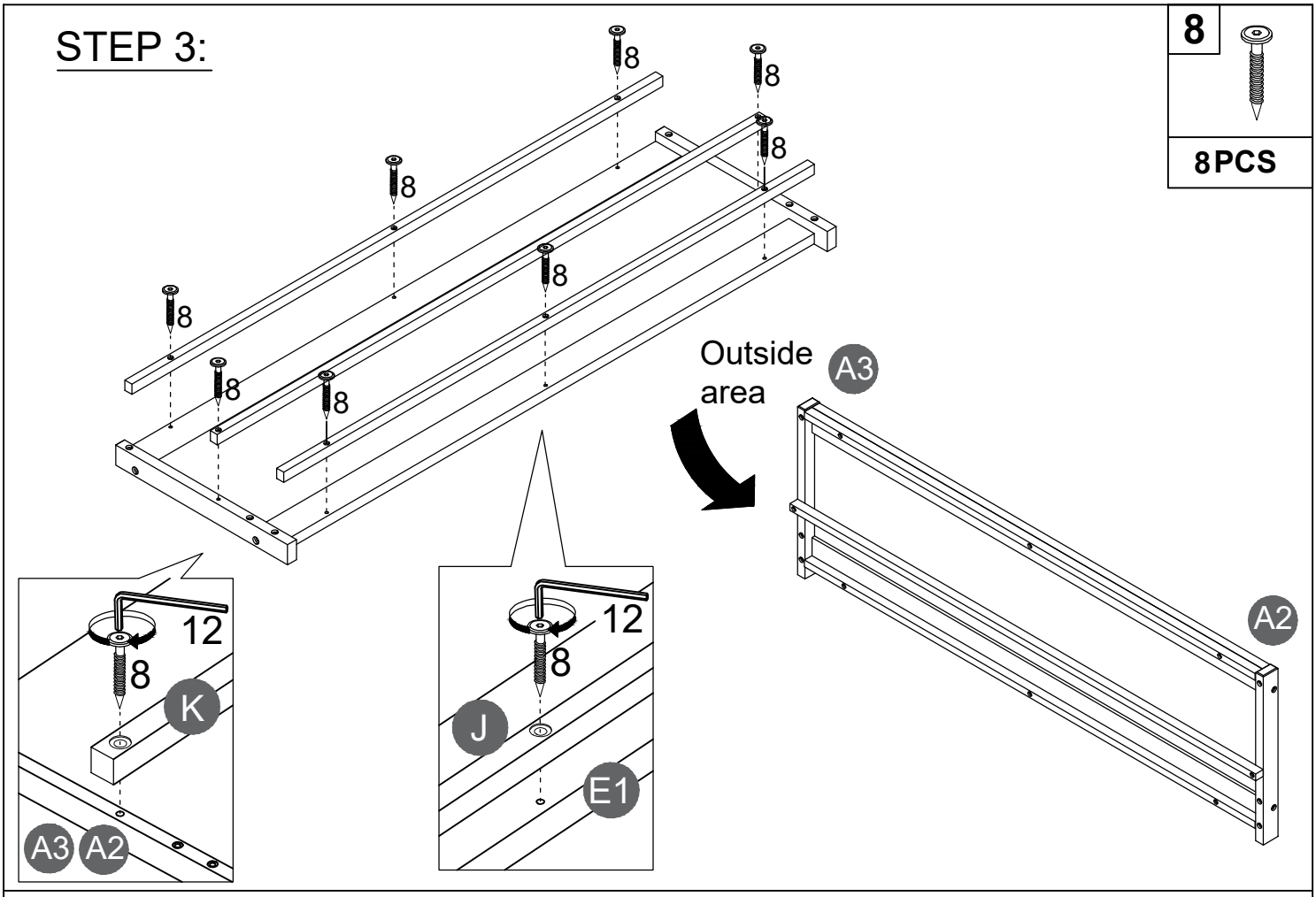

8

8PCS

STEP 4:

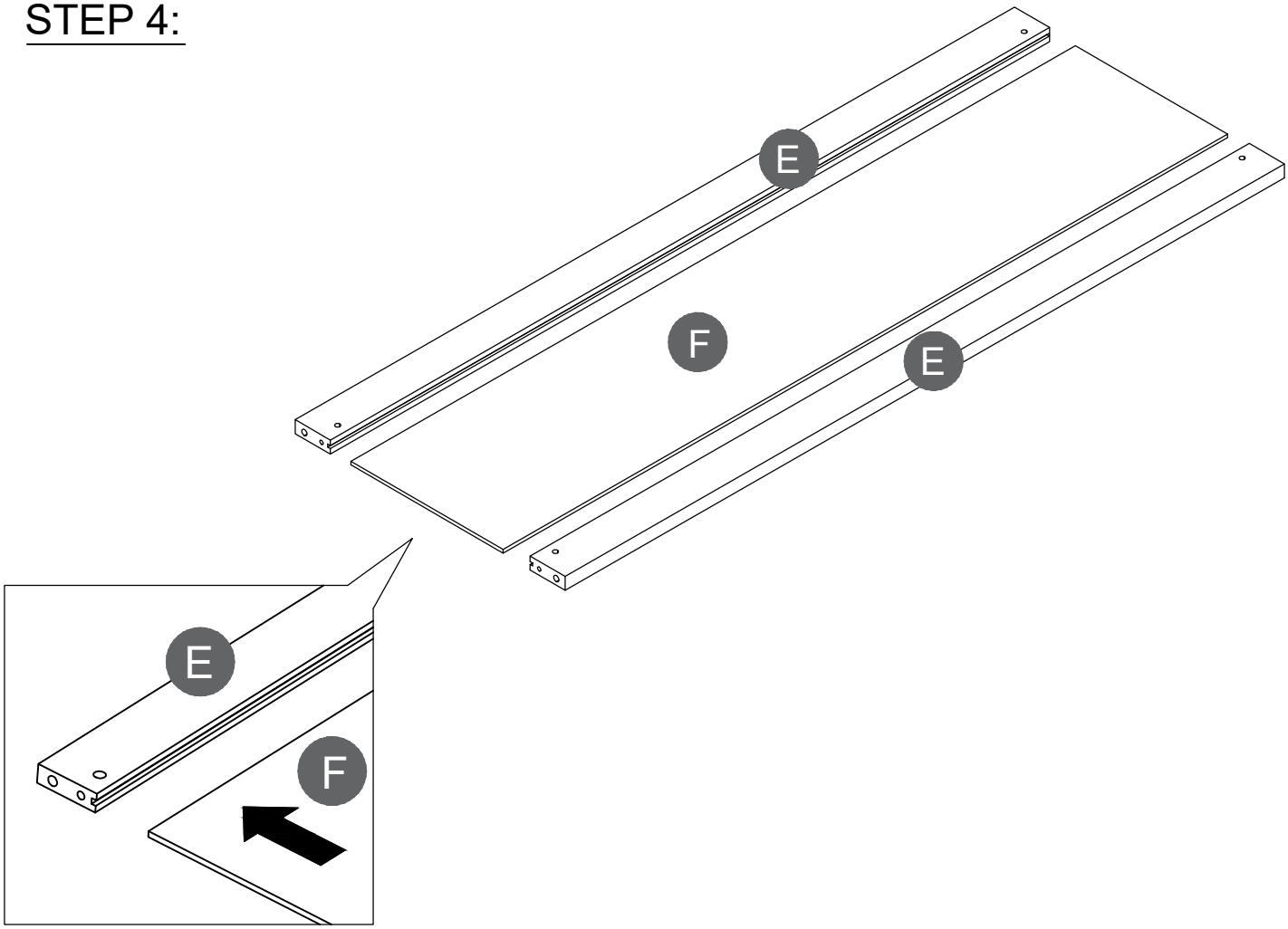

STEP 5:

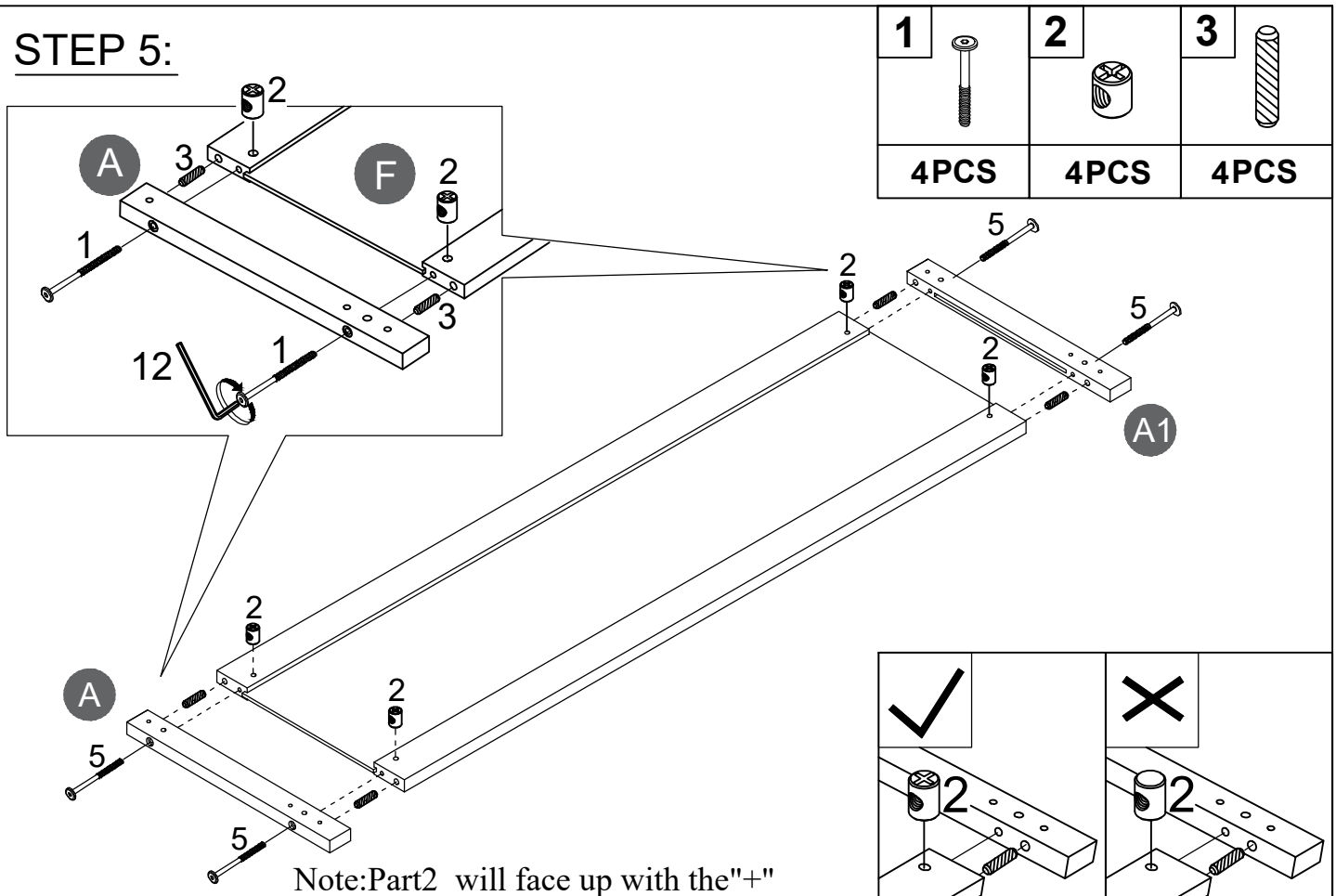
1
2
3
4PCS
4PCS
4PCS
A
F
A1
12
Note:Part2 will face up with the"+"
mark on it, otherwise it cannot be tightened

STEP 6:

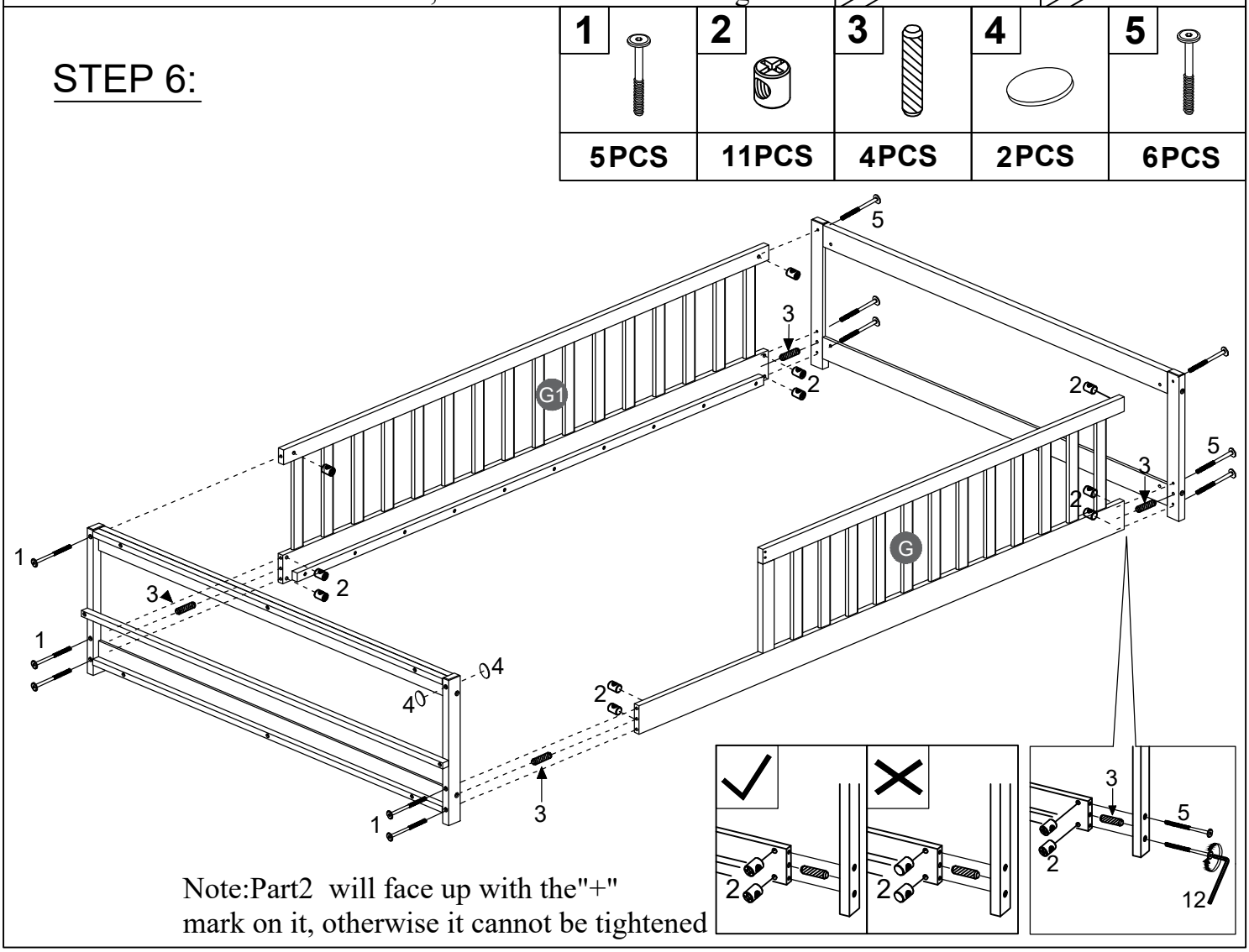
1
2
3
4
5
11PCS
4PCS
2PCS
6PCS
G
G1
12
Note:Part2 will face up with the"+"
mark on it, otherwise it cannot be tightened

STEP 7:

9	11
2PCS	4PCS

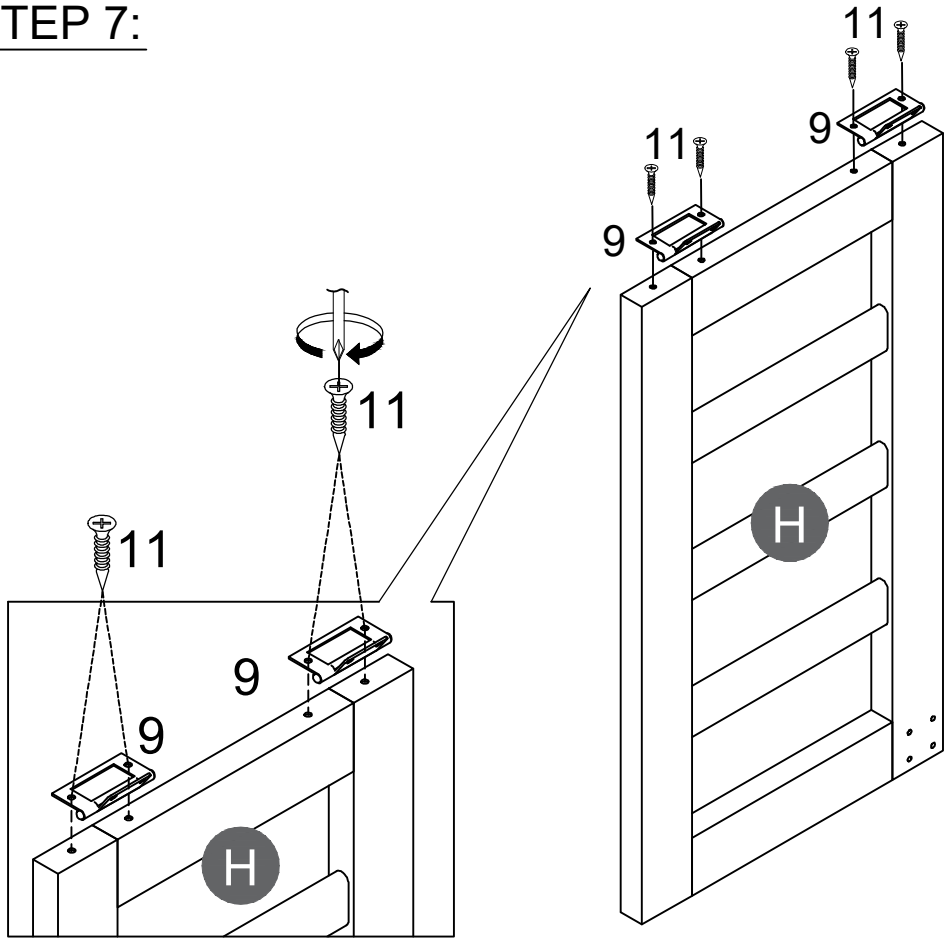

STEP 8:

11
4PCS

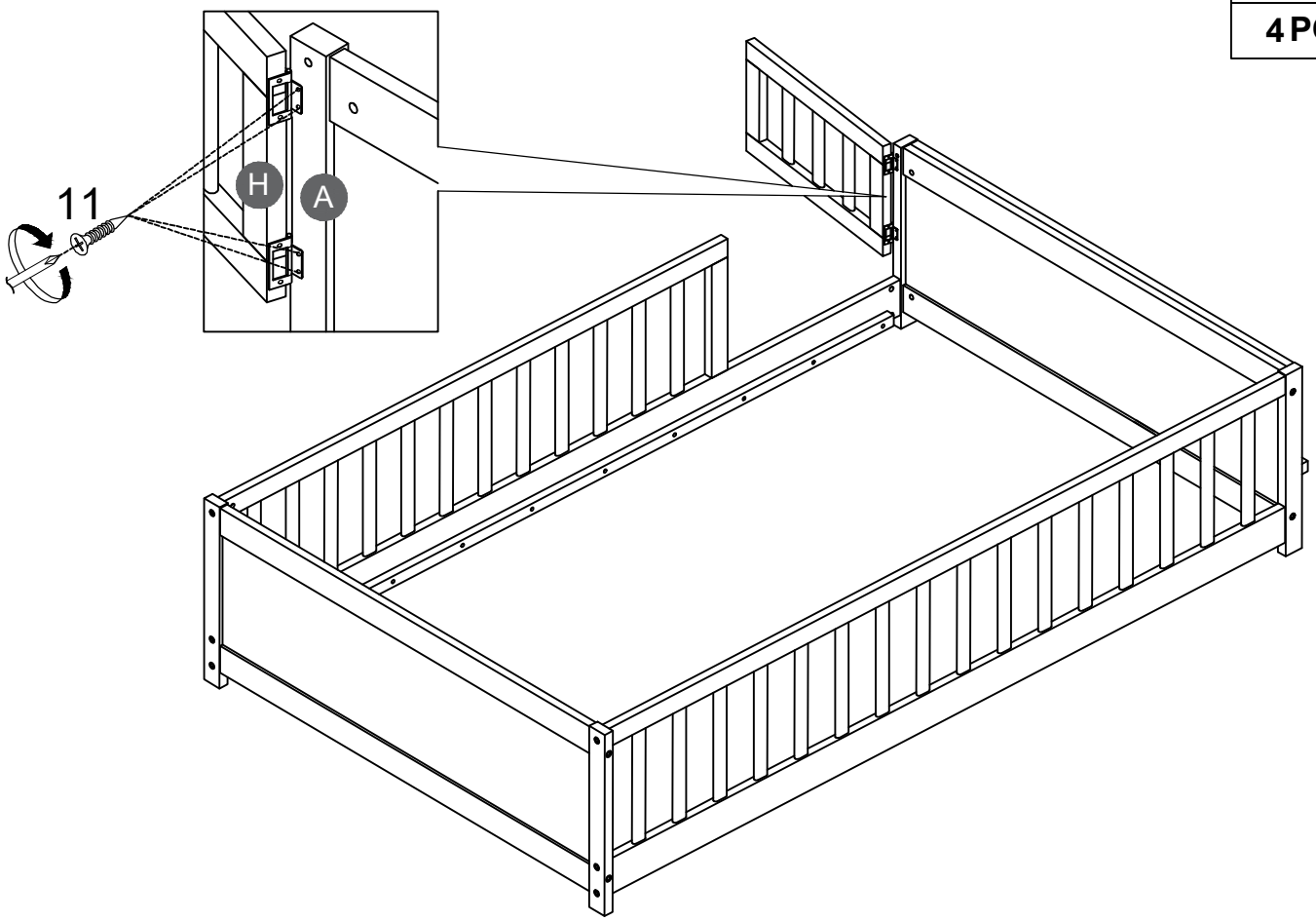

STEP 9:

10	11
1 PC	6 PCS

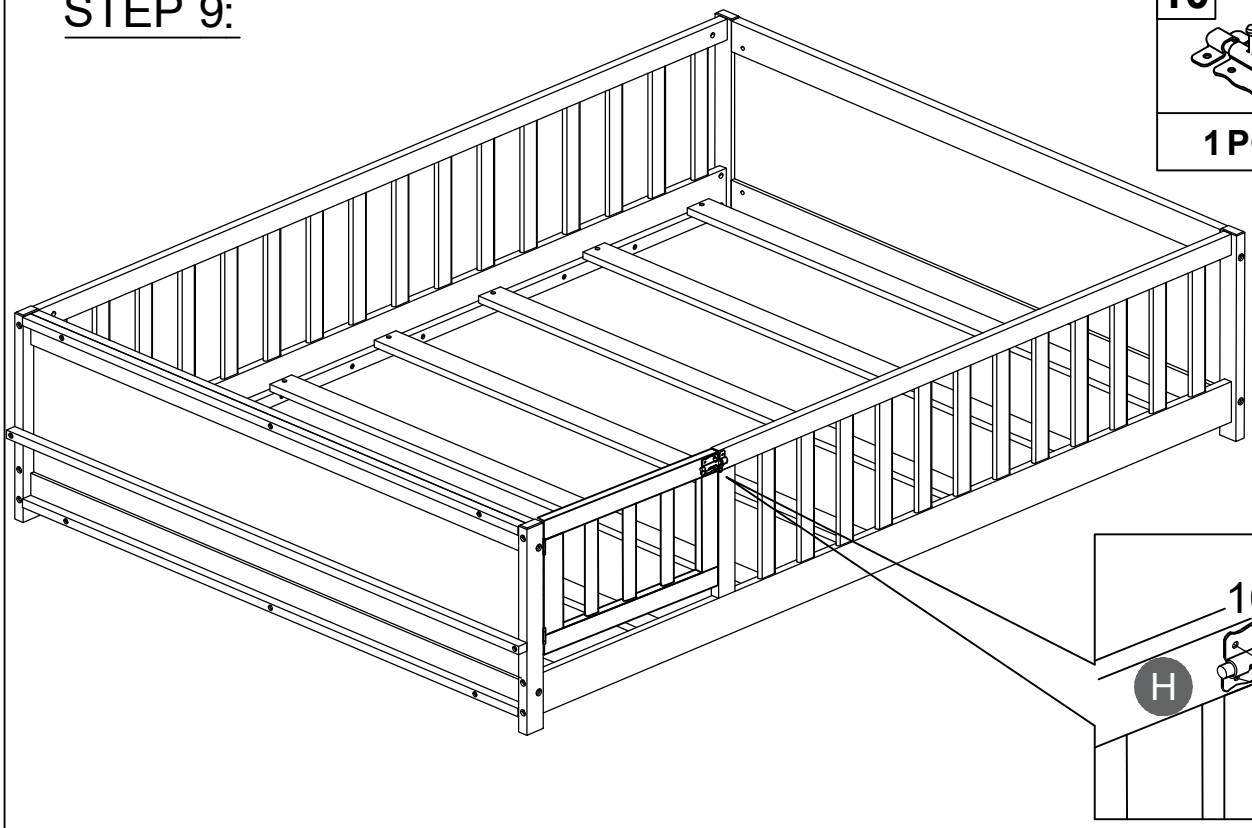

STEP 10:

6	7
1PCS	14PCS

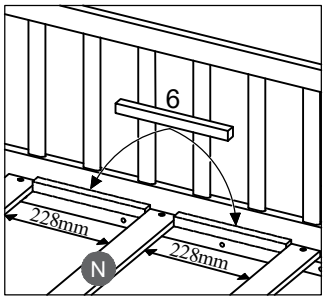

Note: Use Wood Block as a guidance distance between Bed Slats.

Note: Do not lock the screws of the bed slats to the outermost edge of the bed slats, you need to leave a certain space at the edges, otherwise it will cause the board to break. Do not lock the bed slats on the edge of the wood, please hold firmly before screwing, hold it in place with one hand, then lock the screw.