PRODUCT SPECIFICATION

Model: QTWS-880

Series	Quartz QT Series
Material	80% quartz / 20% acrylic resin
Installation Type	Top mount / Drop-in
Configuration	Double equal bowl workstation
Finish	Matte finish
Overall Dimensions	33" x 22" X 9 3/4"
Bowl Dimensions	14 3/8" x 15 3/4" x 9"
Drain Size	3 1/2"
Colors Available	Bisque, Concrete, White, Black, Grey, Brown and Linen
Minimum cabinet size	36"
Template Included	Yes
Clips Included	Yes
Heat Safe	Up to 535°F
Resistant to	Stain, scratch, abrasion, impact
Drain Location	Rear
Accessories Included	Strainer (x2), Cutting board, Colander, drying rack, Bottom grid (x2) and Luster Pro oil

Shown in Black





ACCESSORY
Strainer - L-2 x2
Bottom Grid - GR-6024 x2
Drying Rack - DR1713
Cutting Board - CB1711BW
Colander - COL175SS
Luster Pro oil

Stocked Color Options

- BISQUE - BI
- CONCRETE - CN
- WHITE -WH
- BLACK - BL
- GREY - GR
- BROWN - BR
- LINEN - LN

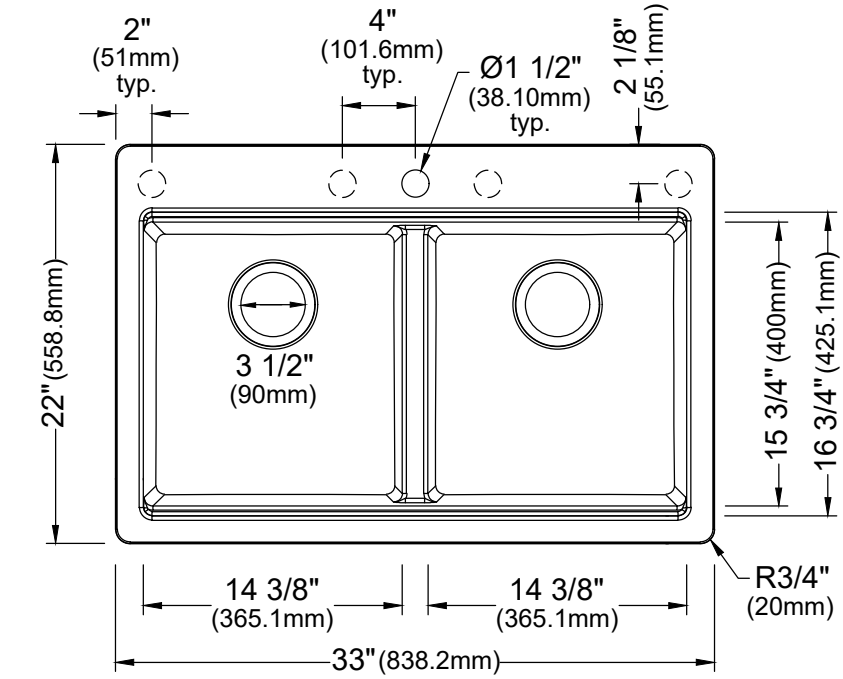

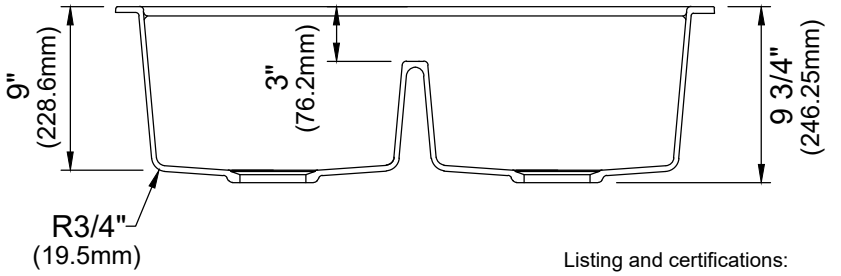

◯ = pre-drilled faucet / drain hole

◌ = semi-drilled knock-out location(s)

Listing and certifications: cUPC

Limited lifetime warranty

We reserve the right to update product specifications without notice. Please visit karran.com for the most current specification sheets. All dimensions are accurate to 1/4". REV 09-2026