STANDARD MOUNTING PLATE INSTALLATION INSTRUCTIONS

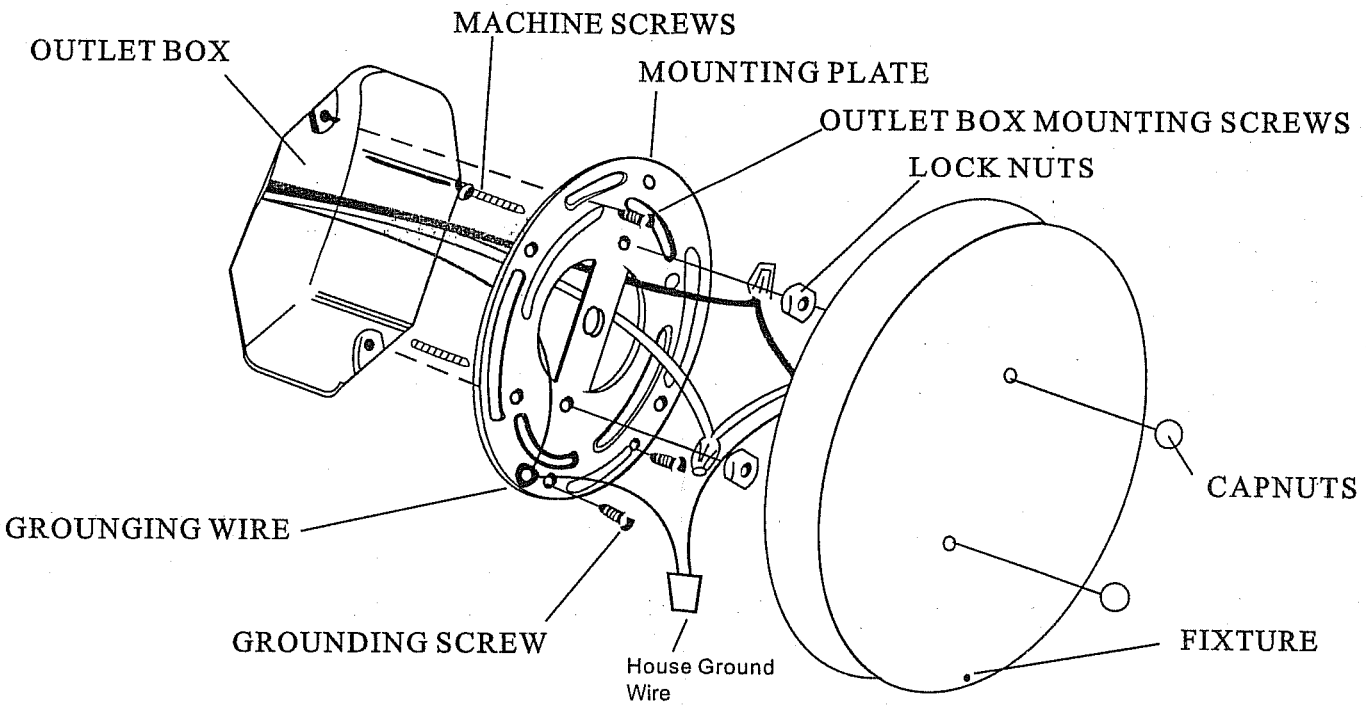

CAUTION: DISCONNECT POWER DURING INSTALLATION

1.) If you are replacing an existing fixture, disconnect and remove the old fixture. Expose the supply wiring from the outlet box.

2.) Thread the machine screws into the opposite side of the mounting plate from the green ground screw. lock the machine screws into place with lock nuts.

3). Fasten the mounting plate to the outlet box using the two screws supplied with the outlet box.

4) Spread the electrical wires so that the black wires are on one side of the outlet box and the white wires are on the other side.

5). Grounding instructions:

On fixtures where mounting plate is provided with a green ground wire attached. Connect mounting plate ground wire to ground wire from outlet box with wire connector (not provided)

If fixture is provided with ground wire. Connect fixture ground wire to ground wire. from outlet box with wire connector (not provided). After following the above steps. Never connect ground wire to black or white power supply wires,

6.) To make electrical connections: Connect the White wire (s) from the fixture to the white wire of the outlet box Connect the black wire(s) from the fixture to the black wire of the outlet box. NOTE; Black outlet box wire may be red , round & smooth and /or have copper conductor. White outlet box wire may be square & ridged and / or have a silver conductor.

7.) Place fixture against mounting surface allowing the machine screws to pass through the fixture cover plate. Secure with cap nuts.