TEAR SHEET

Halo 19" Fabric Hanging Shade

Item # BBL 5289SB-SP



Designer: Barbara Barry

O/A Height: 25" - 119"
Fixture Height: 10.25"
Width: 19"
Canopy: 5" Round
Finishes: PN, SB
Shade Treatments: SP
Socket: 2 - E26 Keyless
Wattage: 2 - 15 LED A19
Weight: 9 Pounds
Note: 120V Configuration Only | Height Not Adjustable After Installatic

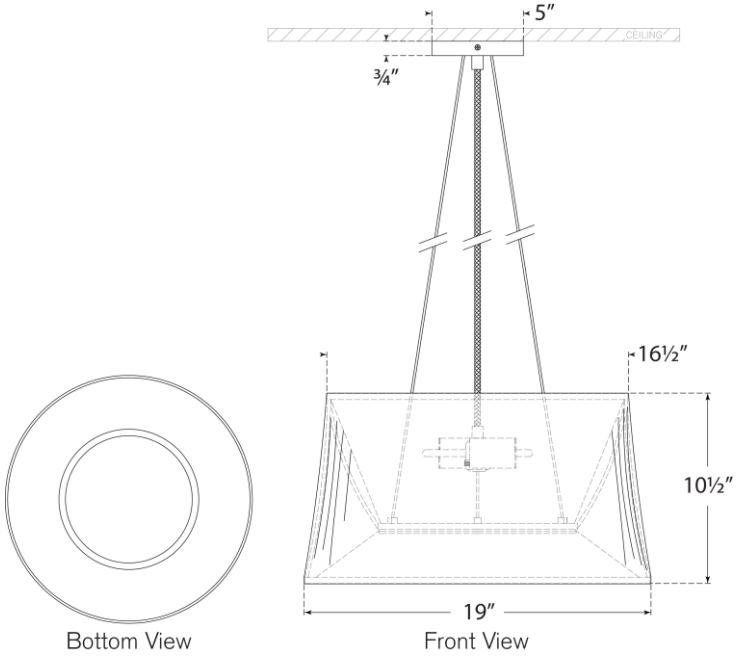

VISUAL COMFORT & CO.