Assembly Instructions

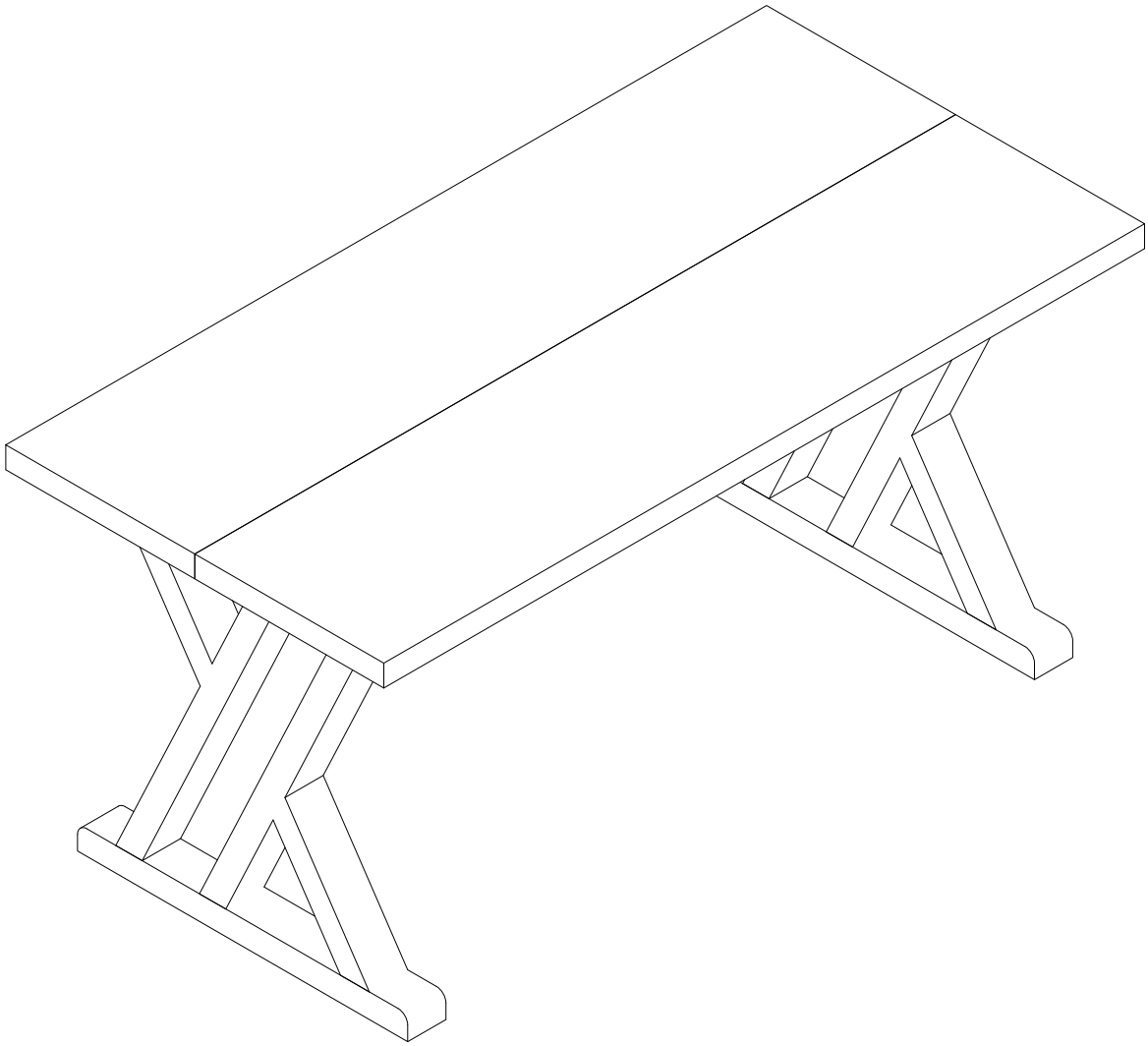

Dining Table

Model No.
HOGA-F2446

Contact Us

We're here to help you.

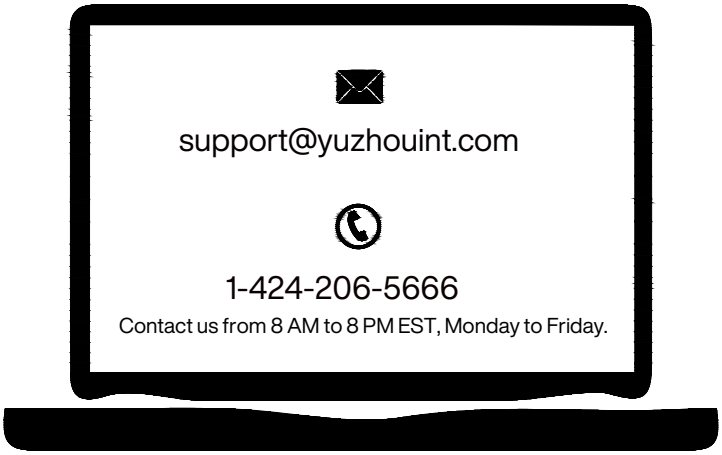

Your satisfaction is our top priority. If you encounter any issues with this product, such as missing or damaged parts, we're here to help. Please retain the original packaging and take photos of the packaging and the product, then contact us as soon as possible.

Warm Tips

1. Carefully read these instructions and keep them for future reference.
2. Check the parts list and confirm everything's there before starting assembly.
3. When assembling, put all parts on a soft, smooth surface like a carpet to avoid scratches.
4. Don't fully tighten screws until all parts are confirmed in place to avoid misalignment.

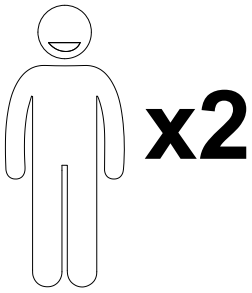

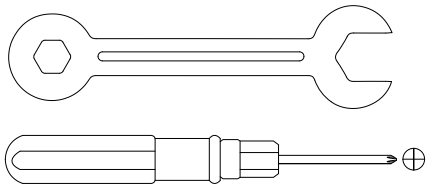

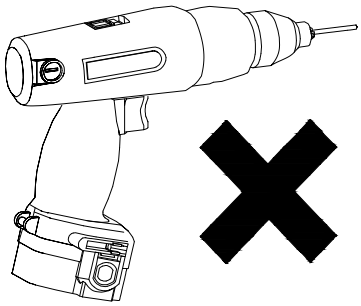

We recommend using hand tools for assembly.

If an electric screwdriver is used, reduce power and torque to avoid damage to the product.

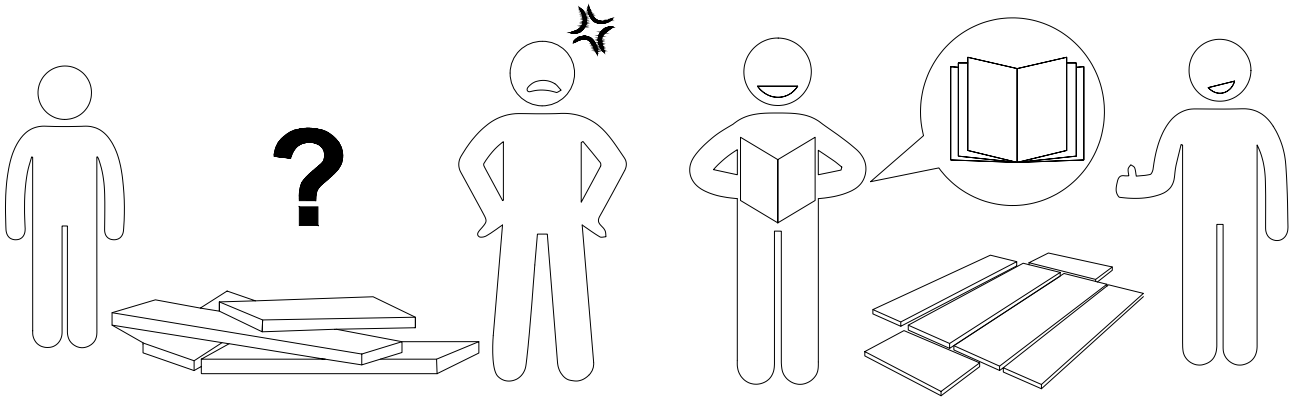

AVOID SCRATCHES

In order to avoid scratching this furnuture should be assembled on a soft layer-could be a rug.

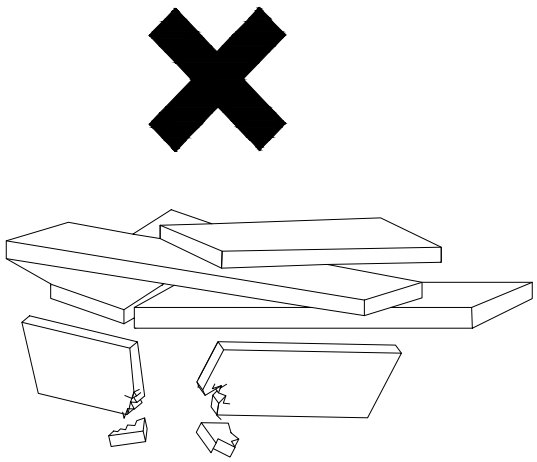

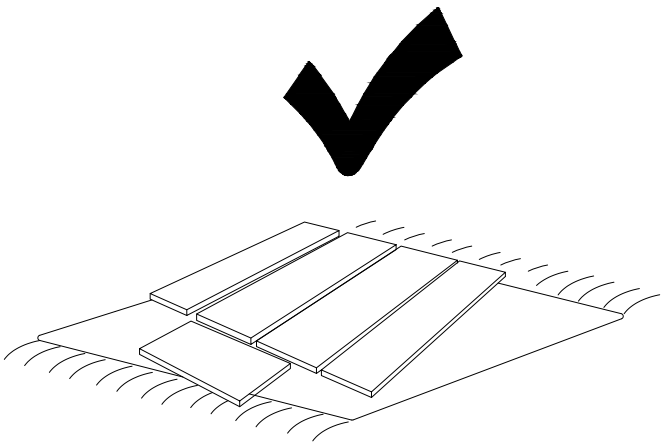

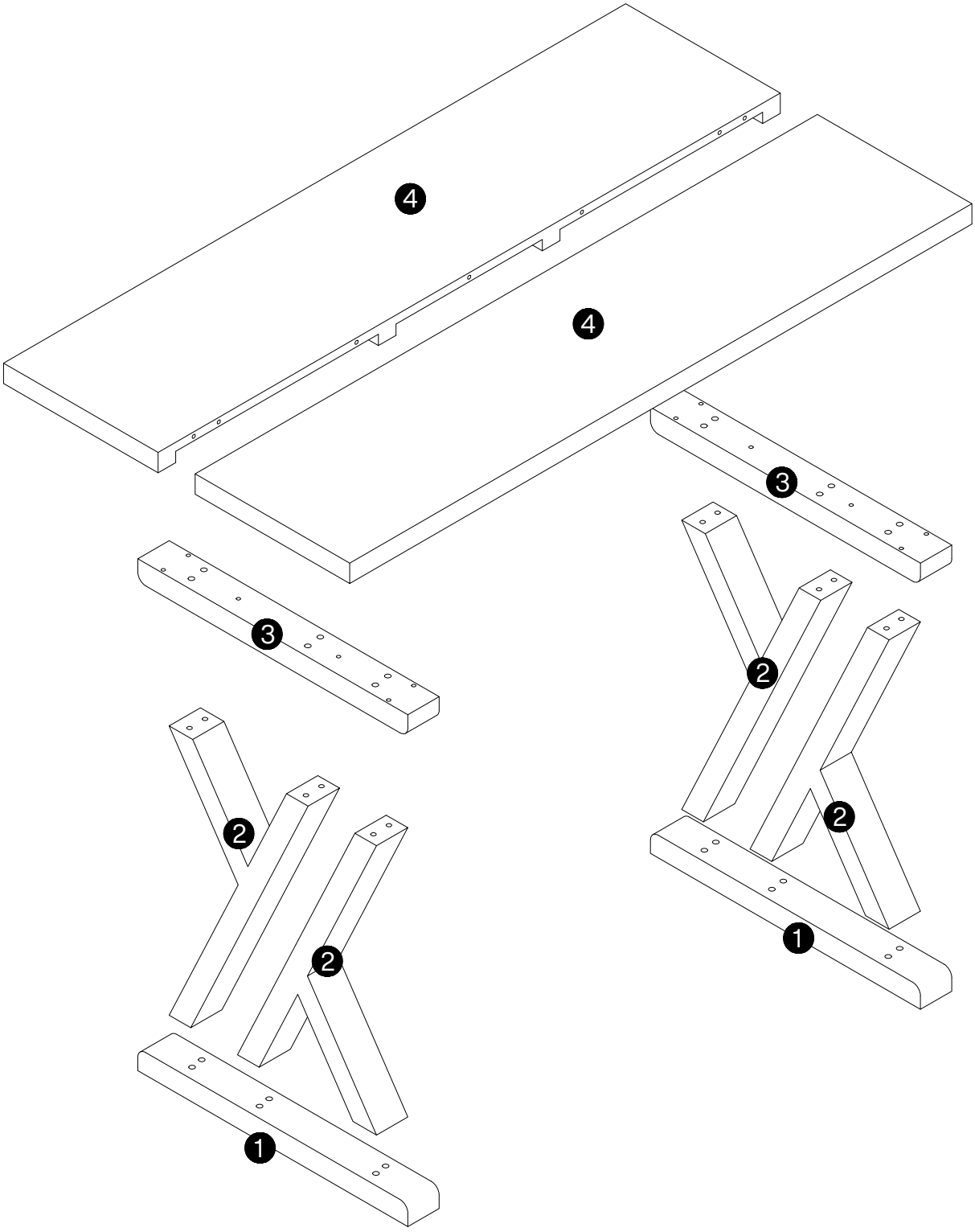

⚠ Caution

Make sure all parts are included. Most board parts are labeled or stamped on the raw edge.
Contact us for a free replacement if you encounter any damaged or missing parts.

Parts List

❶ 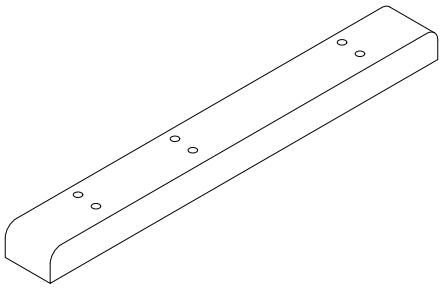 2 pcs	❷ 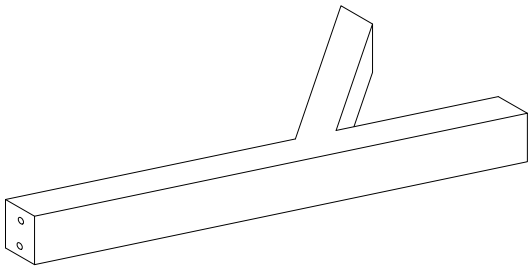 4 pcs
❸ 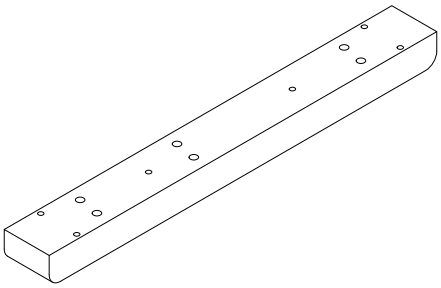 2 pcs	❹ 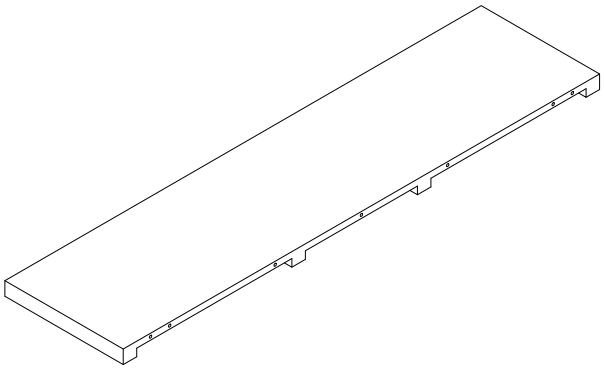 2 pcs

Hardware List

A	B	C	D	E	F	G
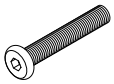 M8x65mm	 M8	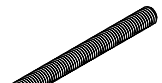 Ø8x80mm	 M8	 M8	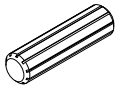 Ø8x30mm	
36+1 pcs	36+1 pcs	3+1 pcs	6+1 pcs	6+1 pcs	4+1 pcs	4+1 pcs

H	I					
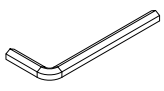 M5	 Wrench M8					
1 pc	2 pcs					

1

A	B
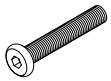	
M8x65mm	M8
24 pcs	24 pcs

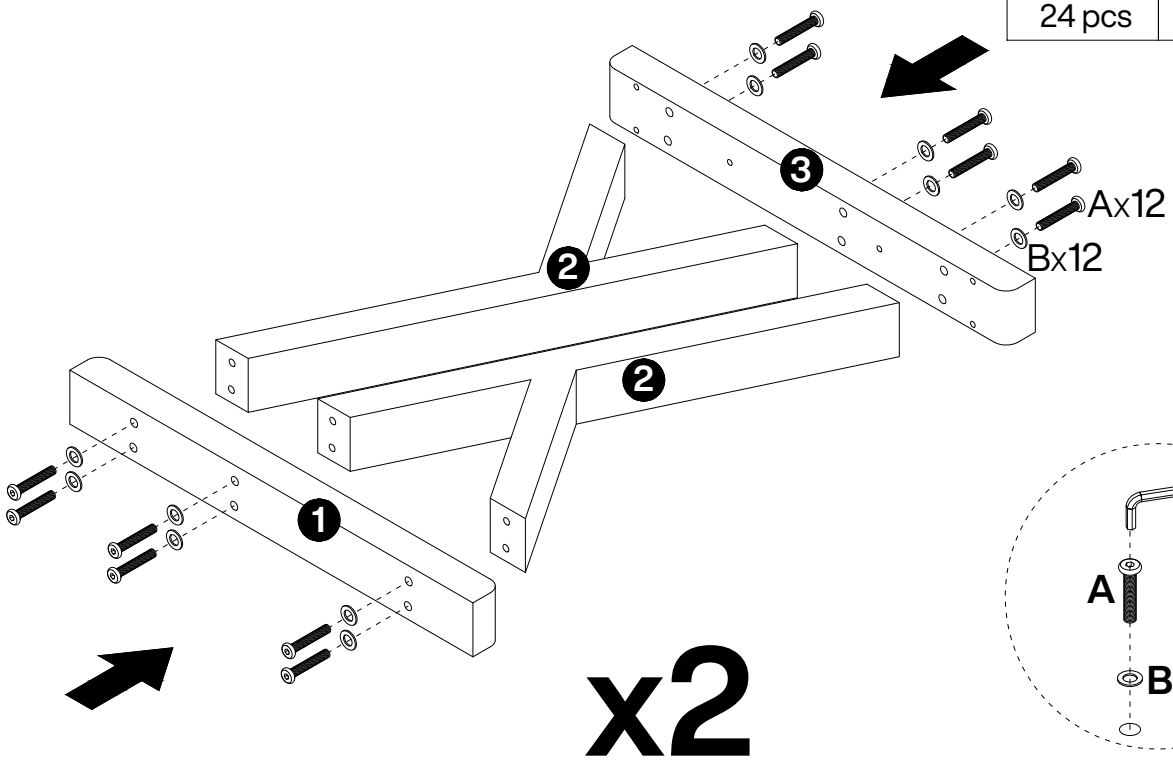

x2

2

F	C	D	E
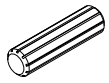			
Ø8x30mm	Ø8x80mm	M8	M8
4 pcs	3 pcs	6 pcs	6 pcs

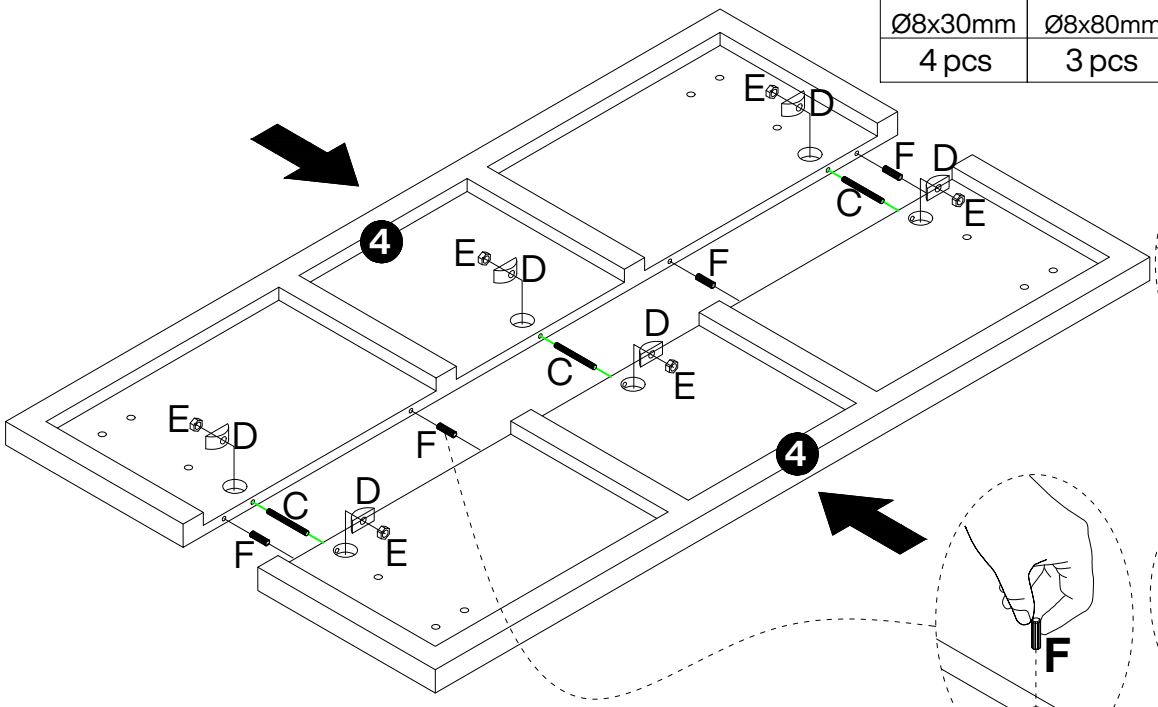

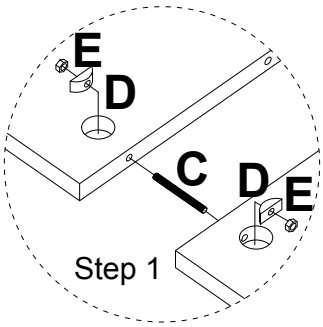

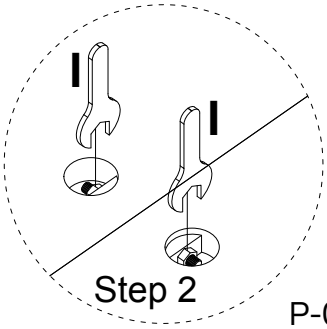

3

A	B
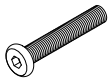 M8x65mm	 M8
12 pcs	12 pcs

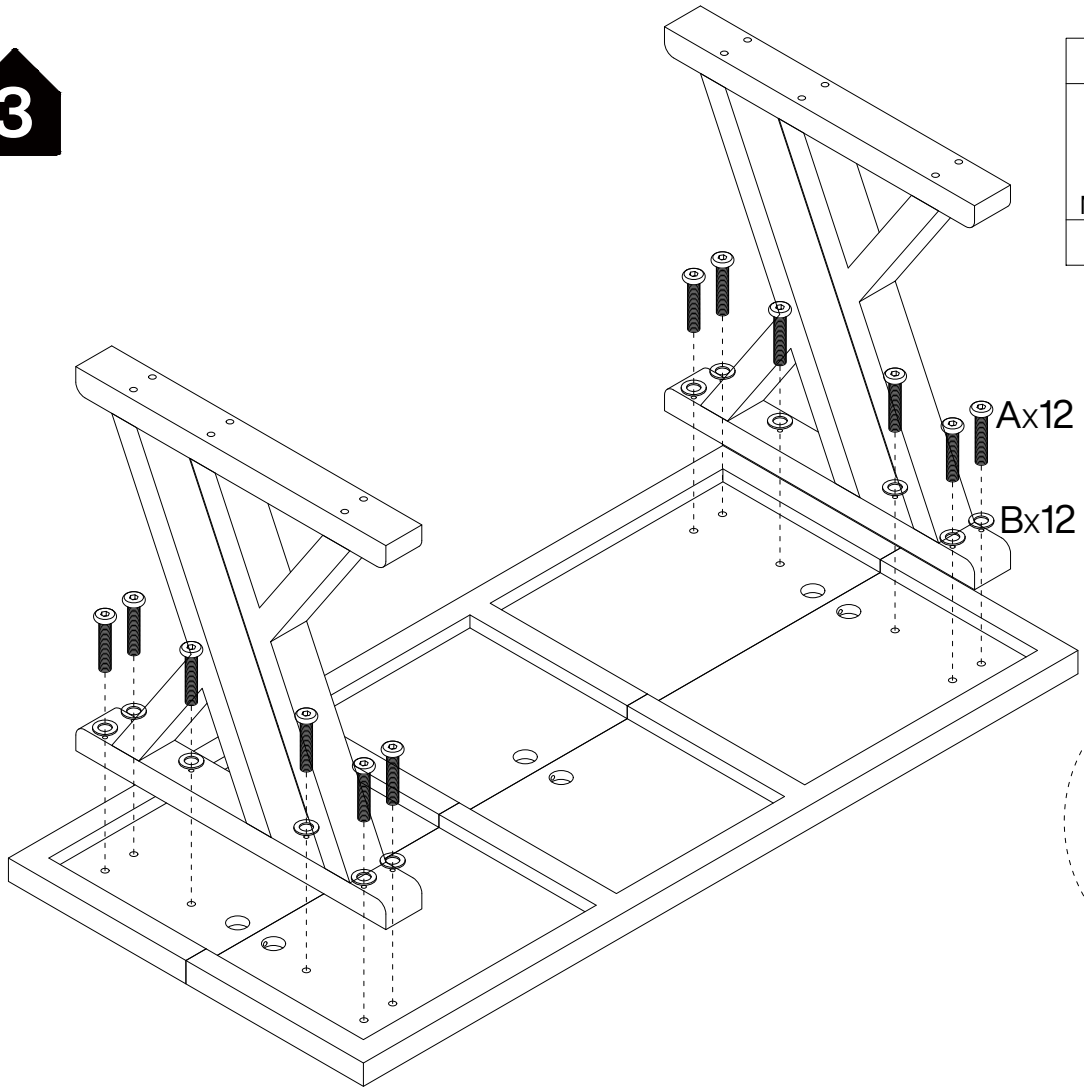

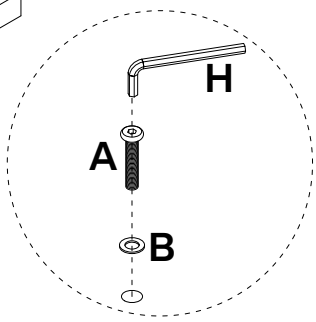

4

G

4 pcs

⚠ Caution! Tap lightly

5

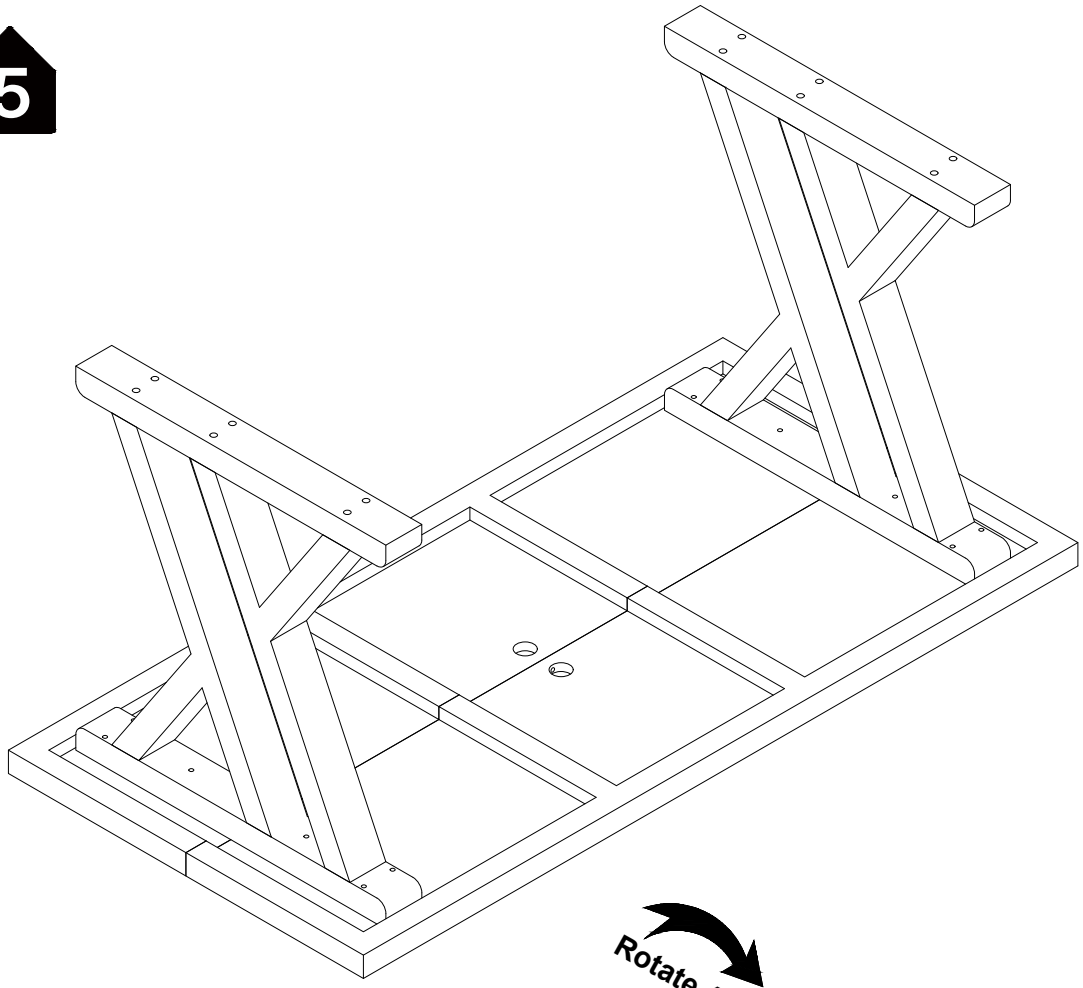



Thank you for your support!

