PRODUCT DATA SHEET

STYLE: (BED)
STYLE: (RAILS)
DESC. BED

DOMESTIC -
IMPORT X

VENDOR INFORMATION:
LOCATION VIETNAM
NUMBER

HARDWARE NEEDED?
X
-

ISSUE D

FINISH(S): ESPRESSO

TYPE OF WOOD: MANGO (HDBD/FTBD/POST AND BOTTOM RAIL)
PINE (CENTER SUPPORT/SLATS AND SUPPORT LEGS)
TYPE OF MATERIAL: PLYWOOD (SIDE RAILS) WITH VENEER

STEP FINISH(S): STEP 1–STAIN STEP 2–BASE COAT STEP 3–SANDING STEP 4–GLAZE
STEP 5–BASE COAT STEP 6–SANDING STEP 7–STAIN STEP 8–LACQUER

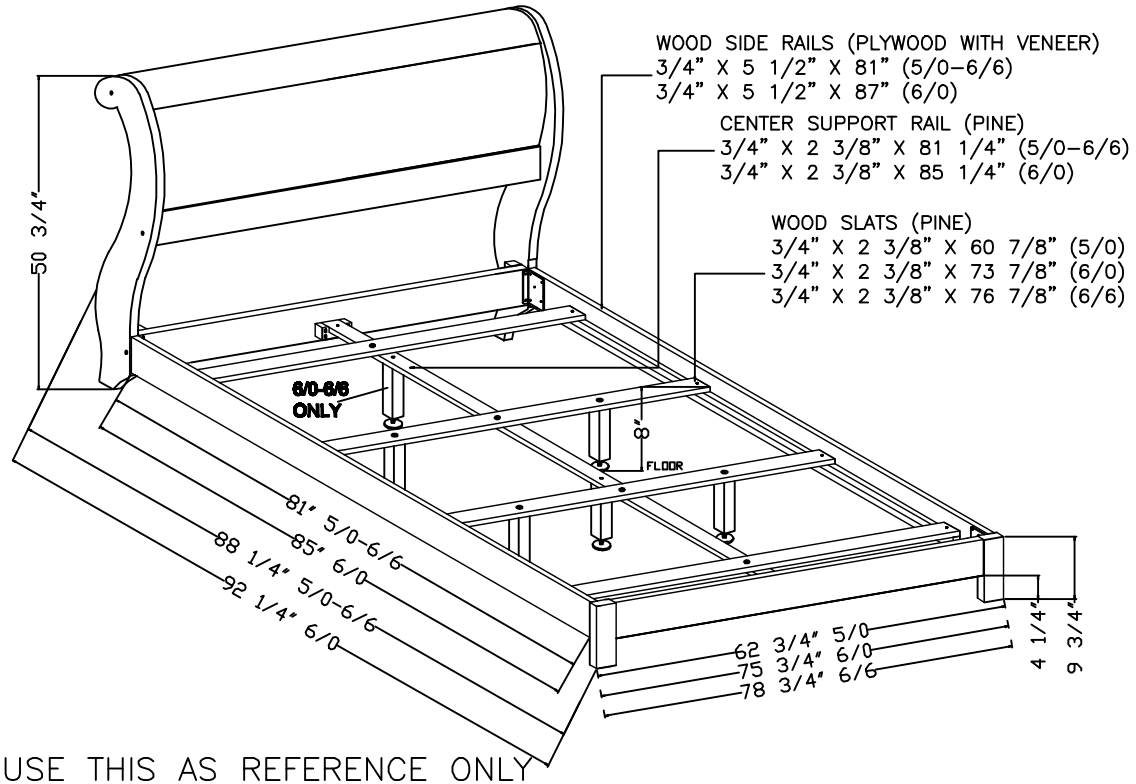

USE THIS AS REFERENCE ONLY

#	DESCRIPTION
–	HARDWARE BAG FOR 5/0
1	(8) 10MM X 50MM WOOD DOWEL
2	(14) 1/4–20 X 1 1/2" FLAT ALLEN HEAD S.
3	(16) 1/4"ID X 5/8"OD FLAT METAL WASHER
4	(8) 1/4–20 X 3/4" FLAT ALLEN HEAD S.
5	(10) #4 X 1 3/8" PHILLIPS HEAD WOOD S.
6	(1) ALLEN WRENCH
17	(2) PHILLIPS HAED WOOD SCREW
–	–
–	–
–	–
–	HARDWARE BAG FOR 6/6–6/0
1	(8) 10MM X 50MM WOOD DOWEL
2	(16) 1/4–20 X 1 1/2" FLAT ALLEN HEAD S.
3	(18) 1/4"ID X 5/8"OD FLAT METAL WASHER
4	(8) 1/4–20 X 3/4" FLAT ALLEN HEAD S.
5	(10) #4 X 1 3/8" PHILLIPS HEAD WOOD S.
6	(1) ALLEN WRENCH
17	(2) PHILLIPS HAED WOOD SCREW
–	–
–	–
–	–
–	SUPPORT LEG# (5 3/4" LONG)
–	NOTE: WITH OUT ADJUSTABLE GLIDE
–	(4) 5/0 (6) 6/6–6/0

ISU	REVISION
B	ADDING CARTON INFORMATION
C	ADDING PHILLIPS WOOD SCREW
D	SHORT SIDE RAIL BY 2 INCHES

	HEIGHT	HEIGHT	WHIDT	WHIDT	DEPTH	WEIGHT (LBS.) PACKED		#OF CTNS		CARTON DIM'S		CU FT.		U.P.S.	
SIZE	HDBD	FTBD	HDBD	FTBD	BED	BED	RAILS	BED	HDBD	BED (HDBD/FTBD/SLATS)	SIDE RAILS/C.SUPPORT	BED	RAILS	Y	N
3/3	–	–	–	–	–	–	–	–	–	–	–	–	–	–	–
4/6	–	–	–	–	–	–	–	–	–	–	–	–	–	–	–
5/0	50 3/4	9 3/4	62 3/4	62 3/4	88 1/4	64	23	2	–	66 1/2 X 30 1/4 X 7 1/2	84 3/4 X 9 1/4 X 3 3/4	8.731	1.701	–	X
6/6	50 3/4	9 3/4	78 3/4	78 3/4	88 1/4	79	23	2	–	82 3/4 X 30 1/4 X 7 1/2	84 3/4 X 9 1/4 X 3 3/4	10.86	1.701	–	X
6/0	50 3/4	9 3/4	75 3/4	75 3/4	94 1/4	77	25	2	–	80 X 29 1/2 X 7 1/4	88 3/4 X 10 X 3 3/4	9.901	1.925	–	X
–	–	–	–	–	–	–	–	–	–	–	–	–	–	–	–