CANEST®

Model: FC-001P
CT-001P

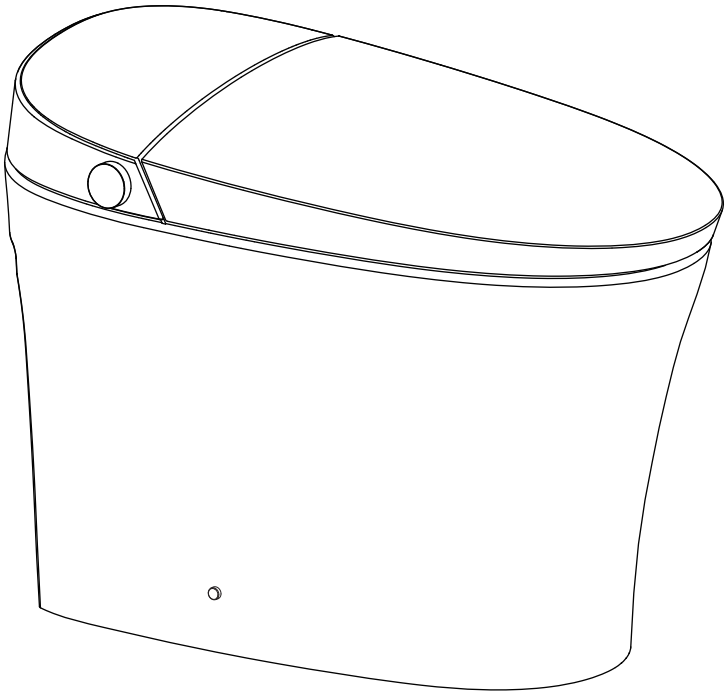

Installation Manual

- Thank you for choosing our products. Please read the instructions carefully before installation and keep it available for future maintenance or reference.

Get free technical support for the lifetime of your product.
Email: service@canesthome.com
Phone: 1-702-824-3195

Content

Installation

Safety instructions — 01

Technical specification — 05

List of materials — 07

Technical drawing — 08

Parts identification — 09

Toilet installation — 10

Preparation — 12

Maintenance

Maintenance — 13
1. Main unit care and maintenance
2. Spray nozzle maintenance and care
3. Filter maintenance

Emergency troubleshooting — 14
1. Power and water failure
2. Product unused for a period of time
3. Failure of remote control
4. Replace the flushing battery

Others

Description of the knob function — 16

LED display description — 17

Troubleshooting guide — 18

IMPORTANT SAFEGUARDS

When using electrical products, especially when children are present, basic safety precautions should always be followed, including the following:

1. The appliance is not to be used by persons (including children) with reduced physical, sensory or mental capabilities, or lack of experience and knowledge, unless they have been given supervision or instruction.
2. This appliance can be used by children aged from 8 years and above and persons with reduced physical, sensory or mental capabilities or lack of experience and knowledge if they have been given supervision or instruction concerning use of the appliance in a safe way and understand the hazards involved.
3. Children shall not play with the appliance.
4. Cleaning and user maintenance shall not be made by children without supervision.

READ ALL INSTRUCTIONS BEFORE USING

DANGER – To reduce the risk of electrocution:

1. Do not use while bathing.
2. Do not place or store product where it can fall or be pulled into a tub or sink.
3. Do not place in or drop into water or other liquid.
4. Do not reach for a product that has fallen into water. Unplug immediately.
5. Do not wash the main unit or electrical plug with water or detergent.
6. Do not handle the electrical plug with wet hands.
7. Never block the outlet of the air dryer.
8. Never disassemble, repair or modify this product.
9. During installation, disassembly, repair and maintenance of the product, the power plug must be switched off and water supply be shut off.

***DANGER** – Réduire le risque d'électrocution:*

1. Ne pas utiliser pendant le bain.
2. Ne pas placer ou stocker le produit dans un endroit où il pourrait tomber ou être tiré dans une baignoire ou un évier.
3. Ne pas placer ou laisser tomber le produit dans l'eau ou tout autre liquide.
4. Ne tendez pas la main pour obtenir le produit tombé dans l'eau. Débranchez immédiatement la prise.
5. Ne lavez pas l'unité principale ou les prises électriques avec de l'eau ou des détergents.
6. Ne pas manipuler la prise électrique avec les mains mouillées.
7. Ne jamais obstruer la sortie du sécheur d'air.
8. Ne jamais démonter, réparer ou modifier ce produit.
9. À l'occasion de l'installation, du démontage, de la réparation et de l'entretien du produit, la prise de courant doit être coupée et l'alimentation en eau doit être interrompue.

WARNING – To reduce the risk of burns, electrocution, fire, or injury to persons.

1. Close supervision is necessary when this product is used by, on, or near children or individuals with disabilities.
2. Use this product only for its intended use as described in this manual. Do not use attachments not recommended by the manufacturer.
3. Never operate this product if it has a damaged cord or plug, if it is not working properly, if it has been dropped or damaged, or dropped into water. Return the product to a service center for examination and repair.

4. Keep the cord away from heated surfaces.
5. Never use while sleeping or drowsy.
6. Never drop or insert any object into any opening or hose.
7. Do not use outdoors or operate where aerosol (spray) products are being used or where oxygen is being administered.
8. Connect this product to a properly grounded outlet only. See Grounding Instructions.
9. Do not throw cigarettes and other burning materials into toilet, otherwise it might cause fire.
10. This product is an electric appliance, so it must be placed far away from water and other liquid.
11. Do not lay the product on its side or upside down during the electrical circuit.
12. It is prohibited to use other electric appliances in the same socket.
13. It is forbidden to use the power extension or unstable loose outlet.
14. Do not reuse any existing water supply hoses, otherwise it might cause leakage, fire or electrical shock. Installation should include specified components and a new water supply hose.

AVERTISSEMENT – *Pour réduire les risques de brûlure, d'électrocution, d'incendie ou de blessure.*

1. Ce produit doit être surveillé de près lorsqu'il est utilisé par, sur ou à proximité d'enfants ou de personnes handicapées.
2. N'utilisez ce produit que pour l'usage auquel il est destiné, tel qu'il est décrit dans ce manuel. N'utilisez pas d'accessoires non recommandés par le fabricant.
3. N'utilisez jamais ce produit si le cordon ou la fiche est endommagé, ne fonctionne pas correctement, tombe ou est endommagé, ou tombe dans l'eau. Retourner le produit au centre de service pour inspection et réparation.
4. Gardez le cordon loin des surfaces chaudes.
5. Ne jamais utiliser pendant le sommeil ou la somnolence.
6. Ne laissez jamais tomber ou n'insérez jamais d'objet dans une ouverture ou un tuyau.
7. Ne pas utiliser à l'extérieur ou dans des endroits où des aérosols (sprays) ou de l'oxygène sont utilisés.
8. Connectez ce produit uniquement aux prises correctement mises à la terre. Voir les instructions de mise à la terre.
9. Ne jetez pas de cigarettes et autres substances brûlées dans les toilettes, sinon cela pourrait provoquer un incendie.
10. Ce produit est un appareil électrique et doit donc être placé loin de l'eau et d'autres liquides.
11. Dans le circuit, ne pas allonger le produit sur le côté ou à l'envers.
12. L'utilisation d'autres appareils électriques dans la même prise est interdite.
13. Il est interdit d'utiliser des rallonges d'alimentation ou des prises lâches instables.
14. Ne réutilisez pas les tuyaux d'alimentation existants, car ils pourraient provoquer une fuite, un incendie ou une électrocution. L'installation doit inclure les composants spécifiés et un nouveau tuyau d'alimentation en eau.

IMPORTANT SAFETY INSTRUCTIONS

CAUTION – Indicates that failure to follow the instruction may cause body injury or property damage.

1. Do not install or use the product in wet places as steam room etc.
2. It is recommended to use water-proof electrical outlet which should be installed in a place where is not easily to get wet.
3. This product should be used with 110V-120V, 60Hz electrical current only, load current is at least 15A. Power plug must be equipped with ground fault circuit interrupter or ground fault electrical leakage protector or similar high sensitive, rapid type leakage switch (Rated sensitive current under 6mA).
4. When it thunders, it is strongly recommended to pull out the power plug.
5. Do not stand on ceramic toilet.
6. Ceramic toilet must install floor fixing bolts.
7. Do not stand on product unit, seat and lid.
8. Do not lean against the seat lid when using the product, to avoid damage.
9. This product is equipped with a soft-closing seat lid. Do not press the toilet seat closed, or damage may occur.
10. Do not use any caustic chemicals or scrubbing brush to clean this product.
11. Exposure to direct sunlight is prohibited.
12. Only use tap water or potable water, otherwise it may cause skin inflammation.
13. Do not connect water supply to heater outlet. Make sure inlet water temperature is between 3~35°C/37.4~95°F.
14. When the room temperature is under zero degree, please drain the water tank, to avoid freezing.
15. Raise room temperature to prevent the toilet from damage due to freezing.
16. When moving the product from cold or wet environment into normal room temperature, wait for 2 hours until the condensation water is fully volatilized. Doing so can prevent the product from electrical short-circuit.
17. When not using the product over three(3) days, drain the water out of the toilet and pull the electrical plug from the wall outlet.
18. Stop using the product and shut off the power when product malfunctions. Call for professional service.

ATTENTION – *Indique que le non-respect de l'instruction peut entraîner des blessures corporelles ou des dommages matériels.*

1. N'installez pas ou n'utilisez pas le produit dans un endroit humide, tel qu'une chambre à vapeur, etc.
2. Il est recommandé d'utiliser une prise de courant étanche, qui doit être installée dans un endroit où elle ne risque pas d'être mouillée.
3. Ce produit doit être utilisé avec un courant électrique de 110V-120V, 60Hz uniquement, le courant de charge étant d'au moins 15A. La fiche d'alimentation doit être munie d'un disjoncteur de défaut de mise à la terre ou d'un protecteur de fuite de défaut de mise à la terre ou d'un interrupteur de fuite de type rapide de haute sensibilité similaire (courant sensible nominal inférieur à 6 ma).
4. En cas de tonnerre, il est fortement recommandé de débrancher la prise électrique.
5. Ne vous tenez pas debout sur les toilettes en céramique.
6. Les toilettes en céramique doivent être équipées de boulons de fixation au sol.
7. Ne pas se tenir debout sur l'unité de produit, le siège et le couvercle.
8. Ne vous appuyez pas sur le couvercle du siège lorsque vous utilisez le produit, afin d'éviter de l'endommager.
9. Le produit est équipé d'un couvercle de siège à fermeture douce. Ne fermez pas le siège de toilette, il pourrait causer des dommages.
10. N'utilisez pas de produits chimiques agressifs ou de brosses pour nettoyer ce produit.

11. L'exposition directe au soleil est interdite.
12. Utilisez uniquement de l'eau du robinet ou de l'eau potable, sinon vous risquez de causer des éraflures.
13. Ne raccordez pas l'alimentation en eau à la sortie de l'appareil de chauffage. S'assurer que la température de l'eau d'entrée est comprise entre 3~35℃/37.4~95℉.
14. Lorsque la température ambiante est inférieure à zéro degré, veuillez vidanger le réservoir d'eau afin d'éviter le gel.
15. Augmentez la température de la pièce pour éviter que les toilettes ne soient endommagées par le givrage.
16. Lorsque le produit passe d'un environnement froid ou humide à une température ambiante normale, attendre 2 heures jusqu'à ce que l'eau de condensation soit entièrement volatilisée. Ce faisant, vous évitez les courts - circuits électriques du produit.
17. Lorsque le produit n'est pas utilisé pendant plus de trois (3) jours, videz l'eau des toilettes et débranchez la prise électrique de la prise murale.
18. Cessez d'utiliser le produit et éteignez l'alimentation lorsque le produit tombe en panne. Appel à un service professionnel.

GROUNDING INSTRUCTIONS

This product should be grounded. In the event of an electrical short circuit, grounding reduces the risk of electric shock by providing an escape wire for the electric current. This product is equipped with a cord having a grounding wire with a grounding plug. The plug must be plugged into an outlet that is properly installed and grounded.

DANGER – Improper use of the grounding plug can result in a risk of electric shock.

If repair or replacement of the cord or plug is necessary, do not connect the grounding wire to either flat blade terminal. The wire with insulation having an outer surface that is green with or without yellow stripes is the grounding wire.
This product is factory equipped with a specific electric cord and plug to permit connection to a proper electric circuit. Make sure that the product is connected to an outlet having the same configuration as the plug. No adapter should be used with this product. Do not modify the plug provided — if it will not fit the outlet, have the proper outlet installed by a qualified electrician. If the product must be reconnected for use on a different type of electric circuit, the reconnection should be made by qualified service personnel.

DANGER - *une mauvaise utilisation de la prise de terre peut entraîner un risque d'électrocution.*

Si vous avez besoin de réparer ou de remplacer un fil ou une fiche, ne connectez pas le câble de mise à la terre à une borne de type lame plate. Les fils avec une couche isolante dont la surface extérieure est verte et avec ou sans bandes jaunes sont des fils de terre.
Ce produit est équipé en usine d'un cordon électrique et d'une fiche spécifiques permettant de le connecter à un circuit électrique approprié. Assurez-vous que le produit est branché sur une prise ayant la même configuration que la fiche. Aucun adaptateur ne doit être utilisé pour ce produit. Ne modifiez pas la fiche fournie — si elle n'est pas adaptée à la prise, faites installer la prise adéquate par un électricien qualifié. Si le produit doit être reconnecté pour être utilisé sur un autre type de circuit, il doit être reconnecté par un personnel de service qualifié.

SAVE THESE INSTRUCTIONS

Technical specification

Main Unit	Rated voltage	110V-120V, 50Hz-60Hz
	Rated power	875W
	Water proof	IPX4
	Power cord length	About 1.5m
Toilet	Flush volume	1.6/1.1Gpf, 6.0L(full flush)/4.1L(half flush)
	Flushing mode	Siphonic jet
	Rough-in	305mm
	Outlet outside diameter	≤100mm
	Drainage method	S-trap
	Water pressure range	0.08MPa-0.8MPa (static pressure)
Cleaning device	Heating mode	Instant
	Heating power	1400W
	Water temperature	6-level adjustment
	Water volume	3-level adjustment
	Cleaning mode	Rear washing / Oscillating washing, Front washing / Oscillating washing
	Nozzle position	5-level adjustment
	Water pressure protector	Pressure maintaining device, Automatic pressure relief device
	Anti-fouling device	Automatic nozzle cleaning, Anti-syphon device, Anti-backflow device, Filter device
	Safety device	Thermal fuse, Water temperature sensor, Thermostat, Over temperature protection, Ground protection, Leakage protection plug
Drying device	Warm air volume	Over 0.2m^3/min
	Warm air temperature	6-level adjustment
	Heating power	200W
	Safety device	Thermal fuse, Leakage protection plug, Thermostat

Deodorization	Deodorization method	Diatom Deodorization
Heated seat	Surface temperature	6-level adjustment
	Heating power	50W
	Open and close device	Quiet soft-close
	Burn protection	After 10 minutes of use, the seat temperature will automatically drop slowly to a low level
	Safety device	Seat sensor, Temperature sensor, Thermal fuse, Thermostat, Leakage protection plug
Caring device	Night light assembly	Intelligent, Always off, Always on
	User ID setting	To avoid interference when used by multiple users
	Foot sensor flushing function	Foot sensor flushing
Antibacterial site	Seat	EPA Registration Number: 73148-8 EPA Est. 101287-CHN-1
	Nozzle	EPA Registration Number: 73148-4 EPA Est. 101287-CHN-1

Rated power: Under the condition of ambient temperature 23°C/73°F, water static pressure 0.18MPa±0.02MPa, water temperature 15°C/59°F, power toilet on, set water pressure, seat temperature, water temperature to the highest level in turn and perform one rear washing cycle.

List of materials

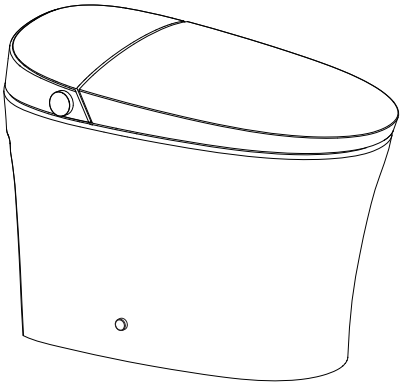

Main Unit

Remote Control Components

Sealing Flange

Installation Cardboard

Installation Manual

Braided Hose
(Installed)

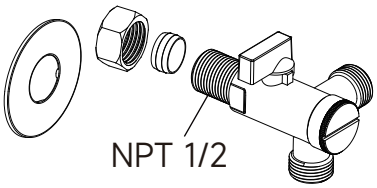

Three Way Angle Valve

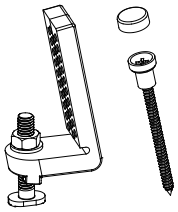

Mounting Kit

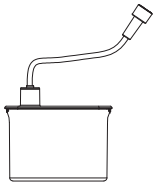

Battery Box

Technical drawing

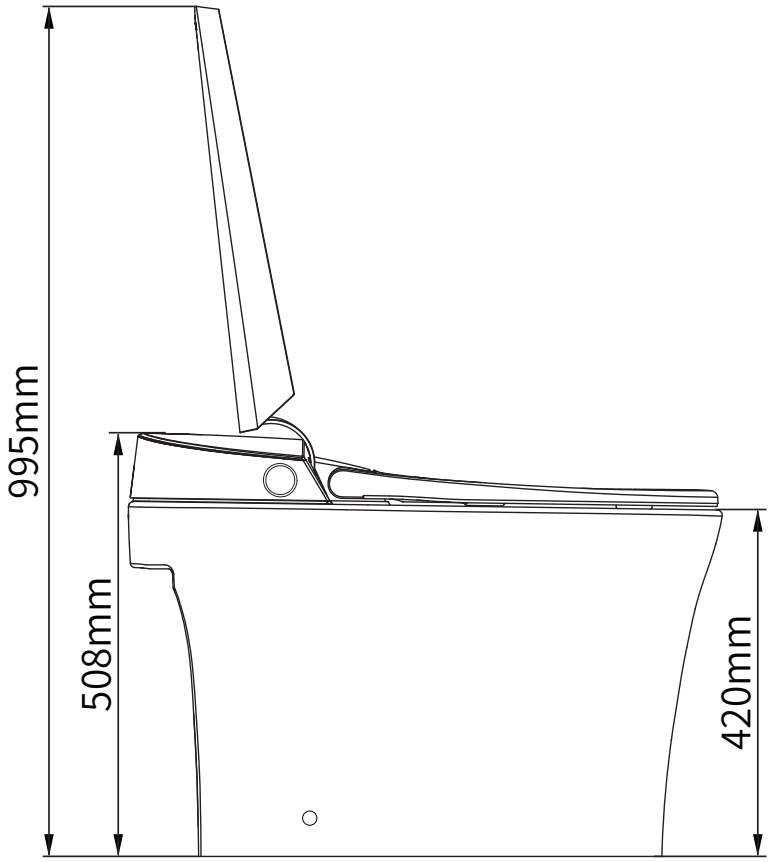

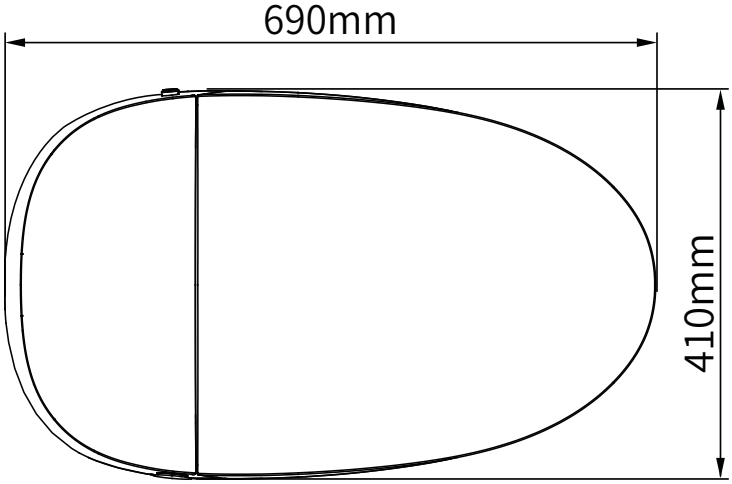

1. The drawing is for reference only, and we reserve the right to modify the product appearance.
2. Product appearance is subject to change in kind.

Parts identification

Left side

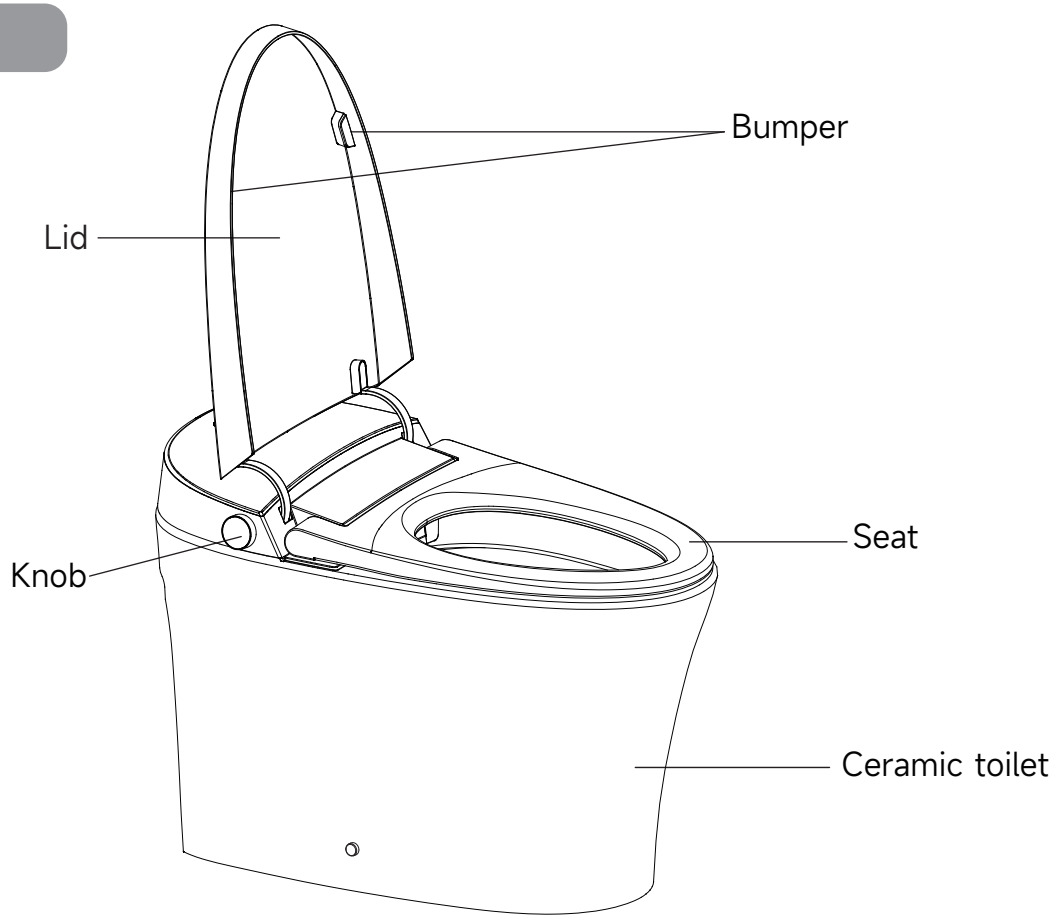

Right side

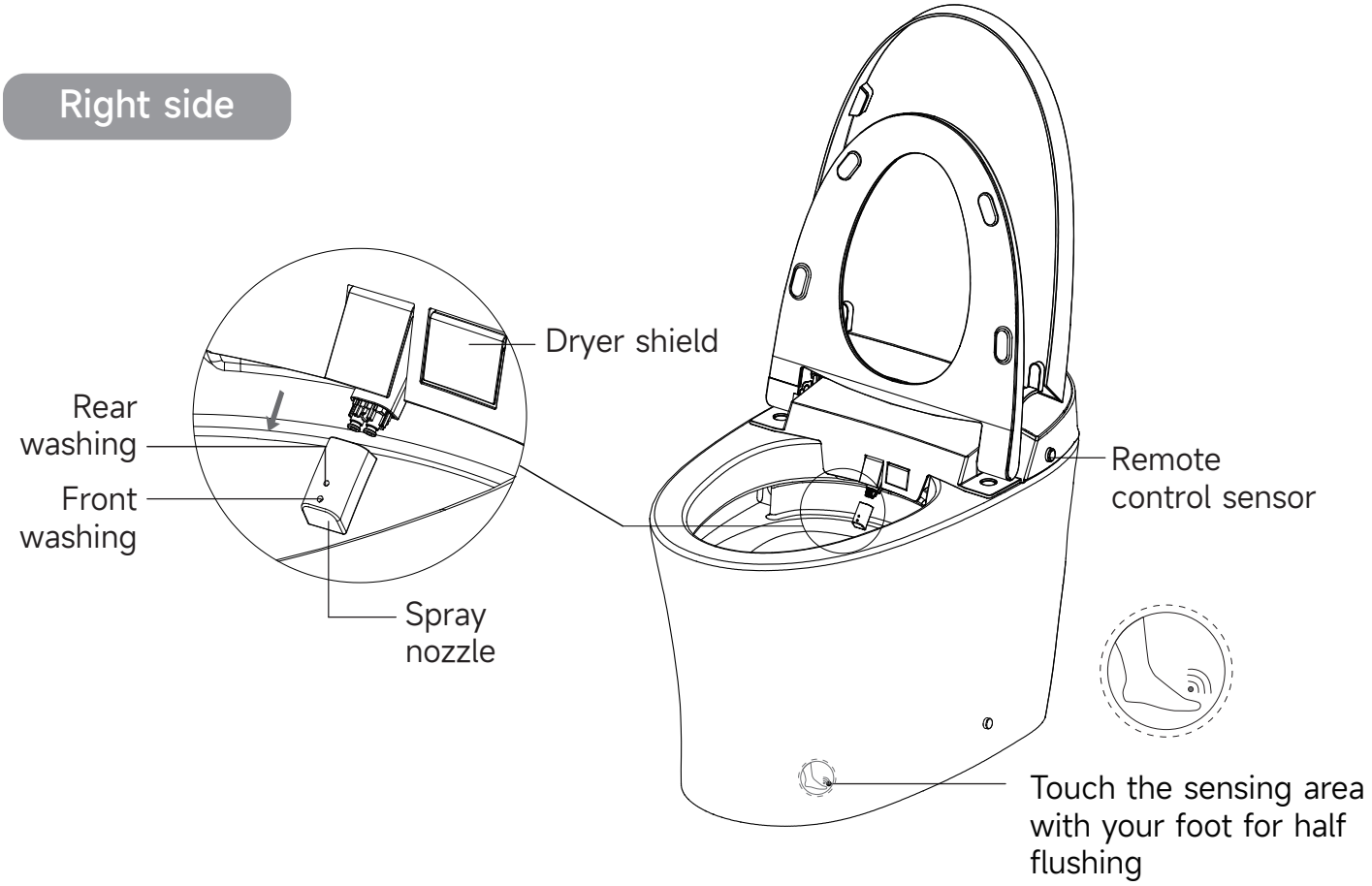

Toilet installation

1. Installation of angle valve

- Draw drain outlet centerline on the floor. Install angle valve at proper position on the wall according to the dimension of toilet.

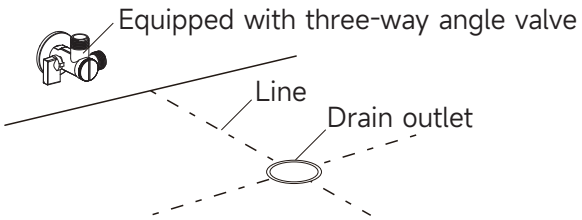

Installation Method 1:

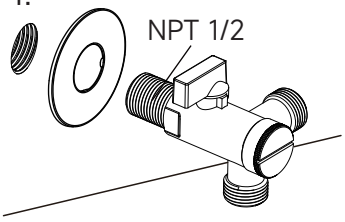

Installation Method 2:

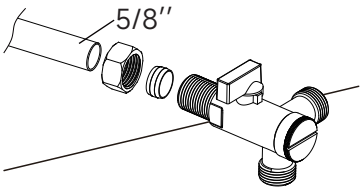

Note:
1. Please use the supplied angle valve when installing this toilet. Use of another angle valve not including a filter may result in blockages in the toilet and bidet waterways.
2. If replacing an existing angle valve, please contact a professional for installation.

2. Cardboard installation

- Align cardboard with the centerline of drain outlet.
- Draw contour line according to cardboard.

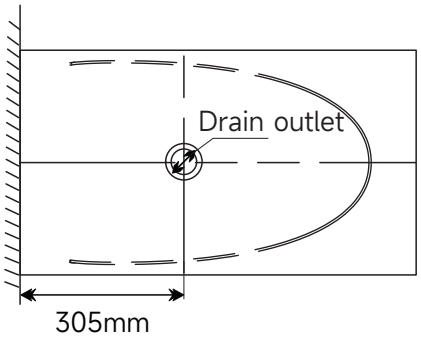

3. Installing the Flushing Battery

1. Remove the male end (red) of the battery connection for seat cover from the rear of ceramic toilet.
2. Connect the battery connection wire at the seat cover end to the female end of the power-off flushing battery box connection wire and tighten them.
3. Place the battery box in a suitable position behind the ceramic. Please ensure it is not placed too deep inside, as it may be difficult to remove for battery replacement in the future.

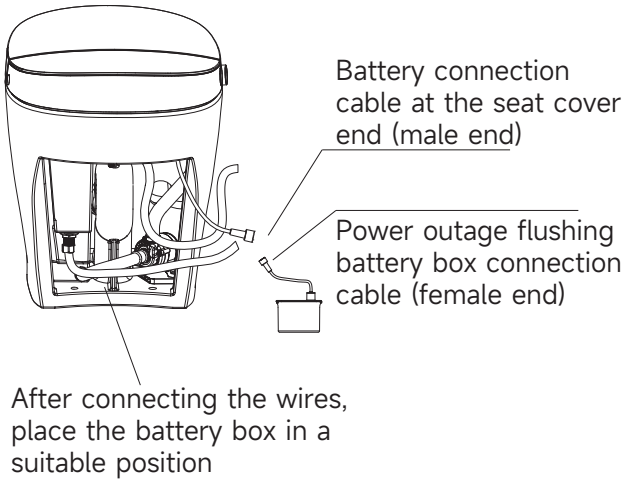

Warm tips:
The male and female terminals of the battery connection have positive and negative poles. There are positioning structures inside the two terminals. Please do not force them to plug in, as this may cause damage to the product.

4. Hose

- Connect the water inlet and angle valve of the toilet with the matching hose and tighten it.

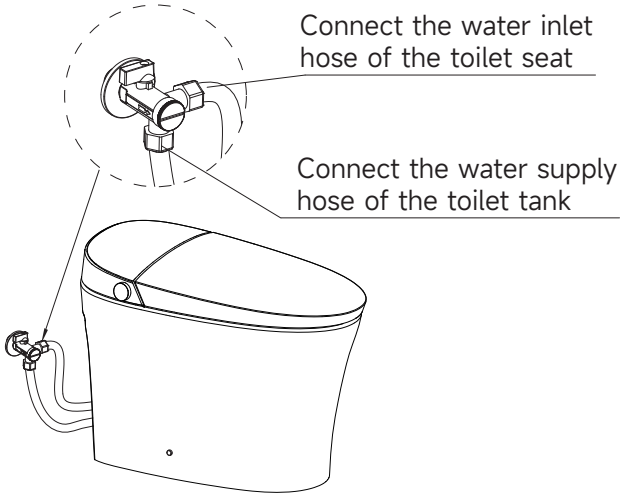

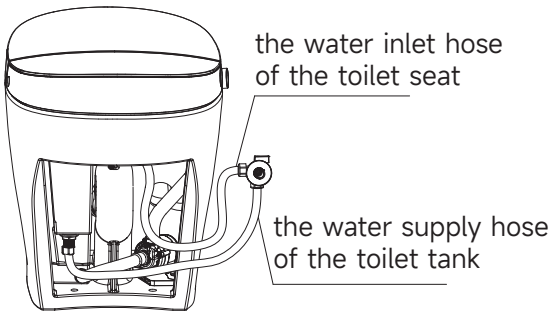

Note:
Please use this supplied water supply hose, to ensure optimal flushing performance.

5. Mounting bracket installation

- Assemble the mounting bracket with bolts and then install them to the pre-installed flange plate on the ground and lock tight with nuts.

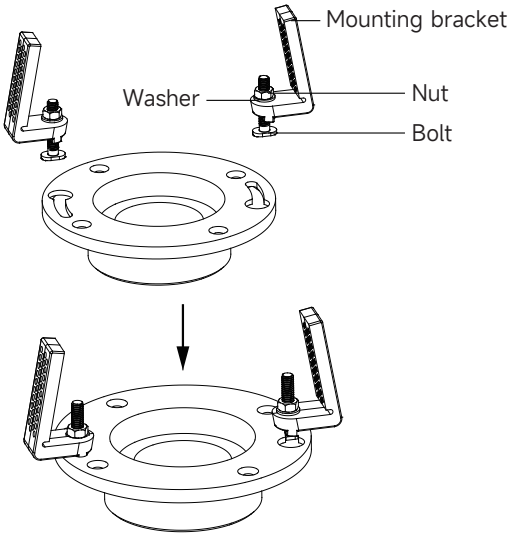

6. Ceramic toilet installation

- Install a sealing flange into drain outlet.
- Install ceramic toilet on the corresponding position.

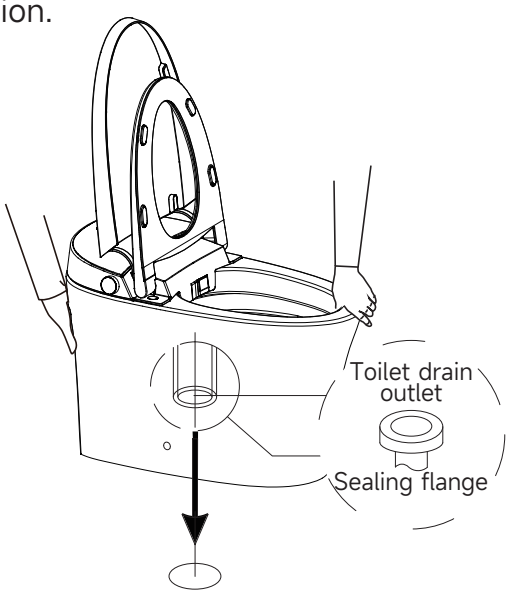

Note:

1. Two people are required to carry the toilet.
2. Please clean up the drain outlet;
3. Please make sure ceramic toilet outlet sits perfectly on drain outlet.

7. Screw installation

- Put the screw through the fixing sleeve and then install it through the holes (on both sides of the ceramic toilet) to the mounting bracket on the ground. Lock tight.
- Install the decorative cap on the fixing sleeve.

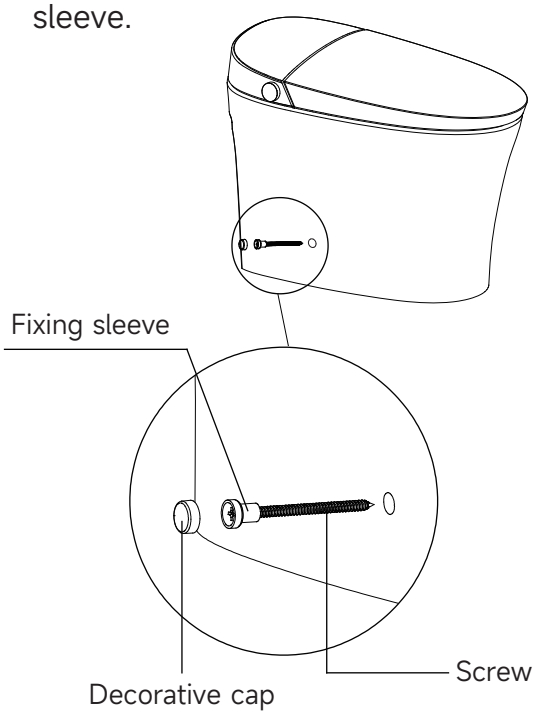

Preparation

1. Turn on the angle valve

- Check the threaded connection for leaks to ensure complete sealing. Turn the angle valve counterclockwise to the full open position.
  (Note: The angle valve opens with a large torque for the first time.)

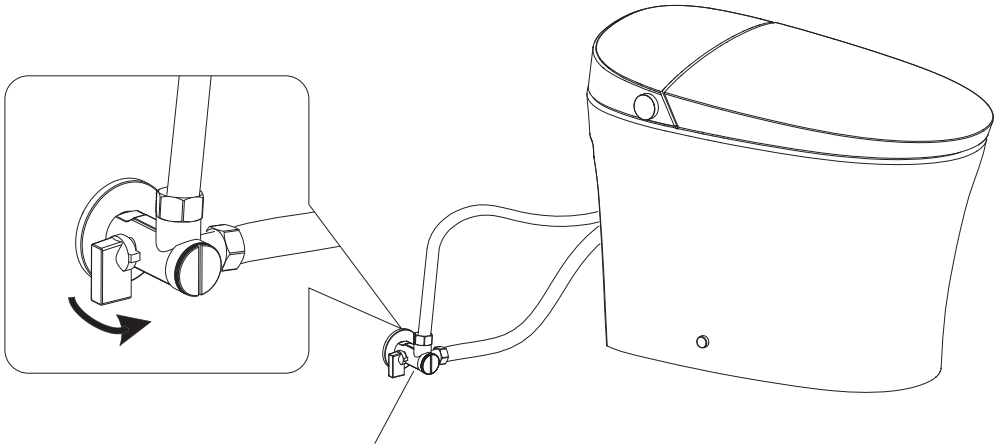

2. Power Connection

- Insert the leakage protection plug into a power socket, press the reset switch, plug indicator lights up, indicating that the power is on.

Note:
Press the test button prior to usage, the reset switch pops up indicating that the leakage protection function is normal.

Press the TEST button (then RESET button) every month to assure proper operation.

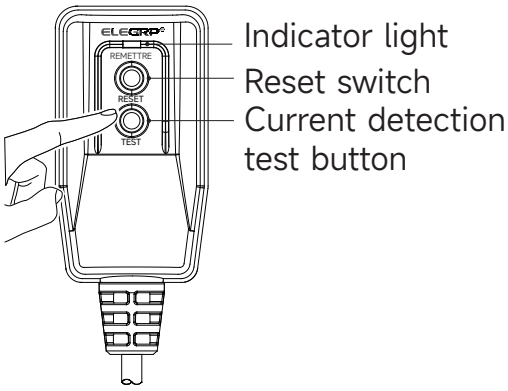

* Only for models with leakage protection plug.
* Please refer to the actual product.

3. Self-inspection

a. Once power is connected, the buzzer beeps. The button lights up in white, and the self-inspection starts.
b. The buzzer beeps again, then the self-inspection completes.
c. The product is ready to use.

Maintenance

Main unit care and maintenance

1. Shut off power supply before doing maintenance.
2. Use only a soft, damp cloth to clean. Avoid using harsh chemicals.

3. Once cleaning is completed and all surfaces are dry, re-connect the power plug.

Spray nozzle maintenance and care

1. When no one is seated, turn the knob clockwise. The nozzle will automatically extend for cleaning access.
2. When the nozzle moves forward, the nozzle can be removed and cleaned separately.

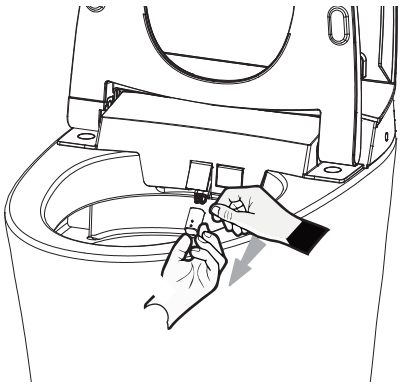

3. Use only a soft cloth or soft brush to clean. Do not pull or push the wand, to avoid damage.

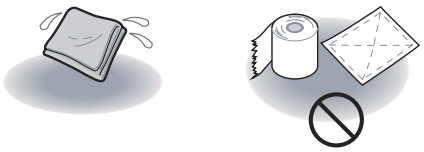

4. Put the nozzle back and short press the knob to return the spray wand to its normal position.

Filter maintenance

If poor spray performance occurs under normal conditions:

1. Turn off power and the angle valve
2. Unscrew angle valve nut

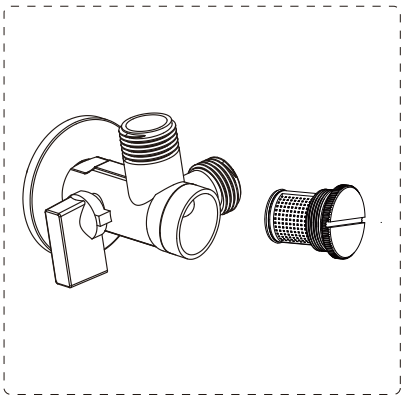

3. Remove filter net

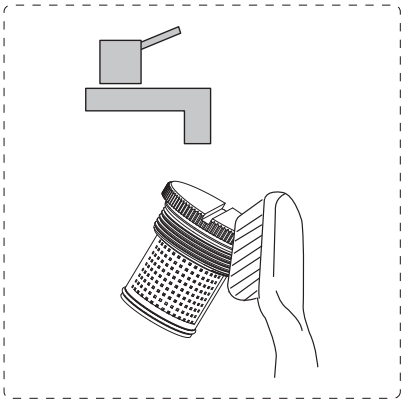

4. Clean out the filter net under running water using a toothbrush
5. Reinstall filter and angle valve nut.
6. Turn on the angle valve and connect power.

Emergency troubleshooting

Power and water failure

- Long press the knob on the main unit to flush. (please install the battery before use.)

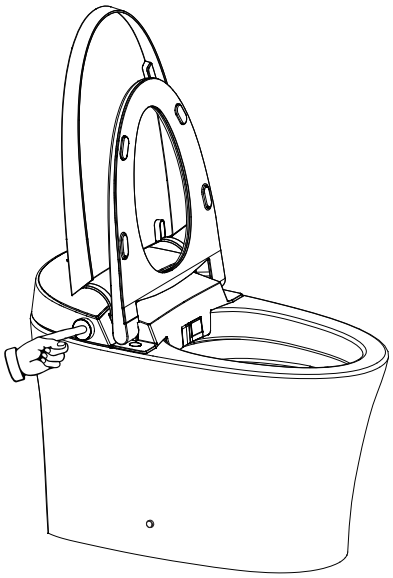

- Fill a barrel with around 2.1Gal (8L) water and manually flush and flush the ceramic bowl.
  Note: Avoid water spilling from bowl.

Product unused for a period of time

- When the product is left unused for a long time, especially in cold weather, it is highly recommended to drain the water to prevent freezing.

To discharge water

1. Activate flushing, and then turn off angle valve to stop water supply.
2. Unplug and cut off the electricity
3. Disconnect the hose from angle valve, drain the water and reconnect.

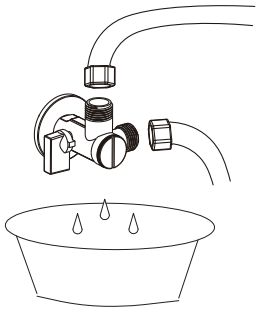

4. For your safety, it is recommended to put antifreeze into the remaining water in the bowl.

* Please turn on power and water supply when using again.

⚠ Note: Before water discharging, the power must be cut off!

Failure of remote control

1. Operate via knob on the main unit.

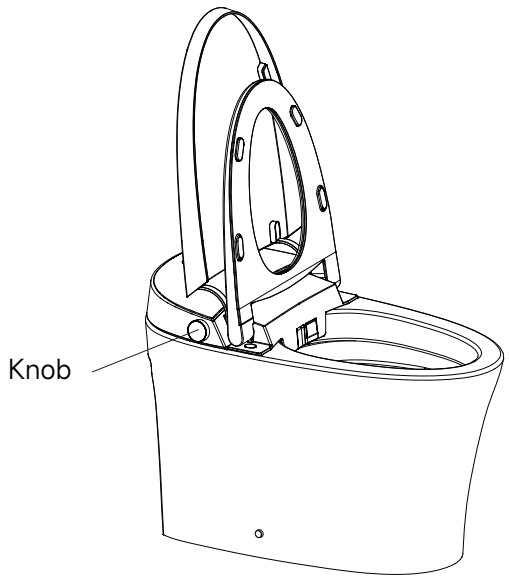

2. Remote control battery replacement

- Remove the remote control from holder.
- Open the battery cover and replace the batteries.
- Put the remote control back.

Note:
After battery replacement, the remote control settings will be restored to the defaults. Please reset the settings as needed.

Replace the flushing battery

- Remove the battery box from the rear end of the ceramic (as shown in the picture).

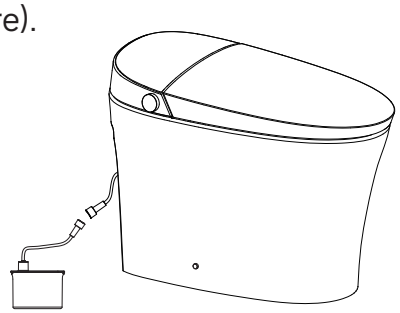

- Installation method of dry cell

① Remove the snaps on the left and right sides of the battery box respectively to separate the upper and lower covers of the battery box.

② Install 10 pcs new AA batteries according to the + and - pole markings in the battery compartment, and finally fasten the upper and lower covers of the battery box.

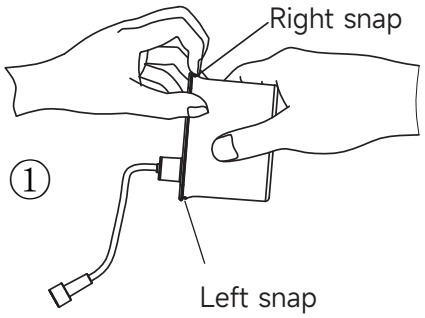

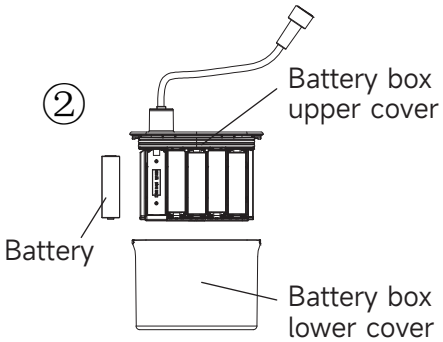

Kind tips:
If you use the "power-off flush function" and notice the night light flashes several times before turning off, it indicates that the battery power is low. Please replace the flushing battery promptly, as it may otherwise affect the use of the power-off flush.

Description of the Knob Function

Knob definition / Knob function	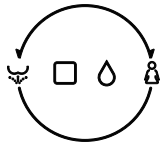 Push the knob	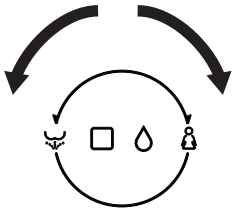 Anticlockwise rotation / Clockwise rotation
Rear wash/ front wash	In the seated state, turn the knob clockwise to start the feminine wash function, and turn it counterclockwise to start the rear wash function. If you short press the knob during cleaning, the current function will be stopped.	
Nozzle position adjustment and cleaning water pressure adjustment	When rear/front washing, turn the knob clockwise to move the nozzle position forward, and turn the knob counterclockwise to move the nozzle position backward. Long press the knob to switch to water pressure adjustment, turn clockwise to increase the water pressure, counterclockwise to decrease the water pressure, long press the knob again to switch to nozzle position adjustment.	
Air temperature adjustment	In the warm air state, turn the knob clockwise to increase the air temperature level, and turn the knob counterclockwise to decrease the air temperature level.	
Nozzle cleaning	In the state of leaving the seat, turn the knob clockwise to start the nozzle manual cleaning function; short press the knob to stop the manual cleaning function, and the nozzle retracts.	
Flush function	In normal working mode, when there is no cleaning, drying or nozzle cleaning function, shortly press the knob to start the flushing function.	
Operating mode	In standby mode, press the knob to enter normal working mode.	
Standby mode	In normal working mode, when leaving the seat, press and hold the knob, the main unit enters standby mode, all functions are turned off, and the indicator light goes out.	

Reminder: Upon startup, all function settings default to the middle setting. After using the remote control, the function setting will switch to what was set on the remote.

LED display description

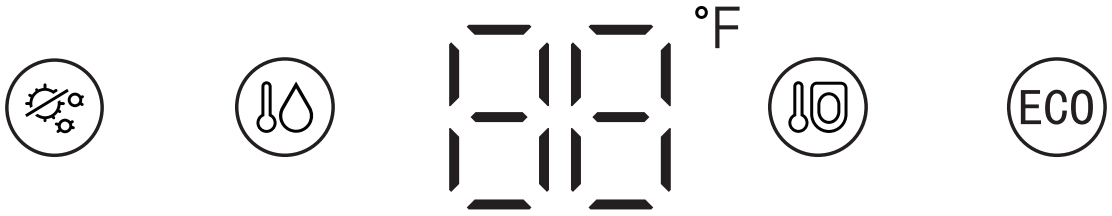

Sanitation | Water temperature | Temperature display | Seat temperature | ECO energy saving

Description of LED display:

1. During self-inspection, icons of water temperature, seat temperature and ECO light up, and the temperature is displayed at 88. After self-inspection, water temperature and ECO icons go off and seat temperature icon lights up, showing current seat temperature. The temperature shows “--” at neutral level.
2. In non-energy-saving mode, seat temperature icon lights up, showing current seat temperature (temperature in neutral shows "--"). During water temperature adjustment, seat temperature icon goes off and water temperature icon lights up, showing current water temperature (temperature in neutral shows "--"). Water temperature icon goes off and seat temperature is displayed after 10 seconds.
3. During washing, seat temperature icon goes off and water temperature lights up, showing current water temperature (temperature in neutral shows "--").
4. In energy saving mode, ECO icon lights up. Seat temperature in neutral shows "--", otherwise it shows Level 1.
5. LED display goes off completely when shutting down.

Troubleshooting guide

Problem	Cause	Solution
Poor flushing	Water supply hose is kinked.	Straighten the hose to remove the kink.
	Angle valve is not fully turned on.	Turn on the angle valve fully.
	Filter is dirty.	Clean the filter.
Not flushing	Angle valve is shut off.	Turn on the angle valve.
	A power outage occurred.	Use a bucket to manually flush.
	A water failure occurred.	Use a bucket to manually flush.
	Previous cycle not finished.	Wait until the previous cycle finishes then flush.
Auto flushing does not work	"Auto flushing" is set to "OFF"	Set to "ON".
	The seat switch will not turn on unless the user is seated properly.	Sit back on the toilet seat.
Auto pre-wetting does not work	"Auto pre-wetting" is set to "OFF".	Set to "ON".
	The seat switch will not turn on unless the user is seated properly.	Sit back on the toilet seat.
Low water temperature	The water temperature is not set properly.	Adjust the water temperature.
	When the temperature of the water supply or of the bathroom is low, the water temperature may be low when first sprayed.	
Low seat temperature	The seat temperature is not set properly.	Reset the seat temperature.
	In energy saving mode.	Switch to functional mode and wait for 5+ minutes.
	In standby mode.	Switch to functional mode and wait for 5+ minutes.
	When seated, after 10 minutes, the temperature begins to decrease. Then after 5 minutes, the toilet seat heater turns to level 1 and stays.	Stand up from the seat and then sit again.
Low air temperature	The air temperature is not set properly.	Reset the air temperature.

Problem	Cause	Solution
Spray rod does not operate or water pressure is low	Power off	Turn on the power.
	The seat switch will not turn on unless the user is seated properly.	Sit back on the toilet seat.
	Stuck due to impurities	Remove impurities.
	Water failure has occurred.	Press the "STOP" button on the remote control and wait until water service is restored.
	Angle valve is shut off	Turn on the angle valve.
	Filter is dirty	Clean the filter.
	Water supply set to a low pressure.	Set the water pressure to required range.
Waste material does not flush down completely	Angle valve is not fully open.	Turn on the angle valve fully.
	Water filter is clogged.	Clean the filter.
	The water supply to the toilet is disrupted by other running water fixtures	Cease using other fixtures and then flush toilet
	The original supplied angle valve was not installed	Install the original angle valve which has a filter included.
	Flushing may be difficult depending the consistency of the waste material.	Flush the toilet again. If the bowl unit is not cleansed with flushing, remove the stains with a brush or similar instrument.
Water is leaking from the plumbing connections	Inspect to see if any nuts in the connection are loose.	Firmly tighten the nuts.
	Water leak does not stop.	Close the angle valve and consult service provider.
There are black stains on or around the bowl unit	Ammonia in urine may cause black stains.	If urine has splashed on the bowl unit or floor, wipe it up immediately.
There is black or pink slime on the toilet bowl surface	This is a result of growth of airborne fungal spores or bacteria that feed on waste residue on the toilet bowl.	Clean with a (non-abrasive) neutral toilet detergent.
There is residue on the bowl unit surface	Oil and other hard-to-see grime may stick to the bowl unit surface.	Clean with a (non-abrasive) neutral toilet detergent.

Problem	Cause	Solution
Night light does not work	Night light function is "OFF".	Set to "ON".
Remote control does not work	The positive and negative direction of the batteries is incorrect.	Re-load batteries.
	Batteries have expired	Replace new batteries.
Stops in the middle of use	The drying feature stops automatically after about 5 minutes of continuous use.	
	The cleaning feature stops automatically after about 3 minutes of continuous use.	
	The seat switch has difficulty detecting that the seat is in use. Sit back on the toilet seat. If the user gets up slightly from the seat, or sits forward on the seat, the seating switch may temporarily stop detecting the user‘s presence.	
Water comes out unexpectedly from the spray rod	When the user sits on the toilet seat, water comes out for several seconds while the water is warmed up. This is normal function.	
When flushing, a gurgling sound canbe heard.	When the toilet is flushed together with waste material, the sound is a result of air, waste material and water being pulled through the system. This is normal function.	
⚠ **Caution**	Please disconnect the power, wait for 30 seconds, then reconnect the power to restore to factory settings. If the problem still cannot be resolved, please disconnect the power and contact service providers.	

CANEST®

Get free technical support for the lifetime of your product.

Email: service@canesthome.com

Phone: 1-702-824-3195

ASVFAF0446003A-1.1