Side Table

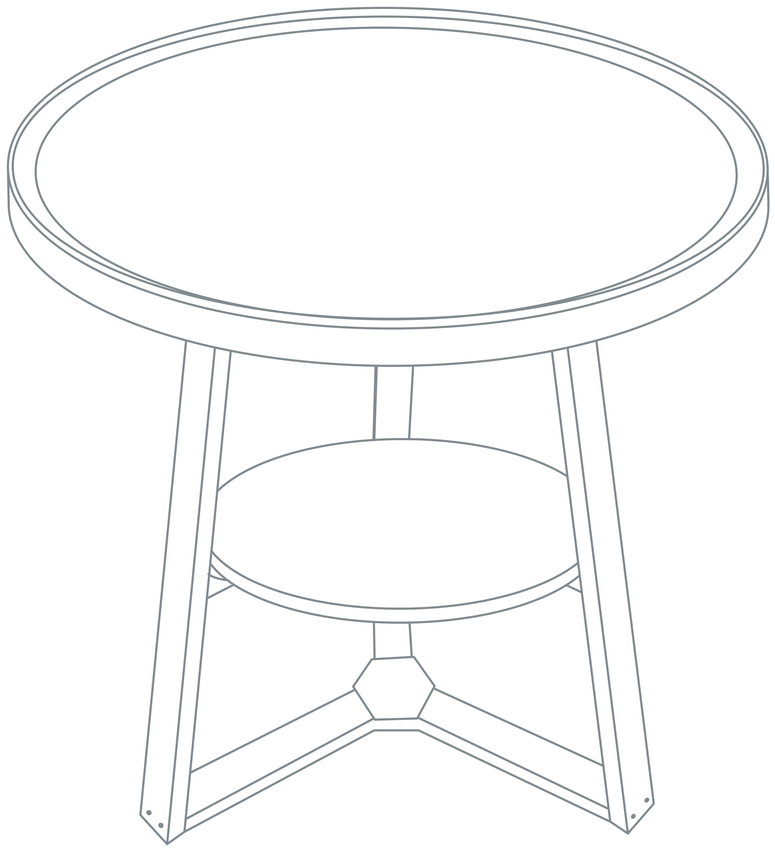

Ax1	Bx3	Cx1
Dx1	Ex6 Fx3	Gx1

Step 1

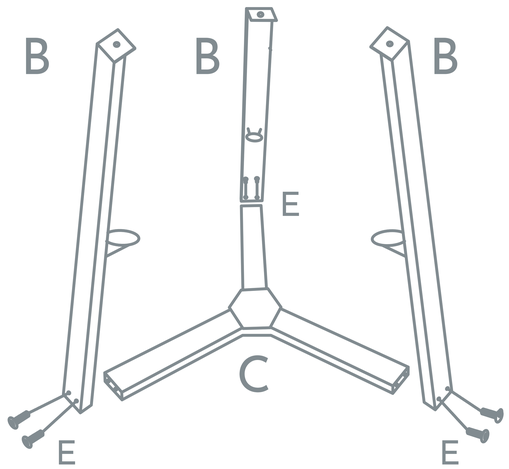

Use Hex Key (G) and Screws (E) to fasten Legs (B) to the Base (C).

Step 2

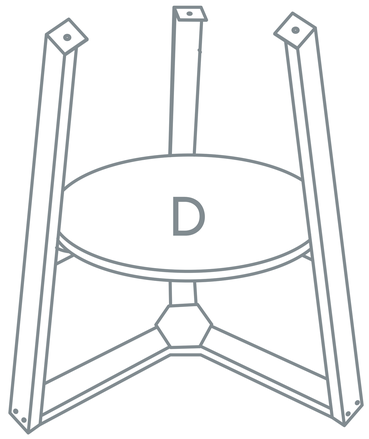

Place the Small Tabletop (D) inside the middle of the assembled frame.

Step 3

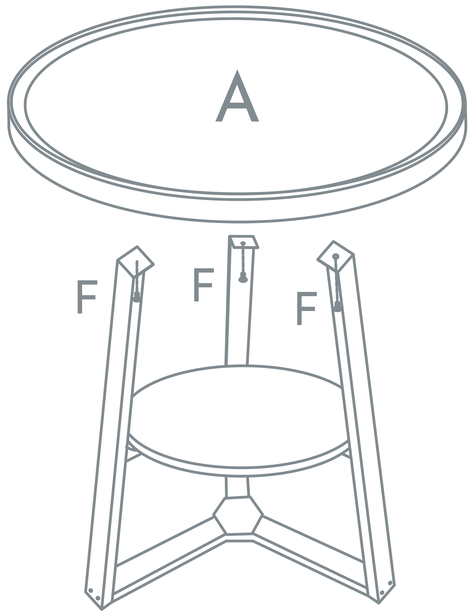

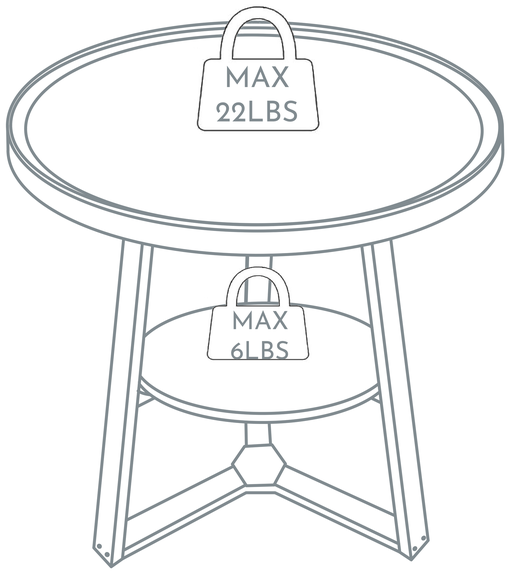

And finally, use Hex Key (G) to fasten screws (F) and attach Large Tabletop (A) to Legs (B).