TEAR SHEET



Leslie 17" Double Sconce

Item # SK 2206BSL-L

Designer: Suzanne Kasler

Height: 16.5"
Width: 12.25"
Extension: 6.25"
Backplate: 4.25" Round
Finishes: BSL, GI, PW
Shade Treatments: L
Shade Details: 4.25" x 4.75" x 6"
Socket: 2 - E12 Candelabra
Wattage: 2 - 6.5 LED B11
Weight: 2 Pounds
Note: 120V Configuration Only | Requires Smaller Outlet Box

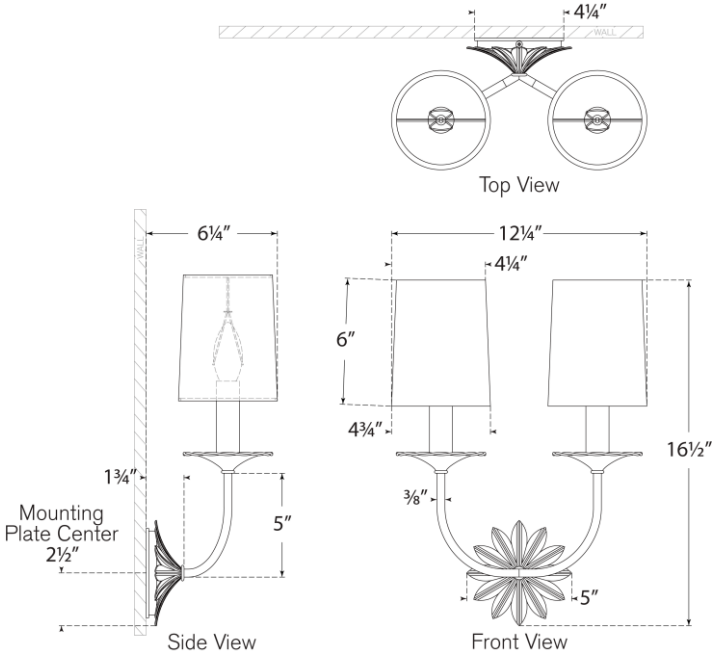

VISUAL COMFORT & CO.

DAMP
LED
3