Cosmo Tall 2 Door Storage Cabinet

4977XXXCOM

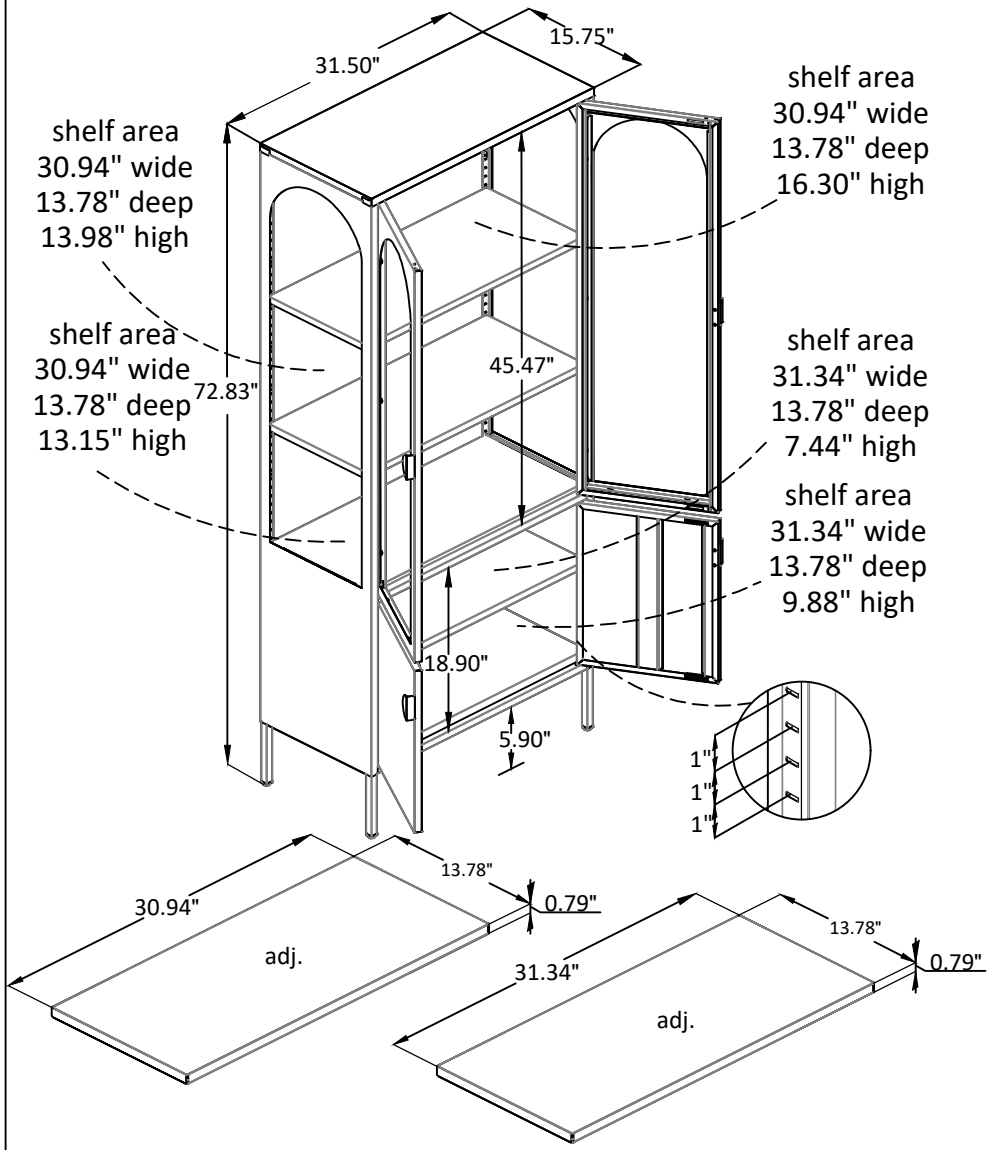

Wood Breakdown:
Total Storage:15.04cubic feet

Overall Product Size:
31.5"W x 15.75"D x 72.83"H
80cm W x 40cm D x1850cm H

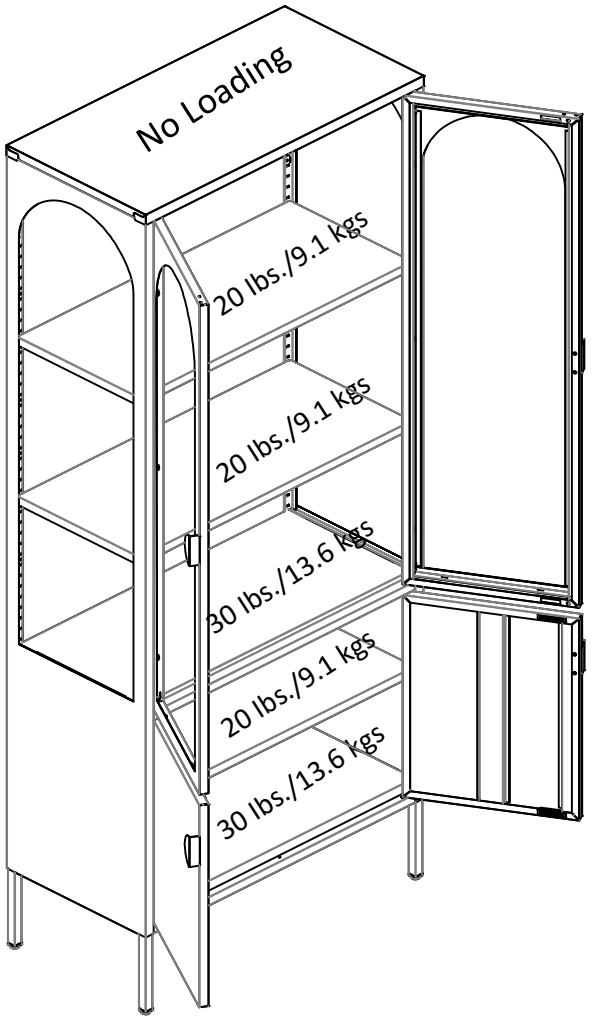

Maximum Weight Capacities
Unit Weight: 98.78 lbs (44.9 kg)