KVPB30160,1,6,7

Brass Console Legs & Towel Bar

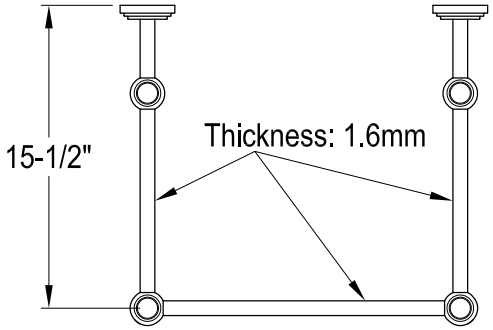

BAS3320,1,6,7
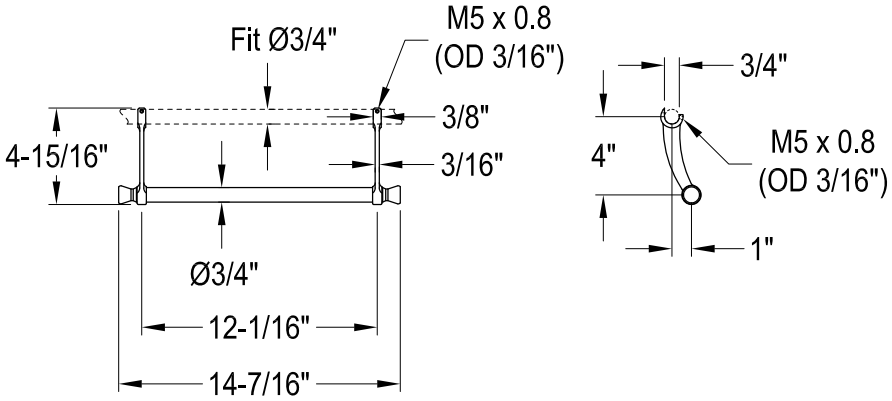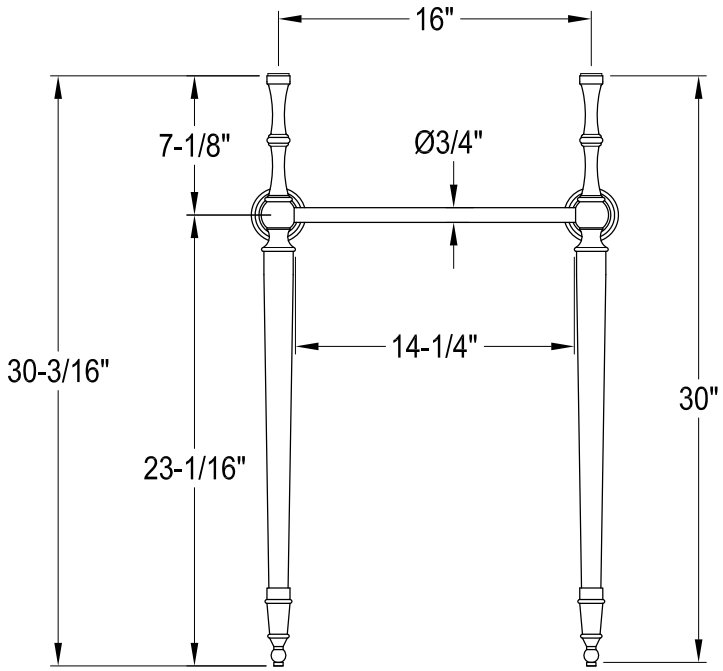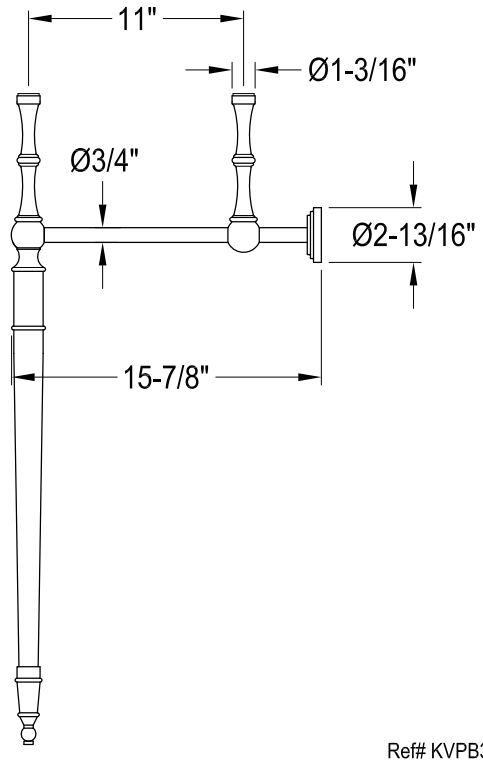
Towel Bar