ASSEMBLY INSTRUCTIONS

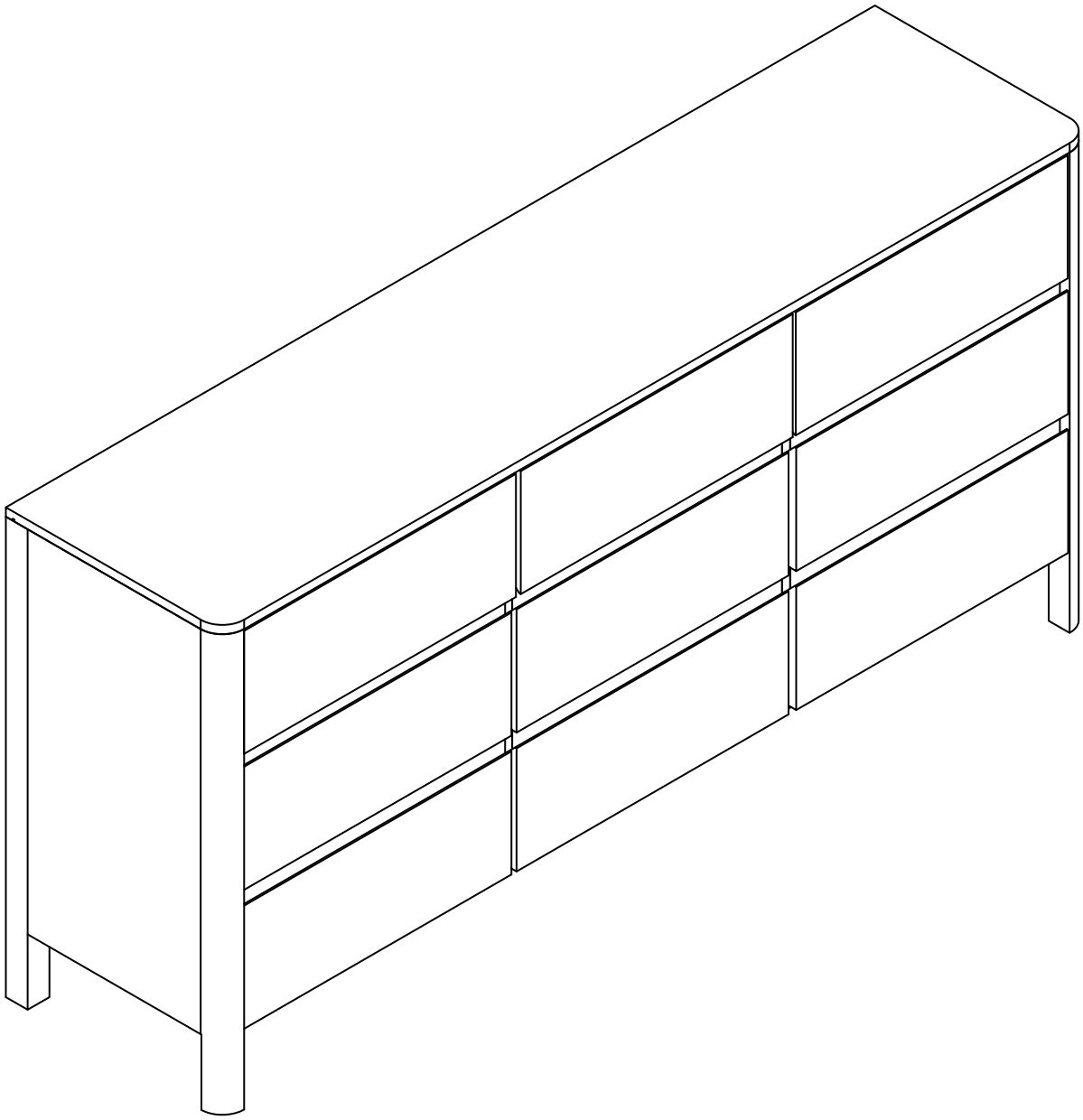

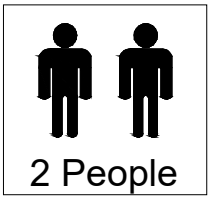

sentowayCS@hotmail.com

RETURNS

CHANGED YOUR MIND AND NEED TO RETURN YOU ITEM?

PLEASE FOLLOW THE BELOW INSTRUCTIONS:

- If you have purchased and have simply changed your mind, follow the retailer's instructions for returns.

DEFECTIVE ITEMS

- If your item is defective in any way, i.e. it doesn't work but you can't identify why, in the first instance, please contact us.

DAMAGED ITEMS

- If you receive an order with obvious shipping damage from the retailer, then we suggest the delivery is refused. If the delivery has been accepted and then shipping damage is found, please follow the specific instructions advised by the retailer.
  In all circumstances please save all packaging material and paperwork for the order. Please be aware that if you dispose of packaging material or attempt to return the merchandise without contacting the fulfiller, you jeopardise your chances of making a claim, and you may not receive a credit for the return.

AFTER-SALES CONTACT

sentowayCS@hotmail.com

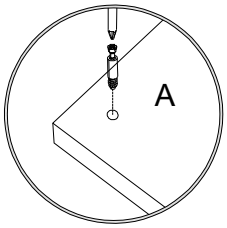

1.Screw cam boit into panel

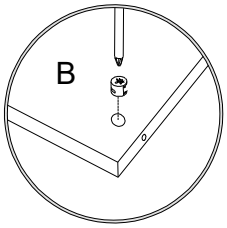

2.Push cam into panel - arrow feature on cam top points to panel edge

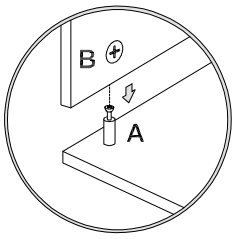

3.Aligu cam bolt(s) with cam(s) and insert all the way into cross-bored hole(s)

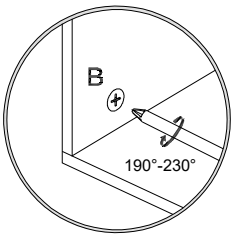

4.Rotate cam(s) clockwise 190°-230° to lock panels together

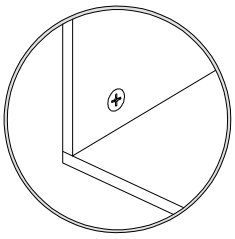

5.Panels should be tight against each other and connection should be rigid

Insert the wood dowel [C] at least half way by tapping lightly with a rubber mallet, IF NECESSARY.

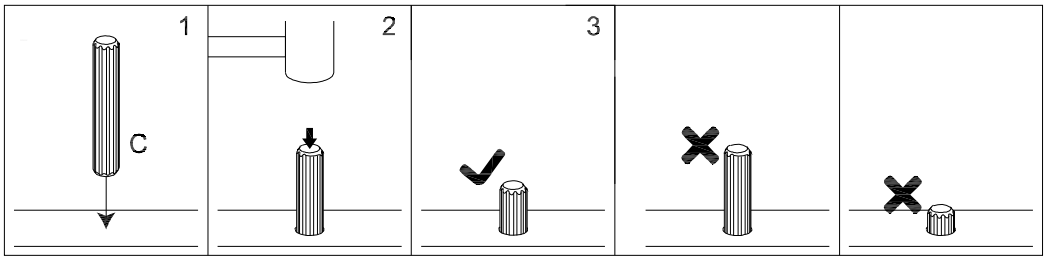

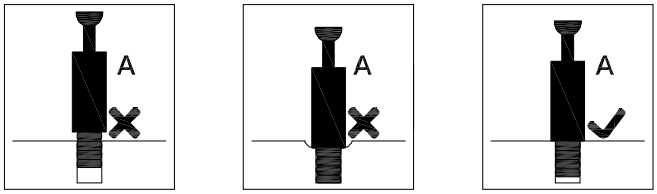

⚠ WARNING

- Unit must be placed on a level surface or leveled with included hardware (when applicable).
- Do not sit or stand on or allow children to climb, sit or stand on the assembled product.
- For safety reasons, it is imperative that this unit be mounted to the wall.
- Do not use without installing the tip restraint.
- Unit can tip over causing severe injury or death.
- Do not exceed the recommended weight limits.
- Evenly distribute the weight on each level and always keep the heavier loads on the bottom.
- Before cutting, drilling or hammering into any wall or floor surface, verify the location of electrical, plumbing and gas lines. Cutting may cause serious injury.

WD0002WL-1

1 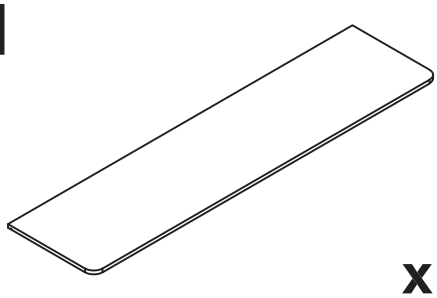 x1	2 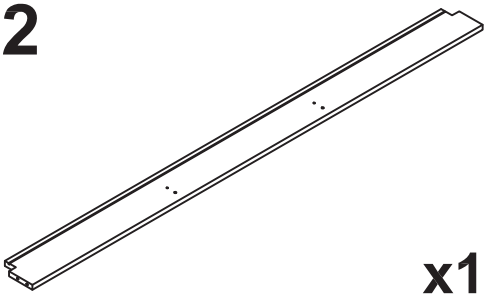 x1	4 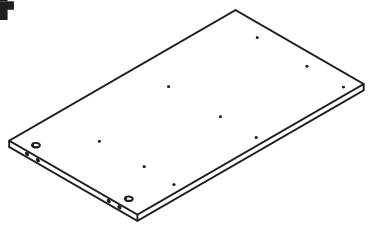 x2
7 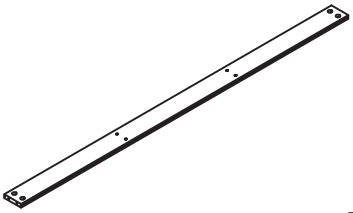 x1	8 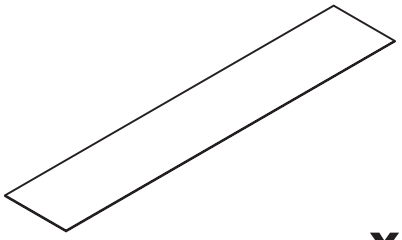 x2	9 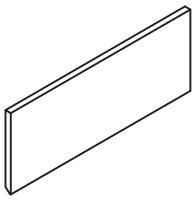 x3
10 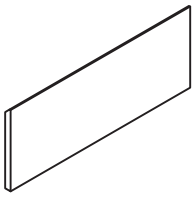 x5	13 x2	14 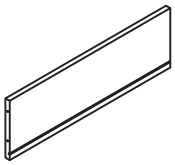 x5
15 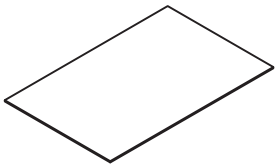 x2	16 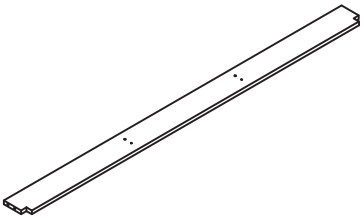 x1	12 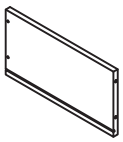 x2

WD0002WL-2

3 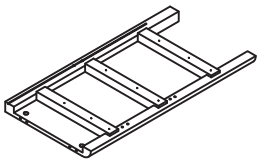 x1	5 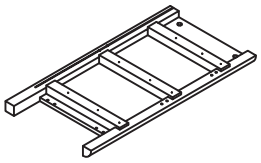 x1	6 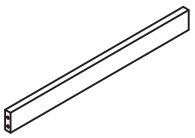 x4
11 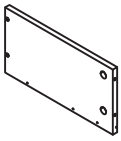 x9	12 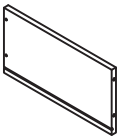 x7	15 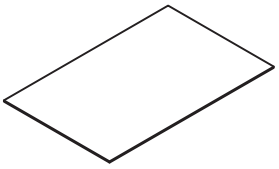 x7
AccessoryCase x1	17 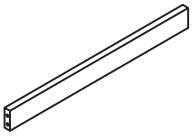 x2	10 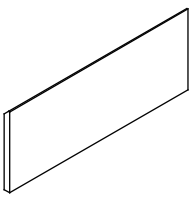 x1

14

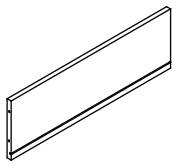

x4

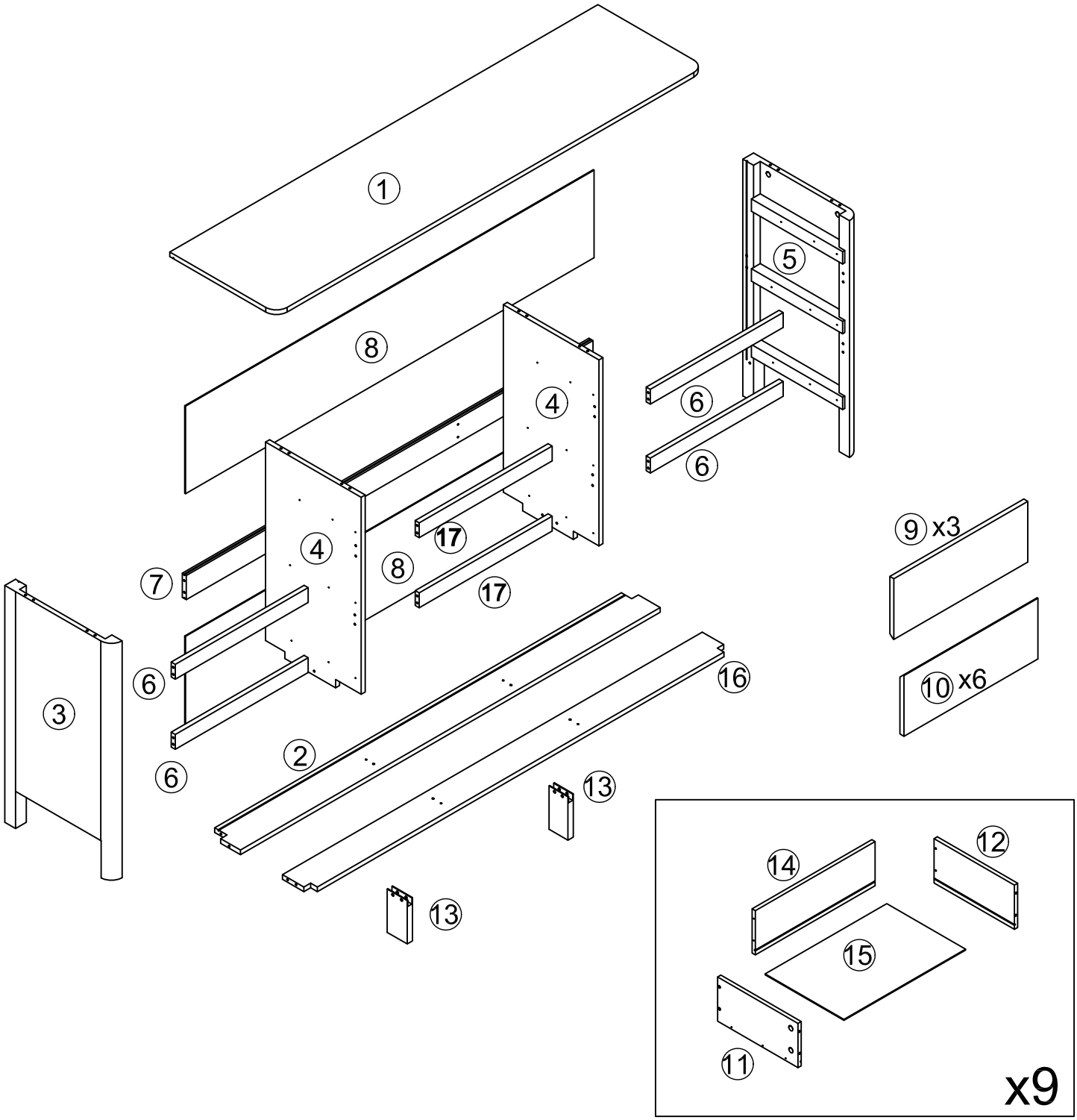

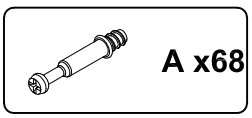
A x68

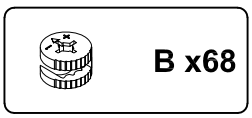
B x68

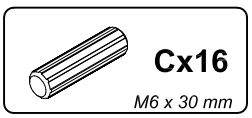
Cx16
M6 x 30 mm

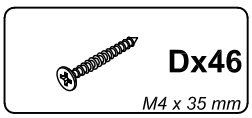
Dx46
M4 x 35 mm

Ex108
M3 x 12 mm

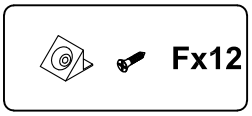
Fx12

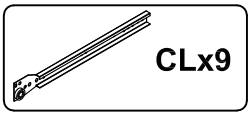
CLx9

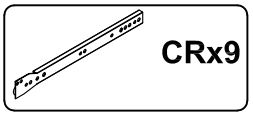
CRx9

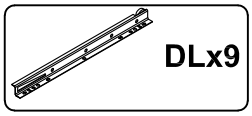
DLx9

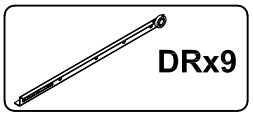
DRx9

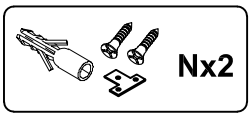
Nx2

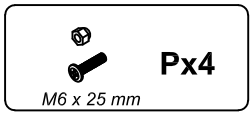
Px4
M6 x 25 mm

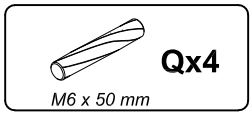
Qx4
M6 x 50 mm

STEP 1

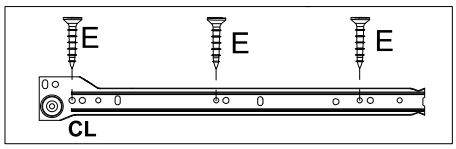

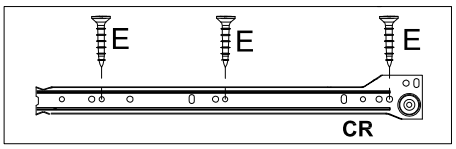

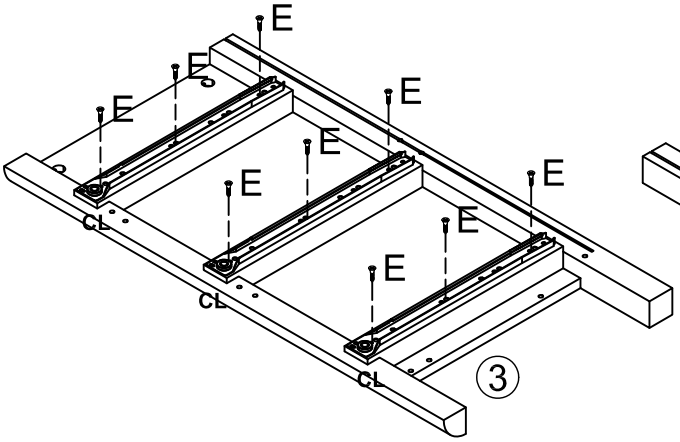

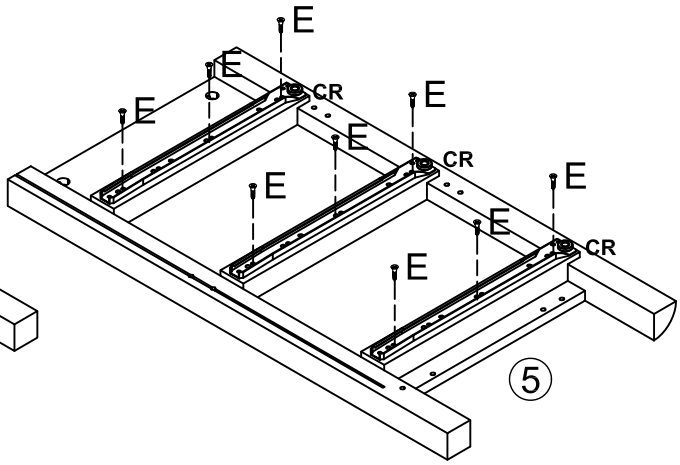

Ex18

M3 x 12 mm

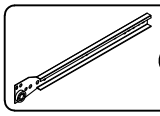

CL x3

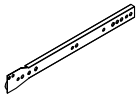

CR x3

STEP 2

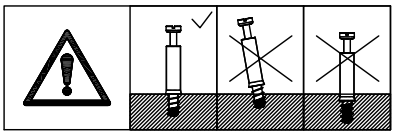

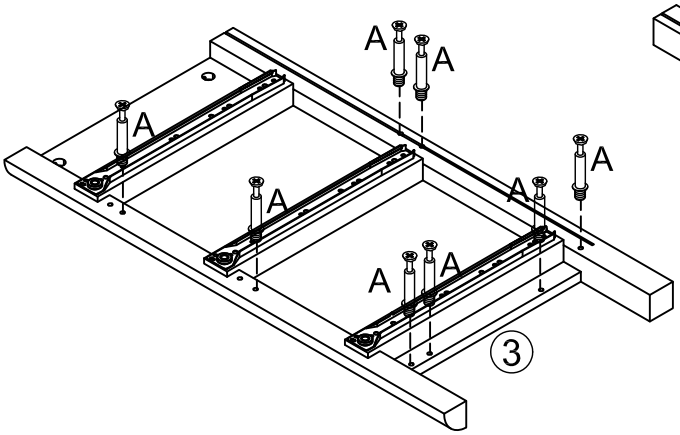

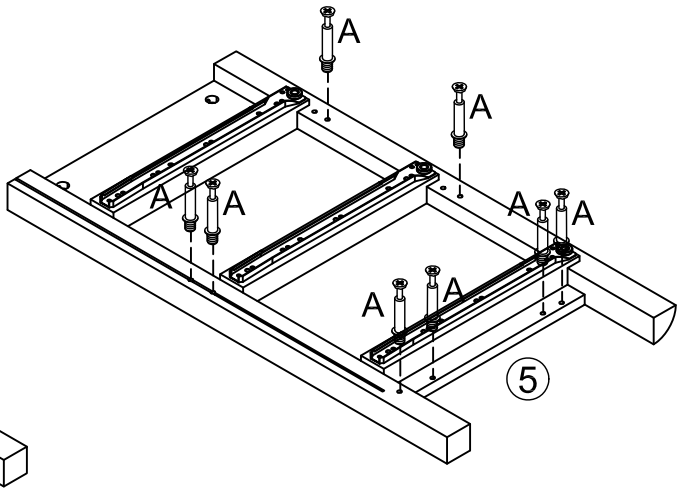

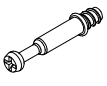

A x16

STEP 3

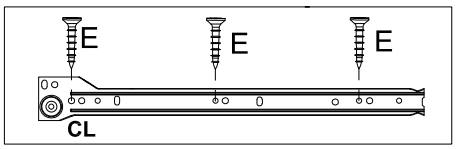

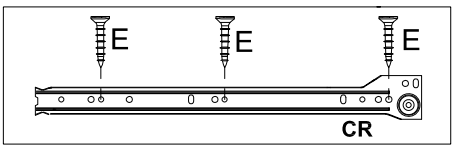

x2

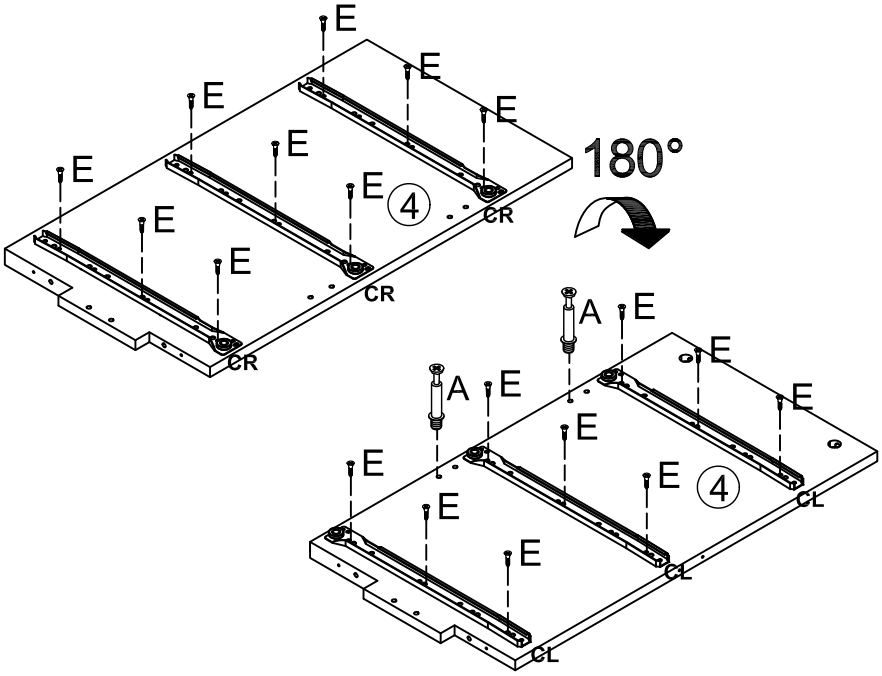

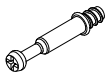
A x4

Ex36
M3 x 12 mm

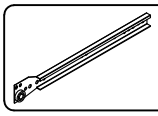
CL x6

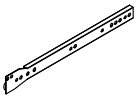
CR x6

STEP 4

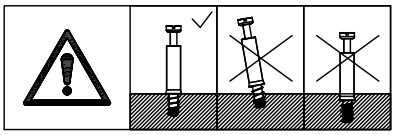

x2

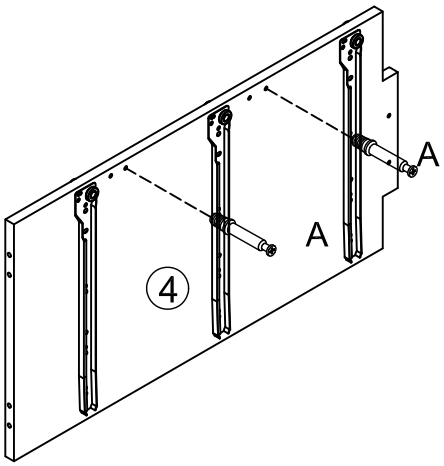

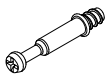
A x4

STEP 5

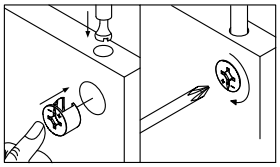

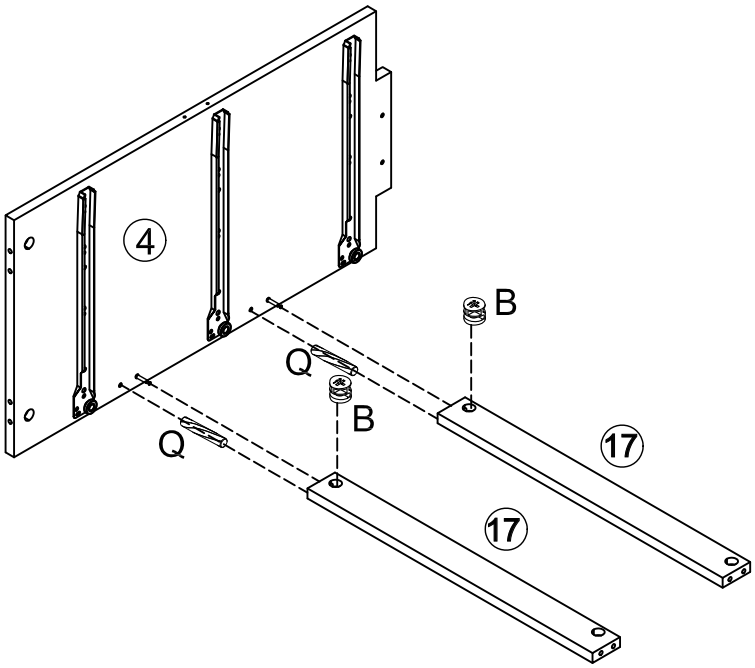

B x2

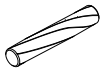

Qx2

M6 x 50 mm

STEP 6

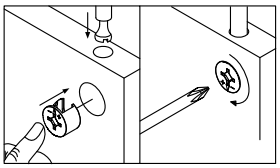

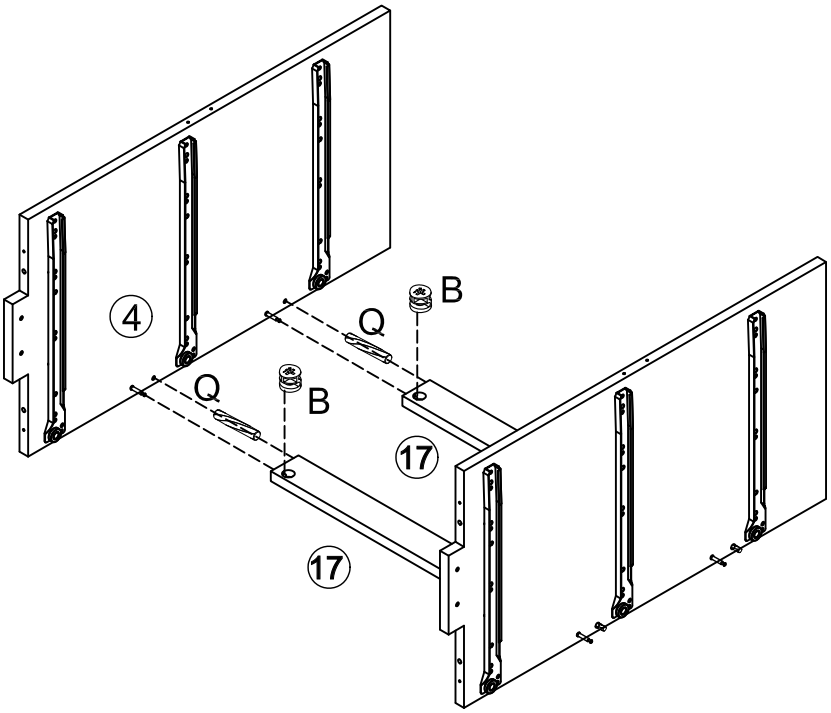

B x2

Qx2

M6 x 50 mm

STEP 7

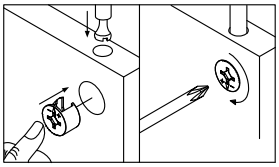

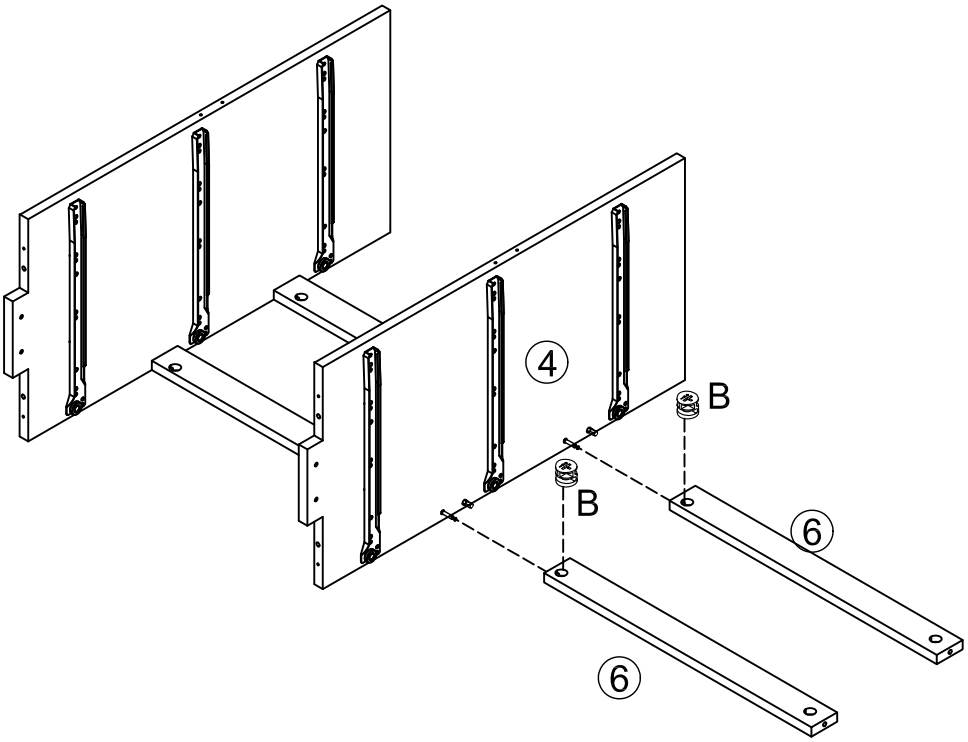

B x2

STEP 8

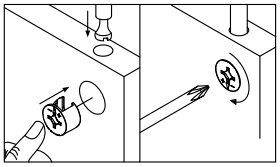

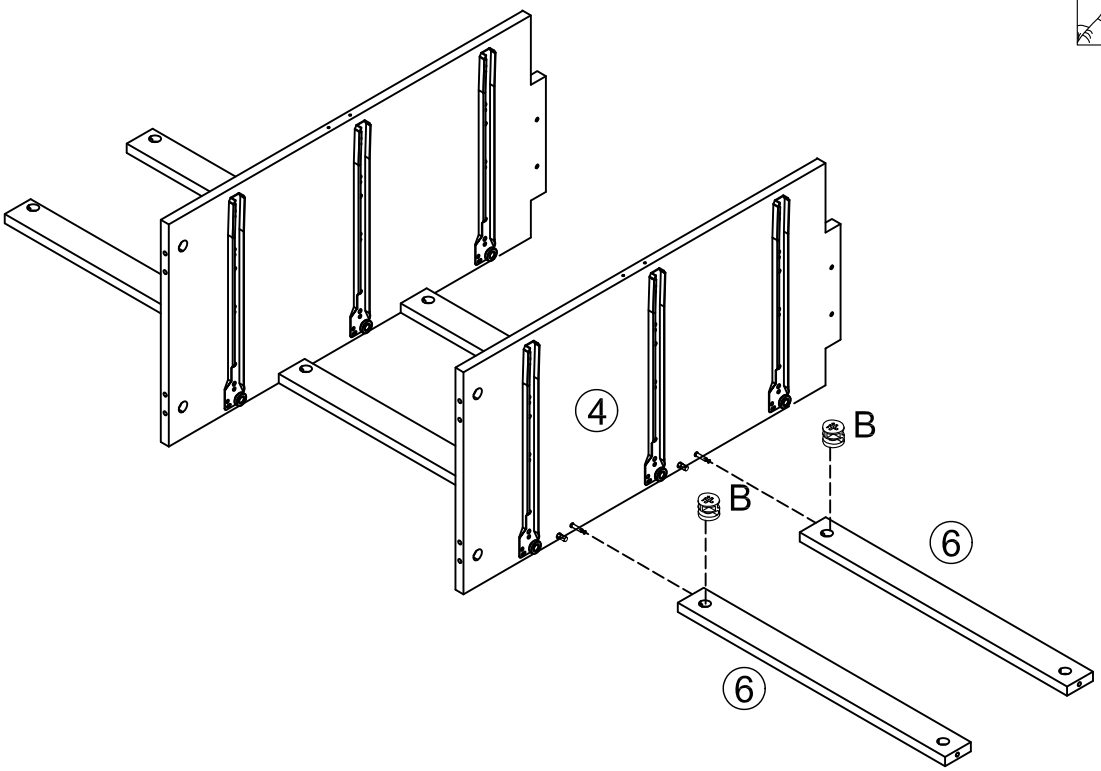

B x2

STEP 9

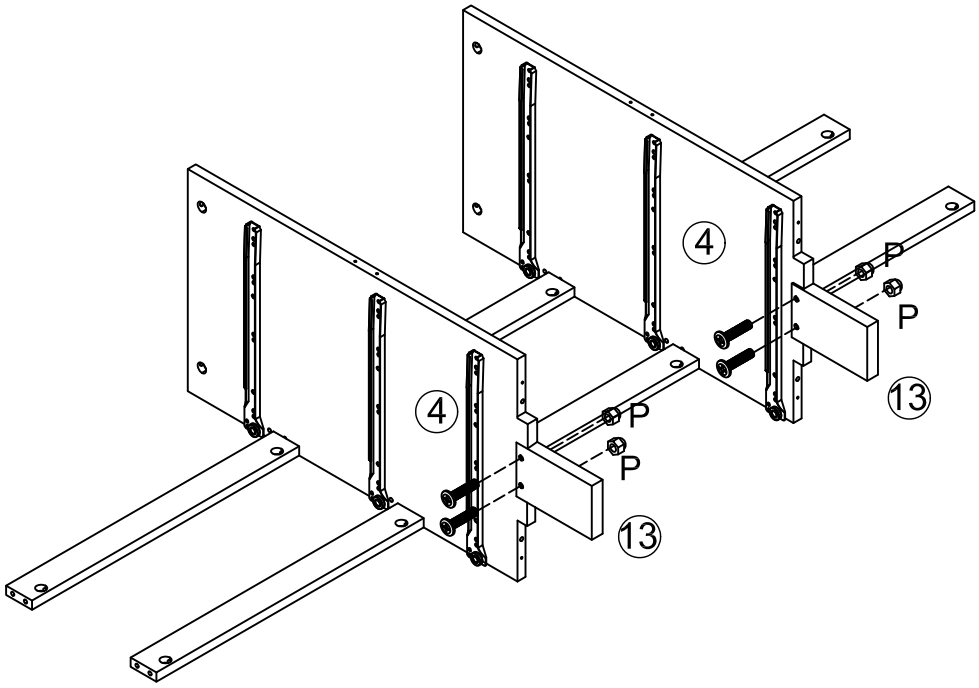

Px4

M6 x 25 mm

STEP 10

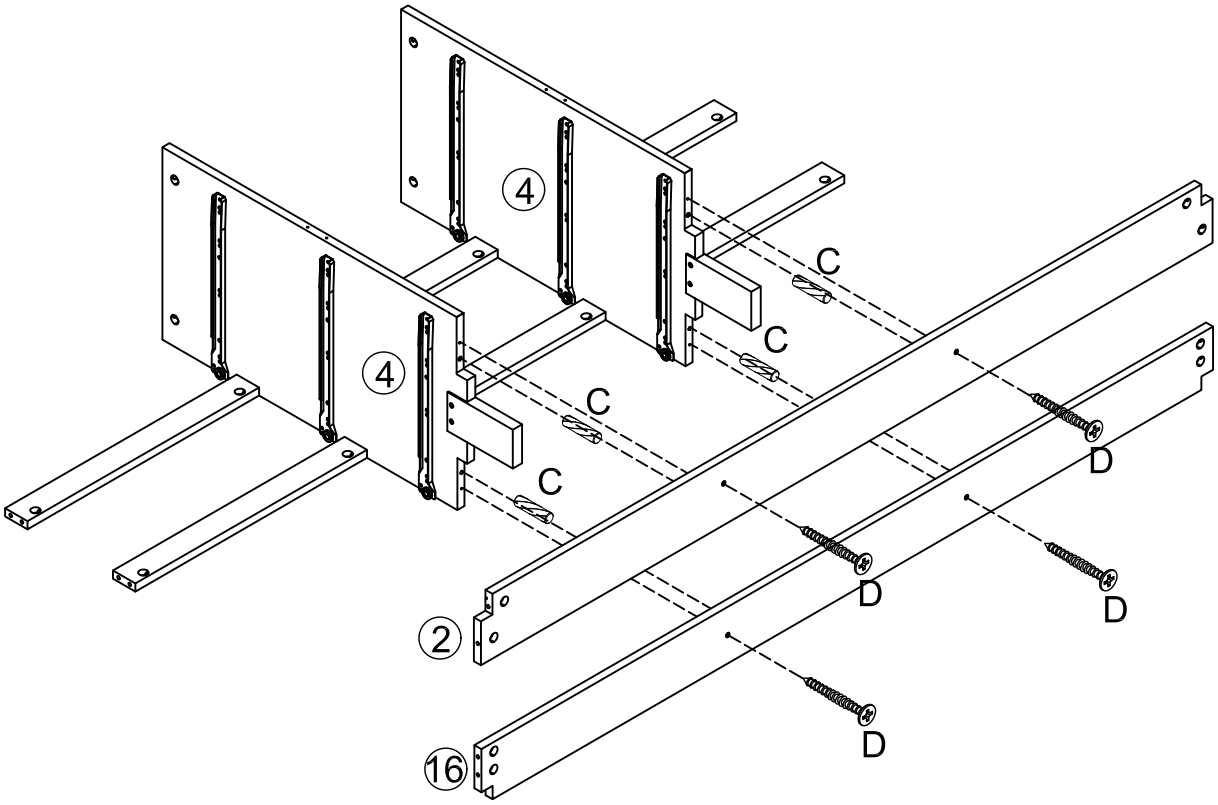

Dx4

M4 x 35 mm

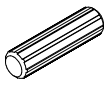

Cx4

M6 x 30 mm

STEP 11

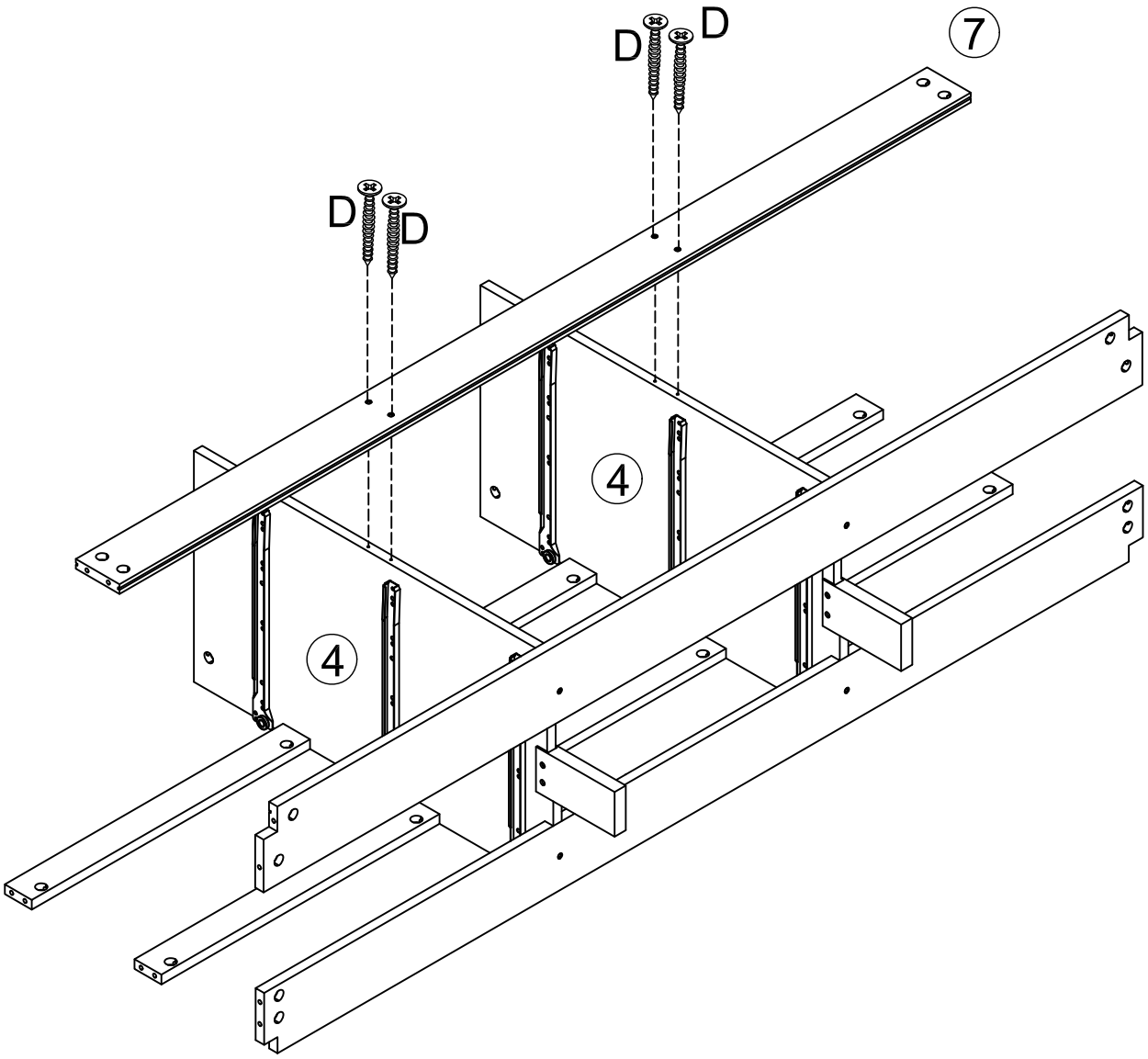

Dx4

M4 x 35 mm

STEP 12

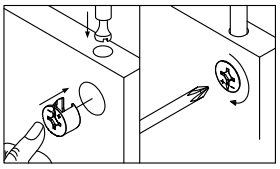

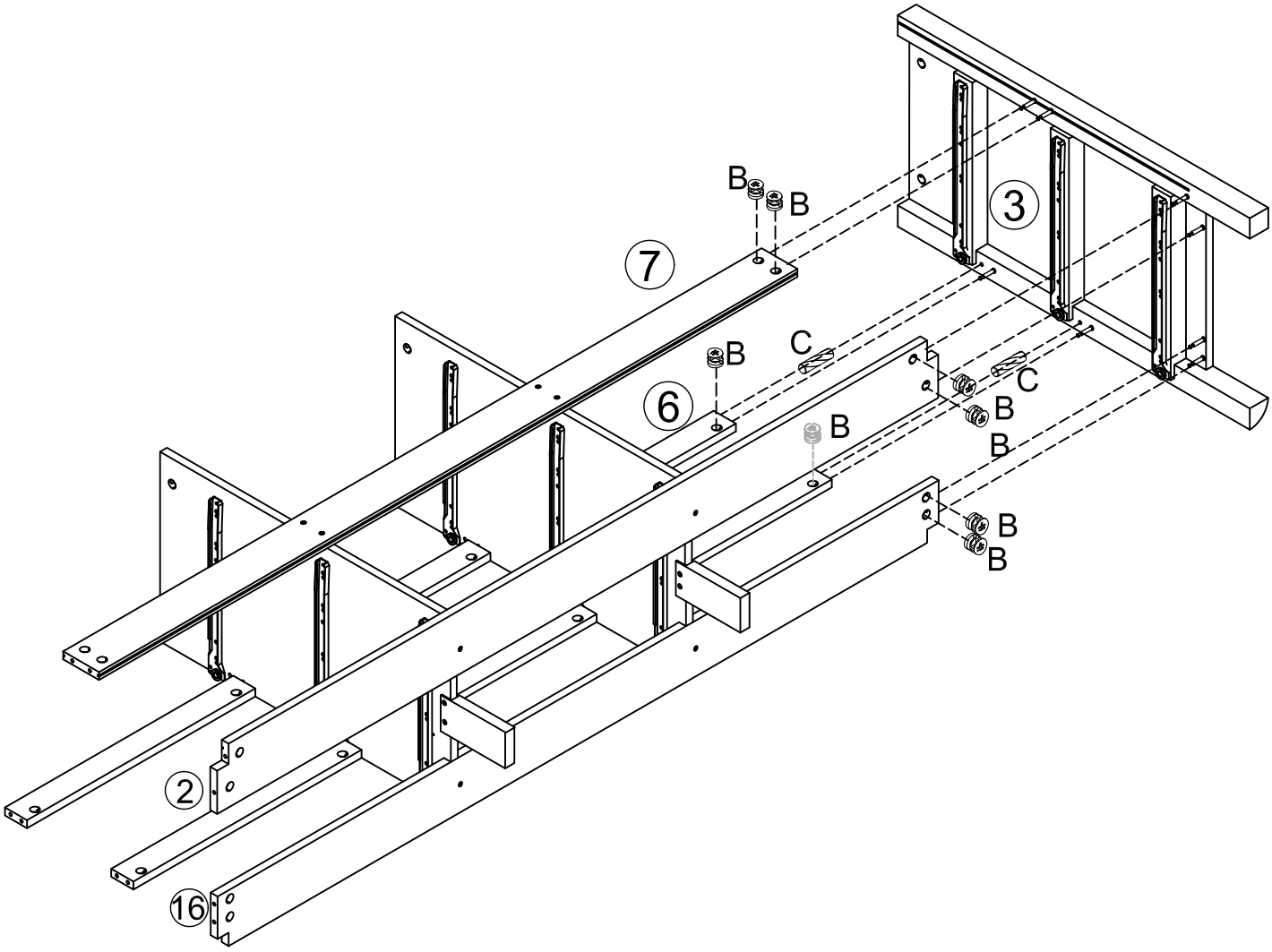

B x8

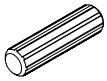

Cx2

M6 x 30 mm

STEP 13

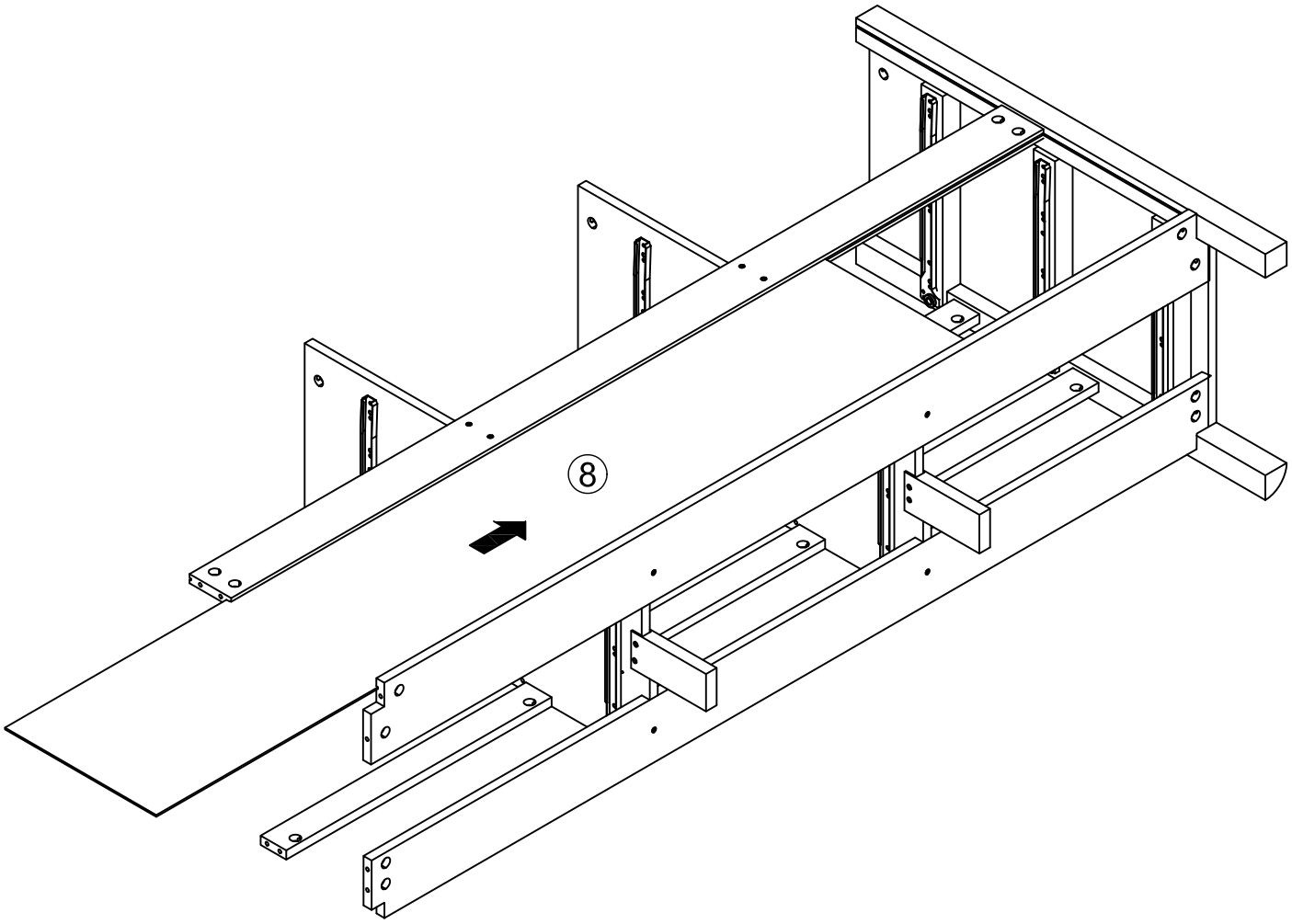

STEP 14

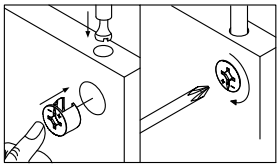

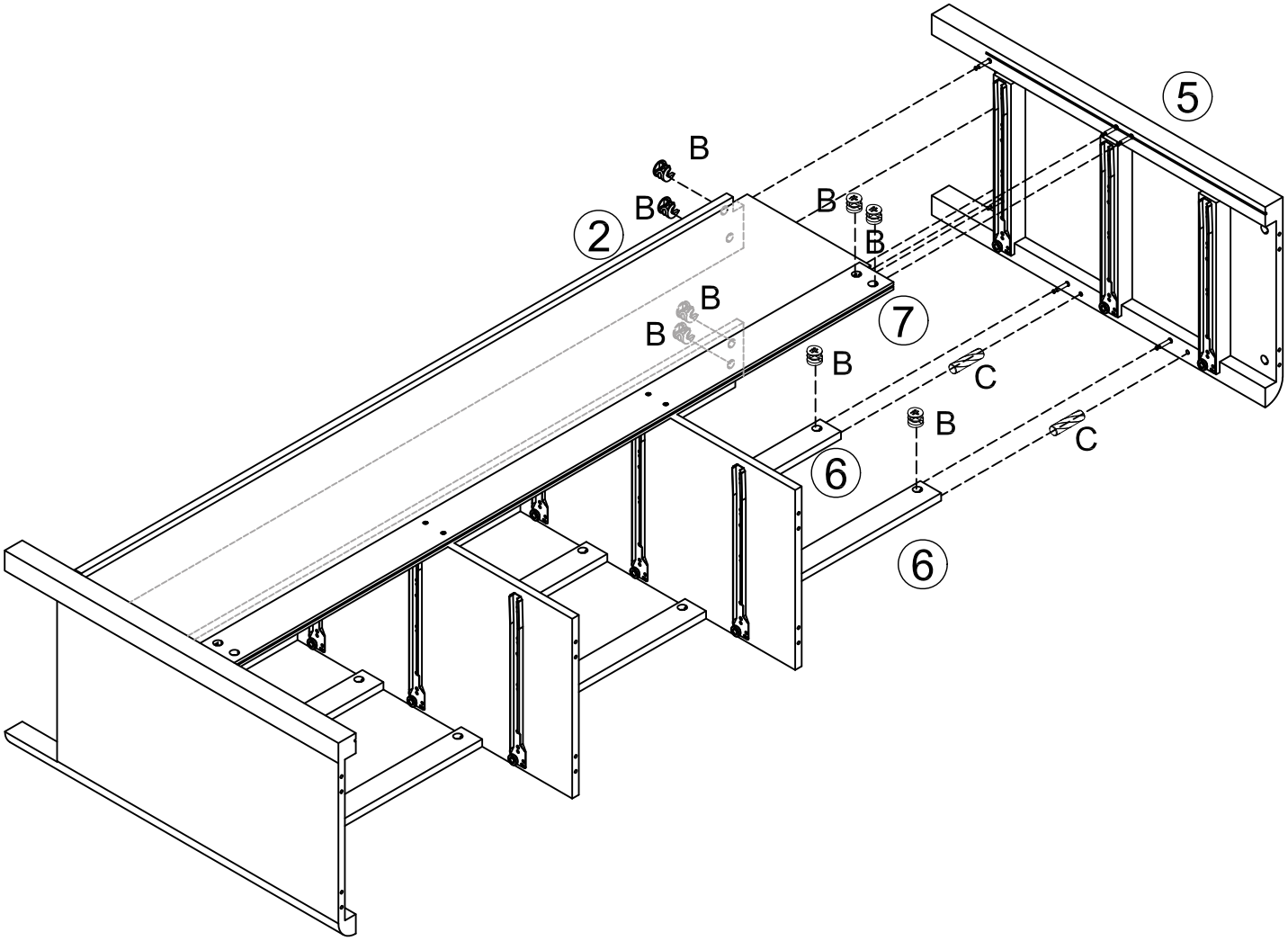

B x8

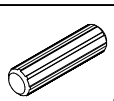

Cx2

M6 x 30 mm

STEP 15

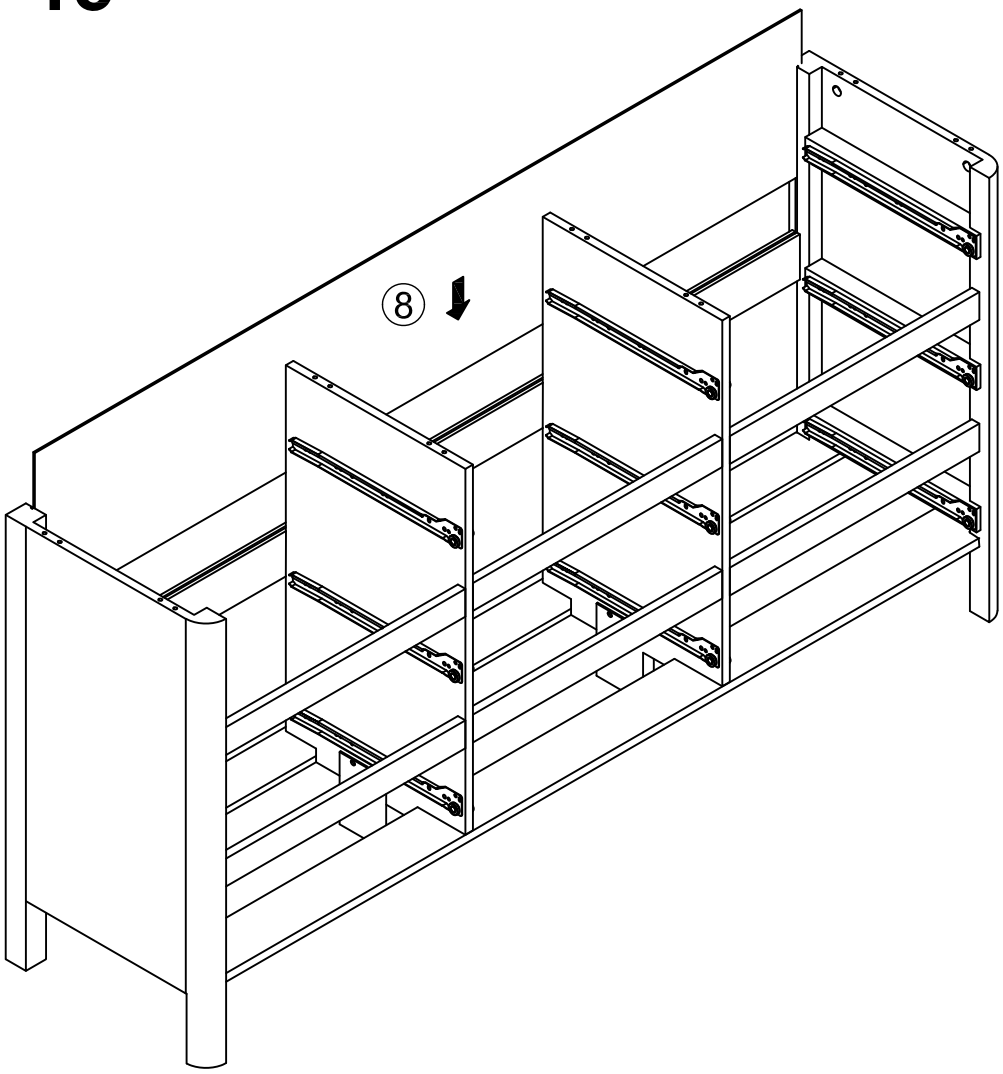

STEP 16

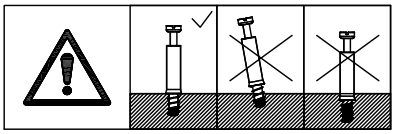

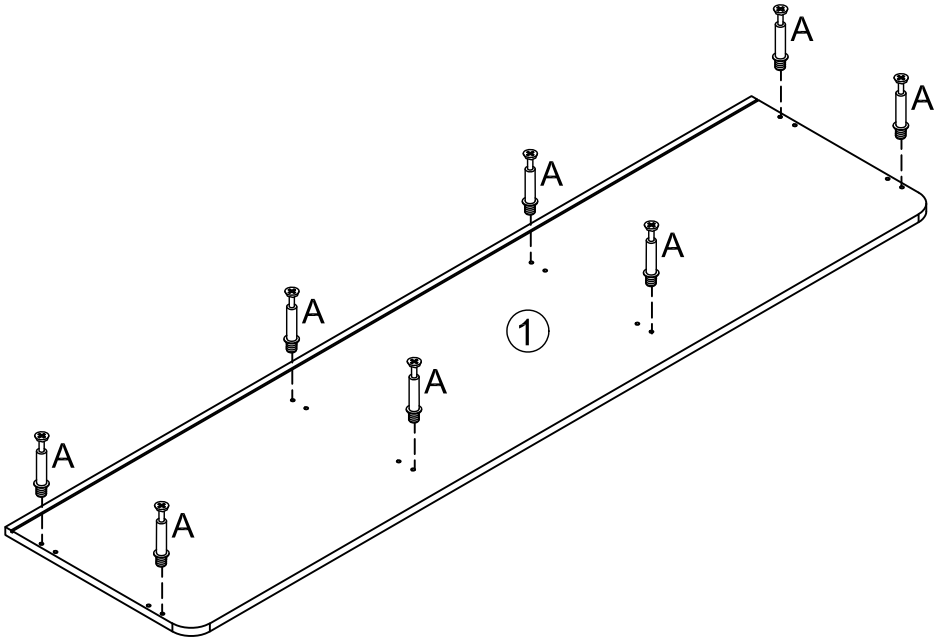

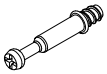

A x8

STEP 17

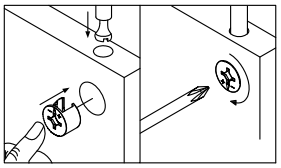

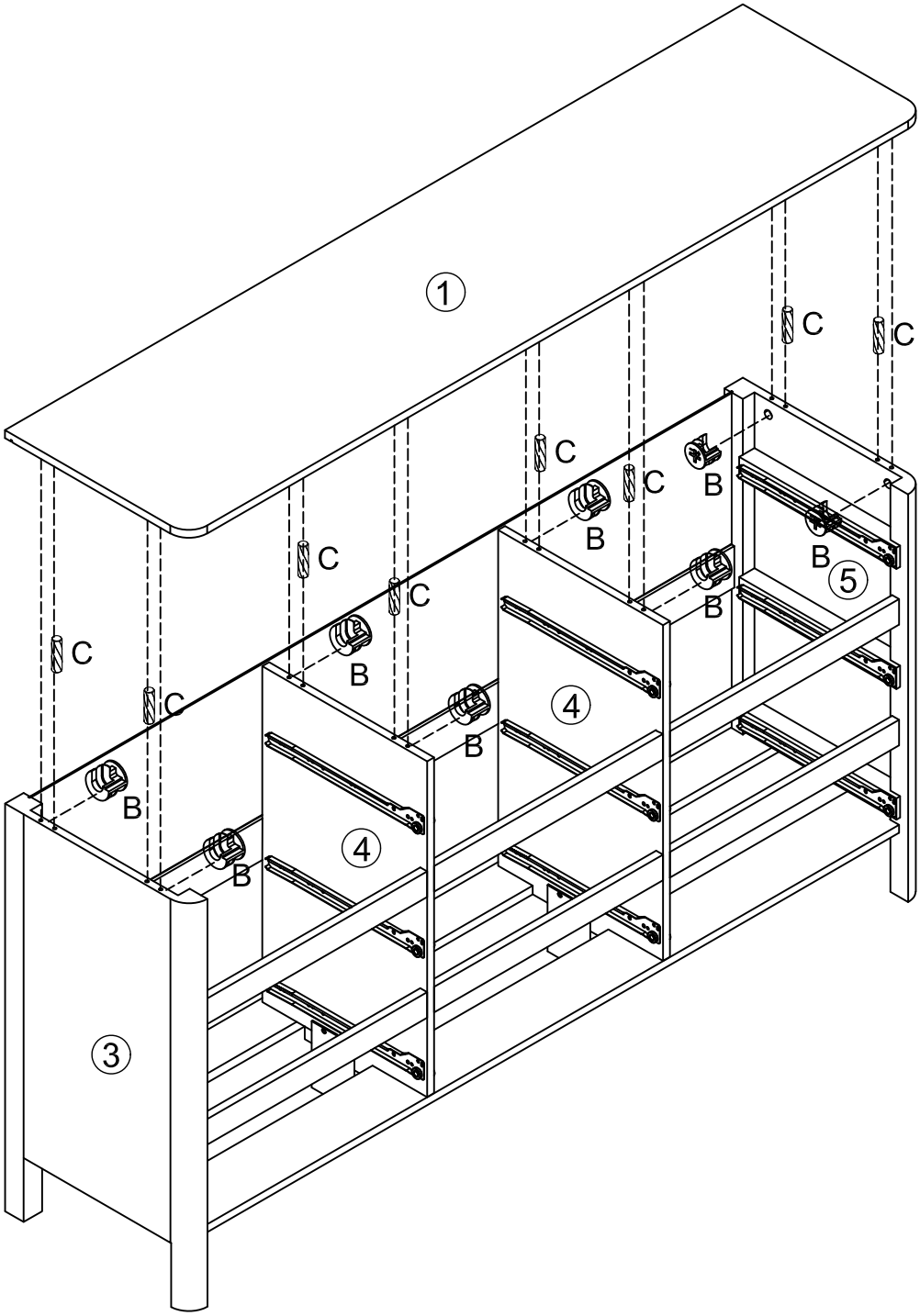

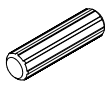

Cx8

M6 x 30 mm

B x8

STEP 18

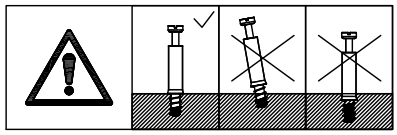

x6

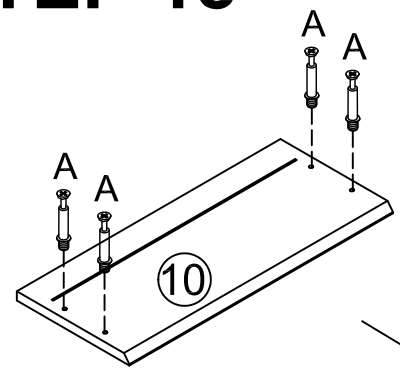

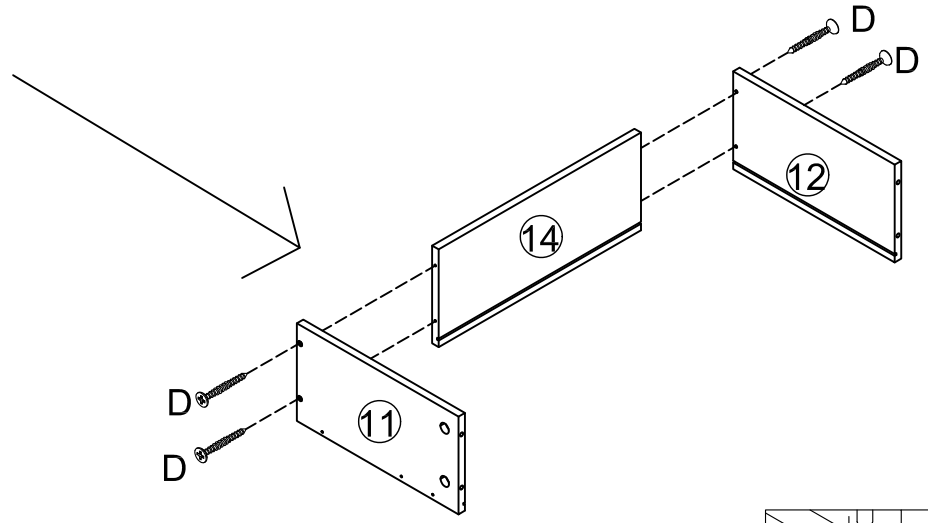

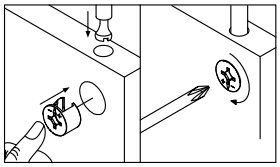

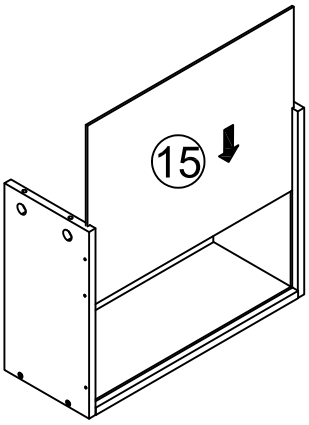

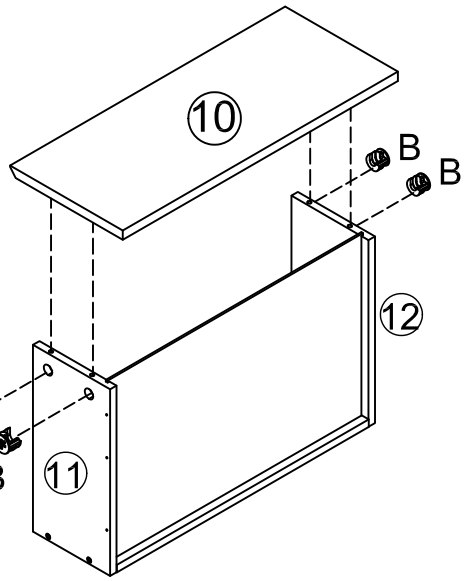

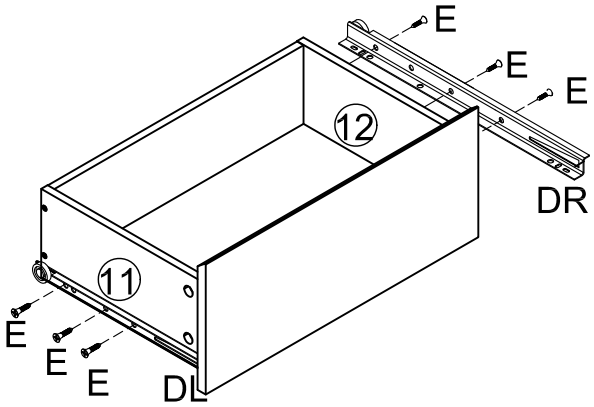

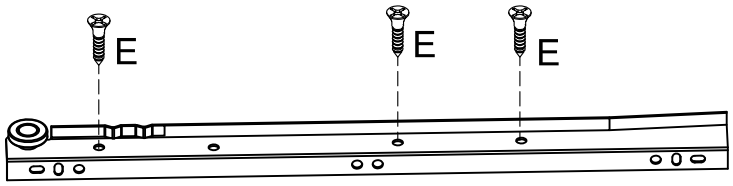

D x24 *M4 x 35 mm*	**B x24**	**A x24**
E x36 *M3 x 12 mm*	**DLx6**	**DRx6**

STEP 19

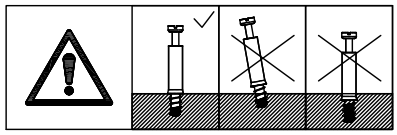

x3

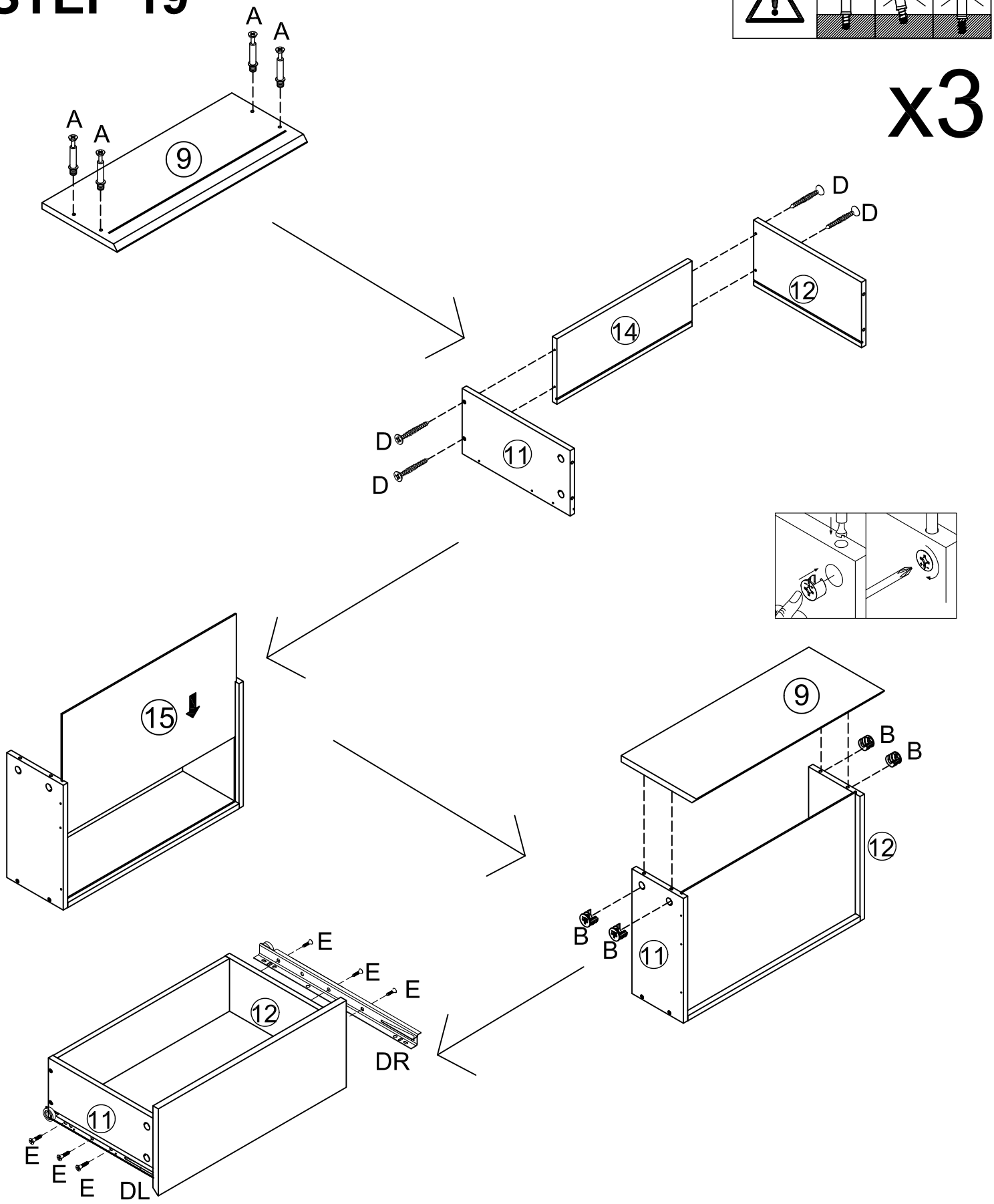

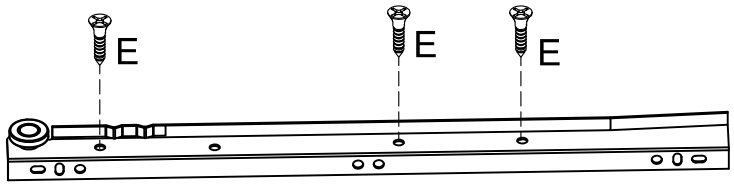

D x12 *M4 x 35 mm*	B x12	A x12
E x18 *M3 x 12 mm*	DLx3	DRx3

STEP 20

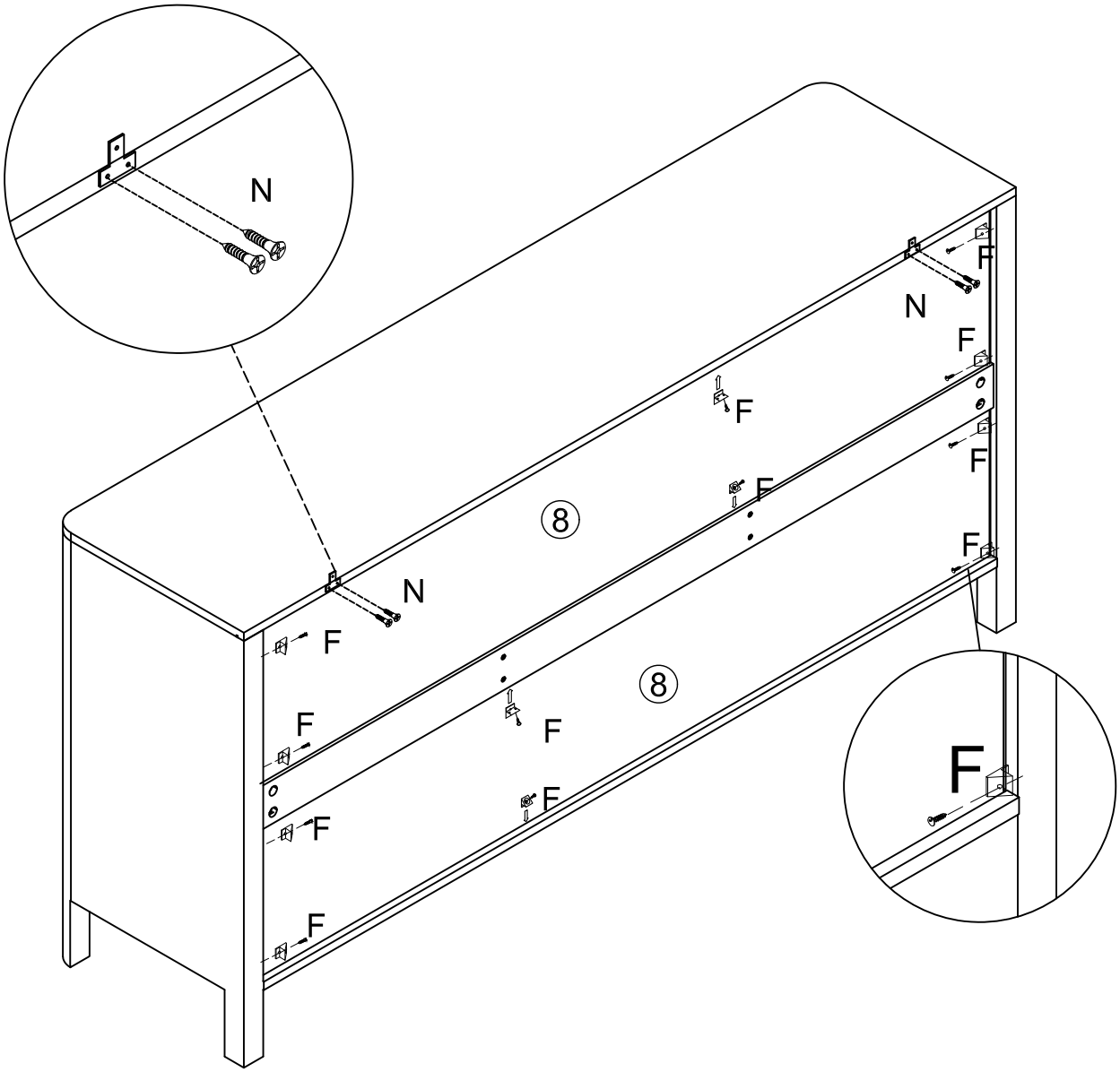

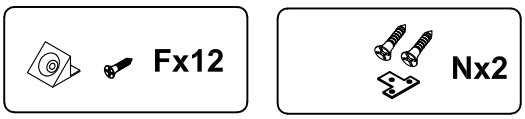

STEP 21

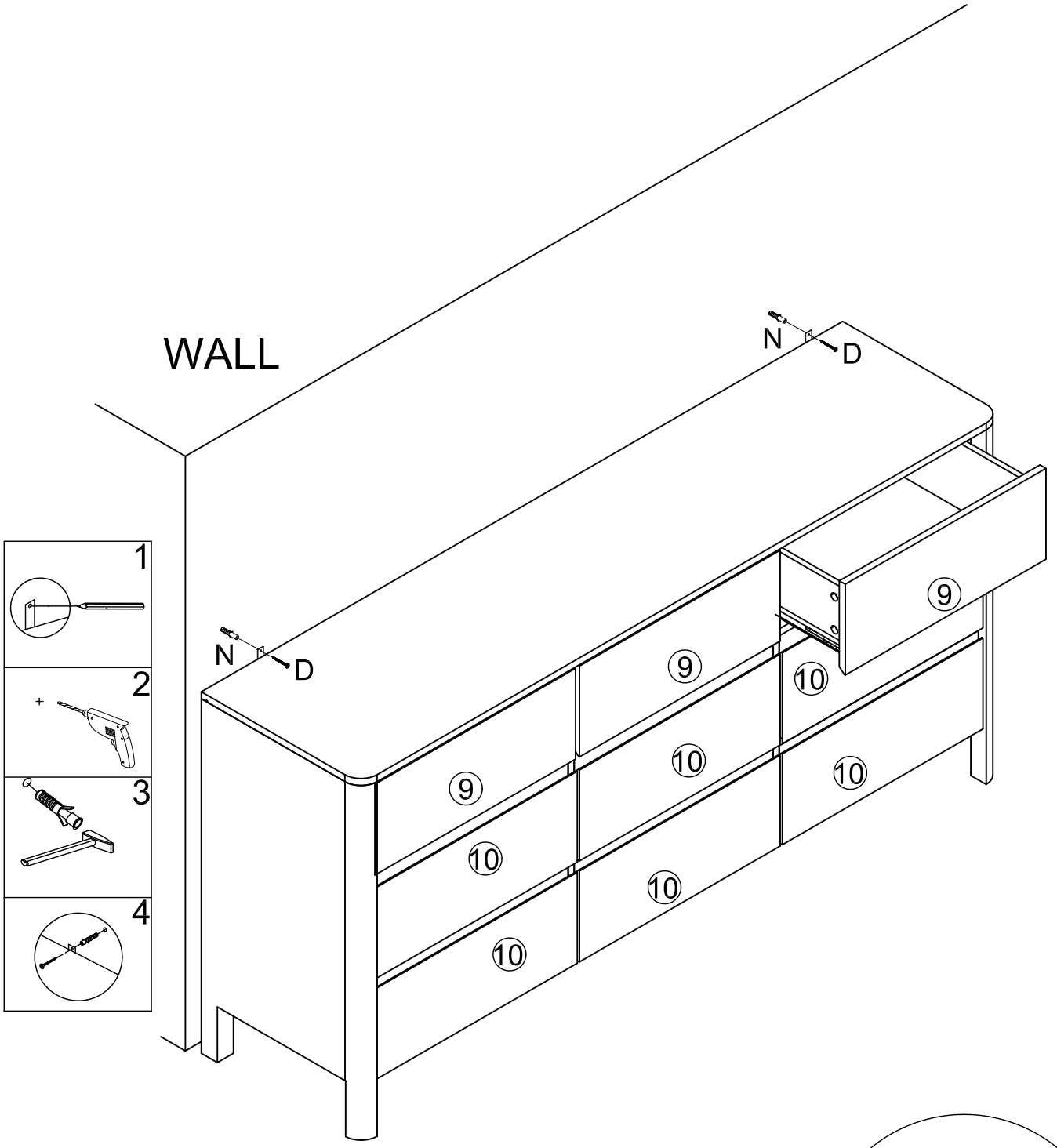
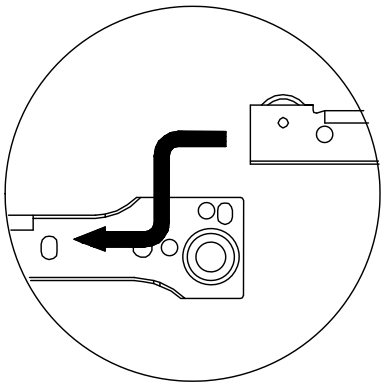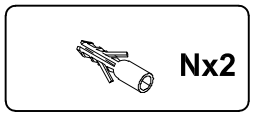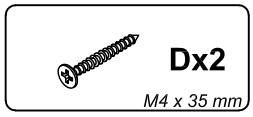
Installation of anti-tipping decorations. Installing the cabinet on the wallusing part(D)andpart(N). Theinstallation position is asshown in the figure below