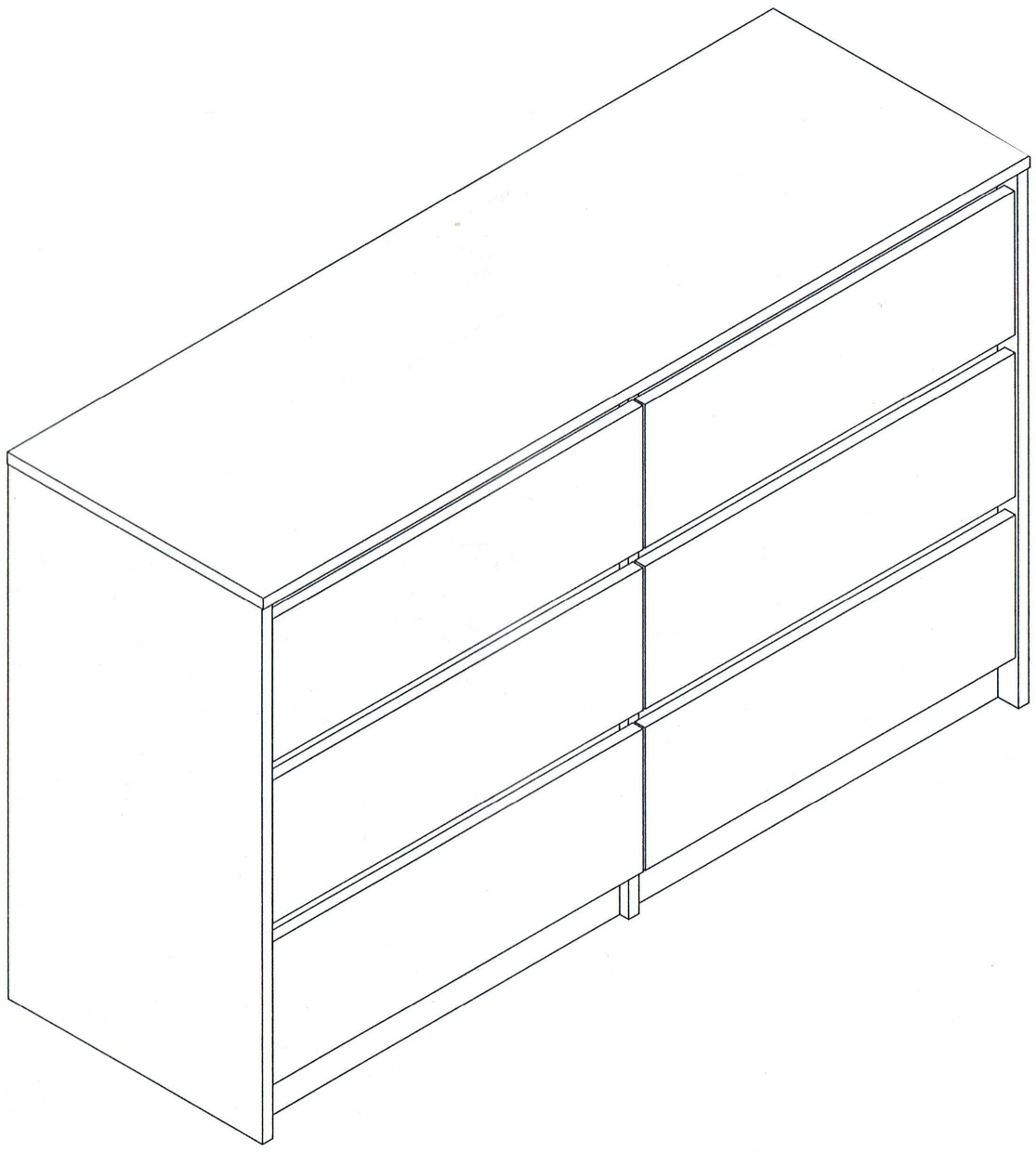

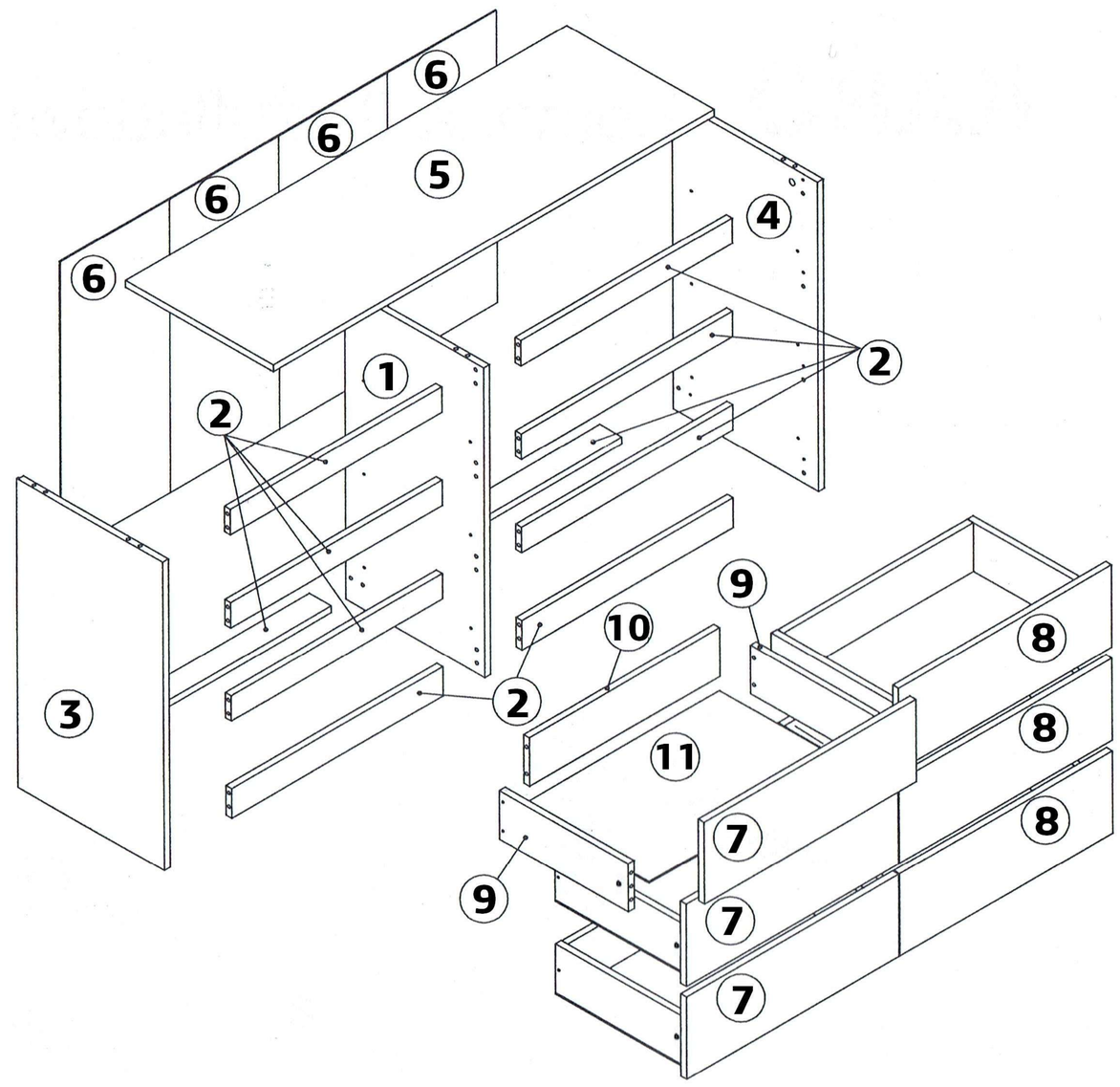

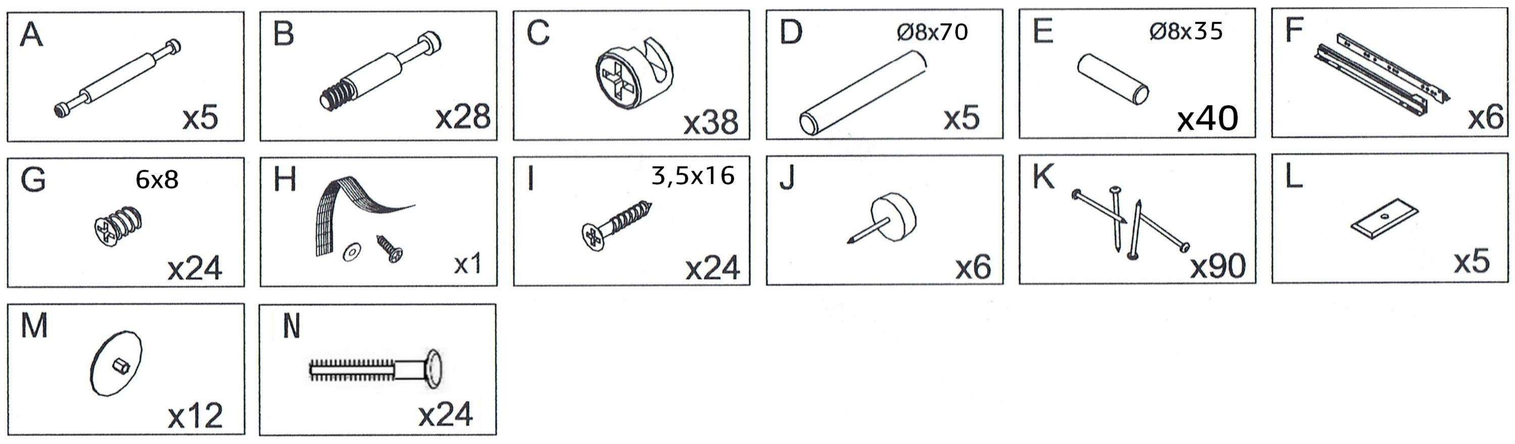

1	x	1
2	x	10
3	x	1
4	x	1
5	x	1
6	x	4
7	x	3
8	x	3
9	x	12
10	x	6
11	x	6

1

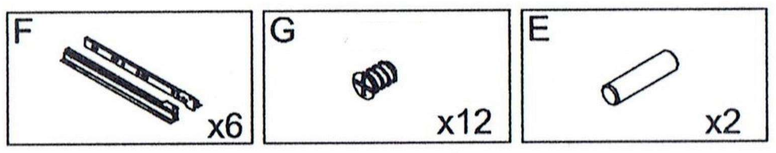

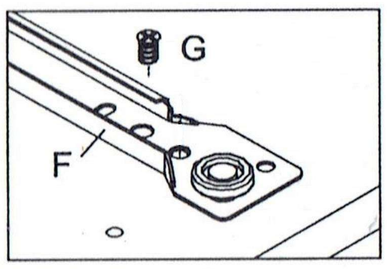

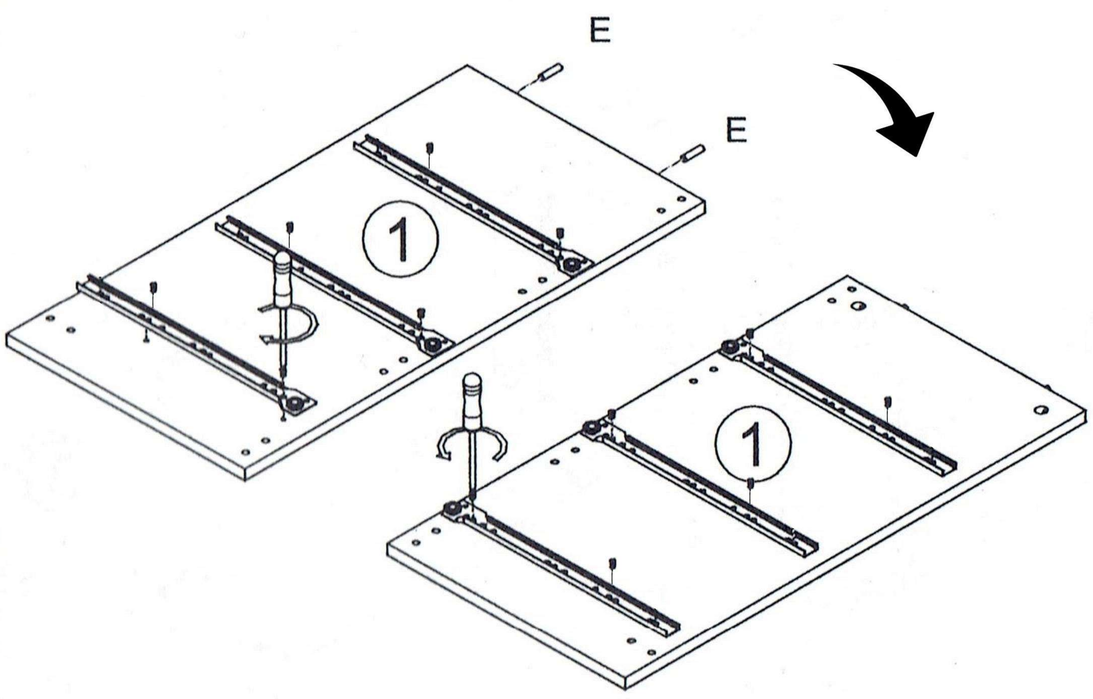

2

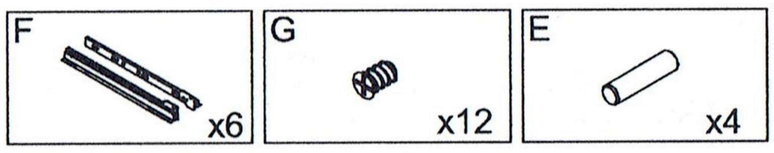

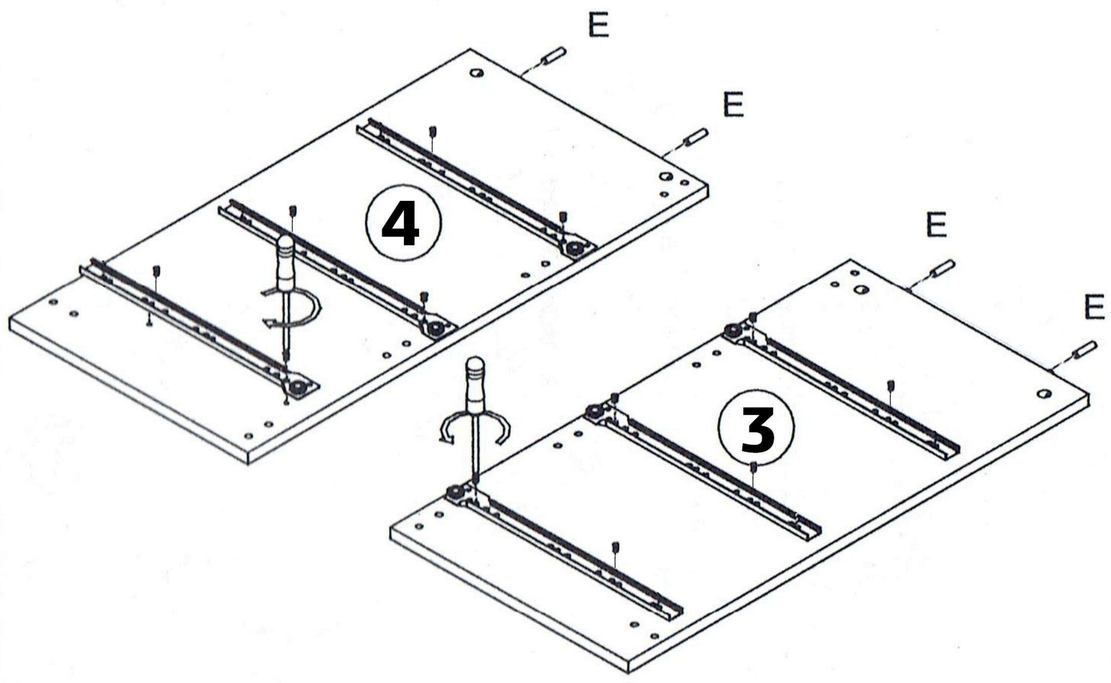

3

B x10

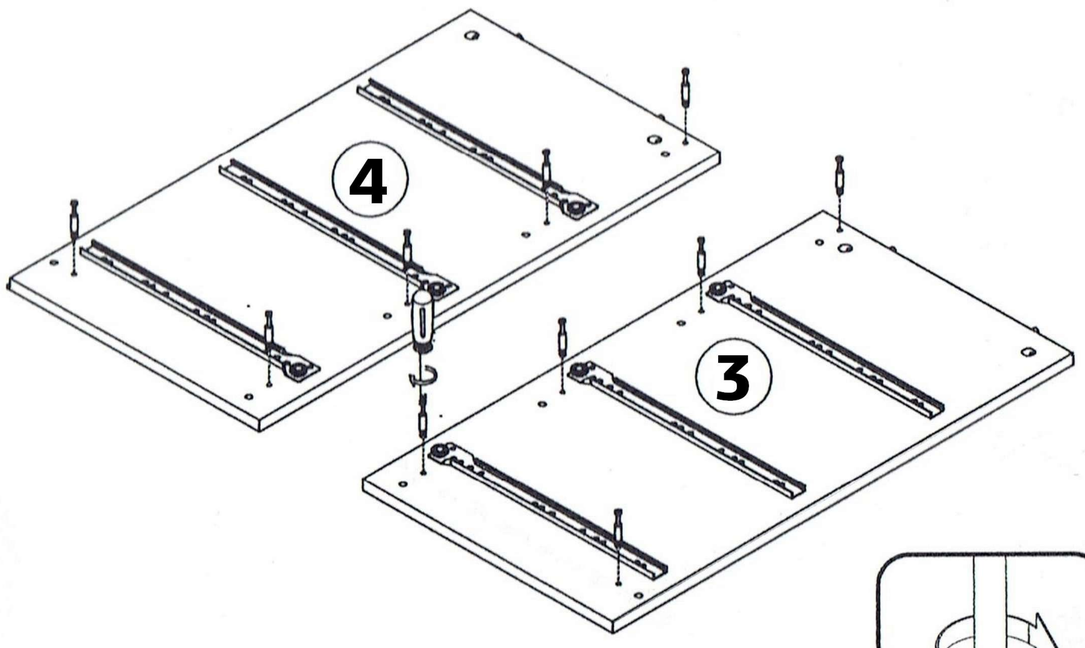

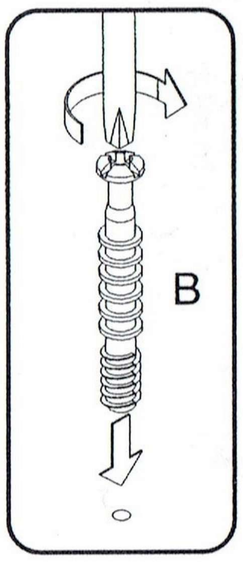

4

E x10

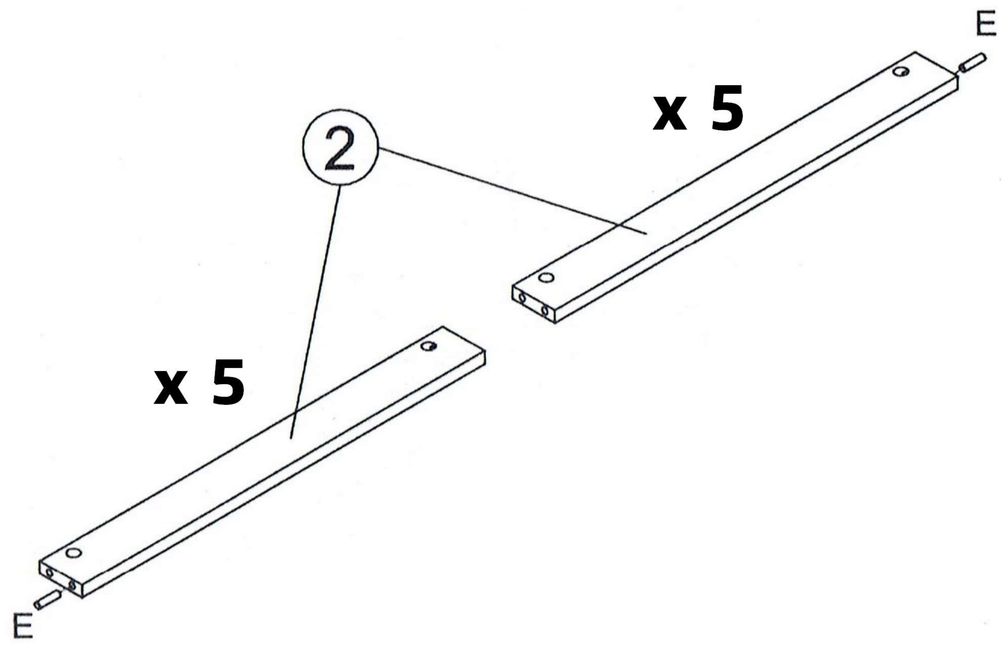

5

A x5

D x5

C x5

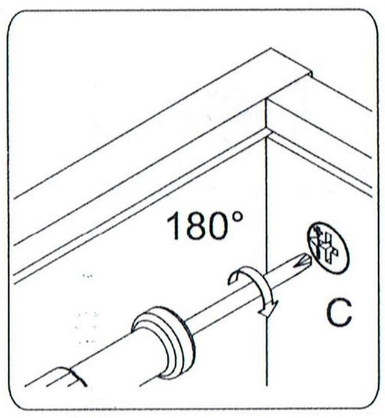

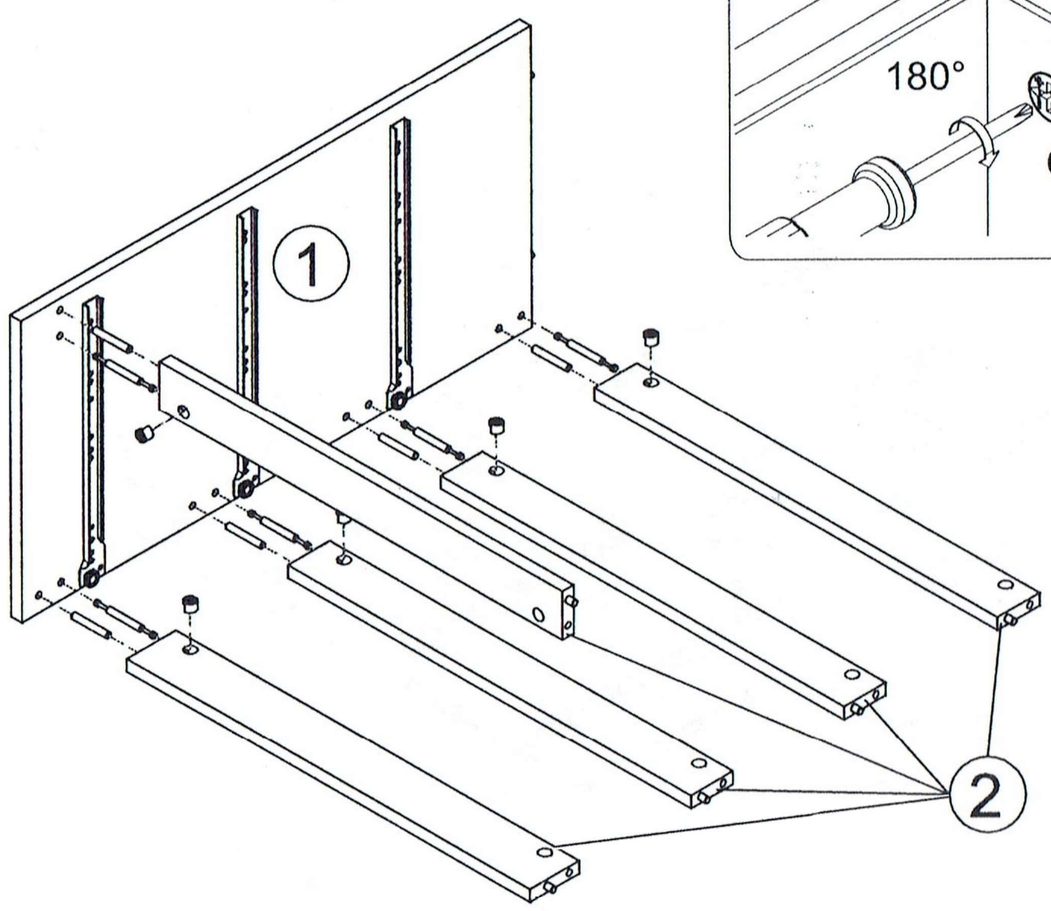

6

C x5

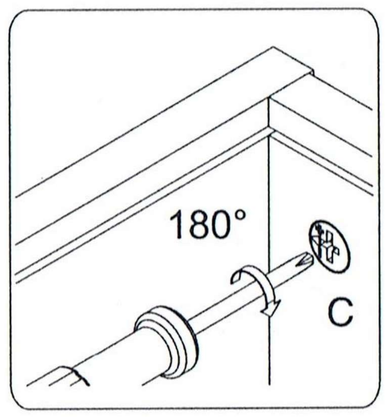

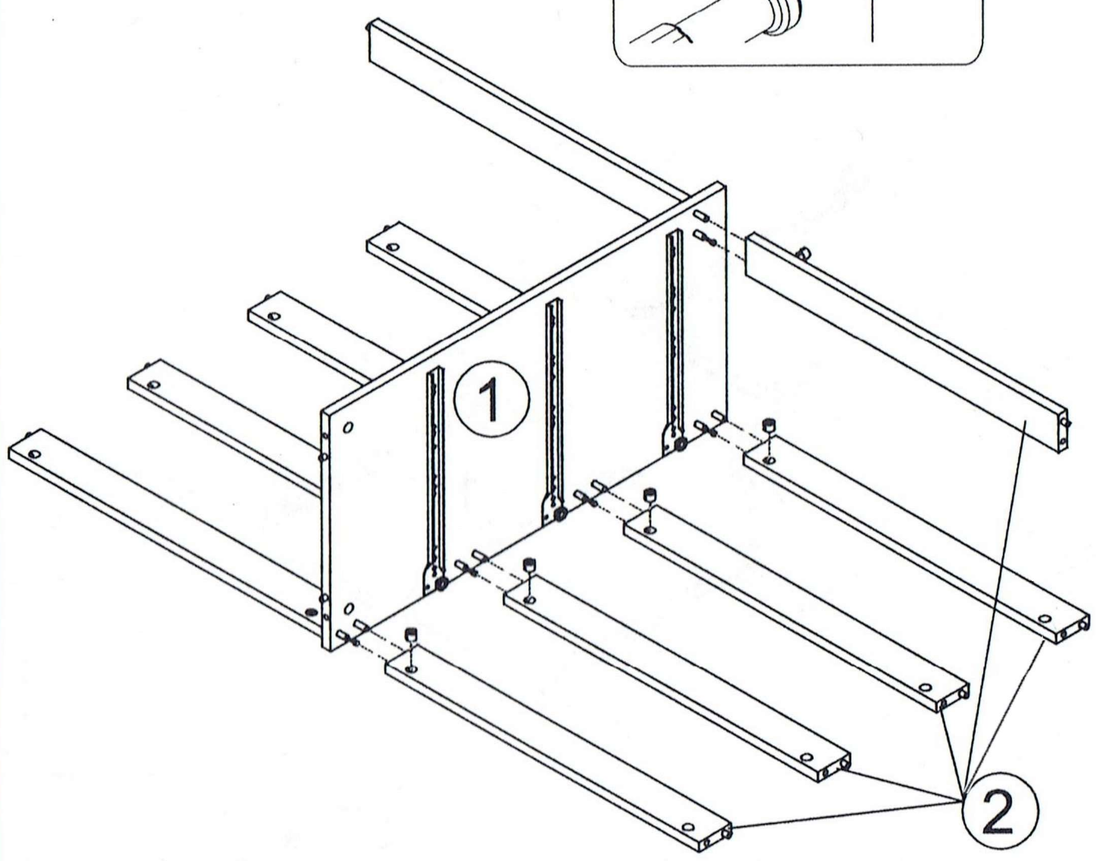

7

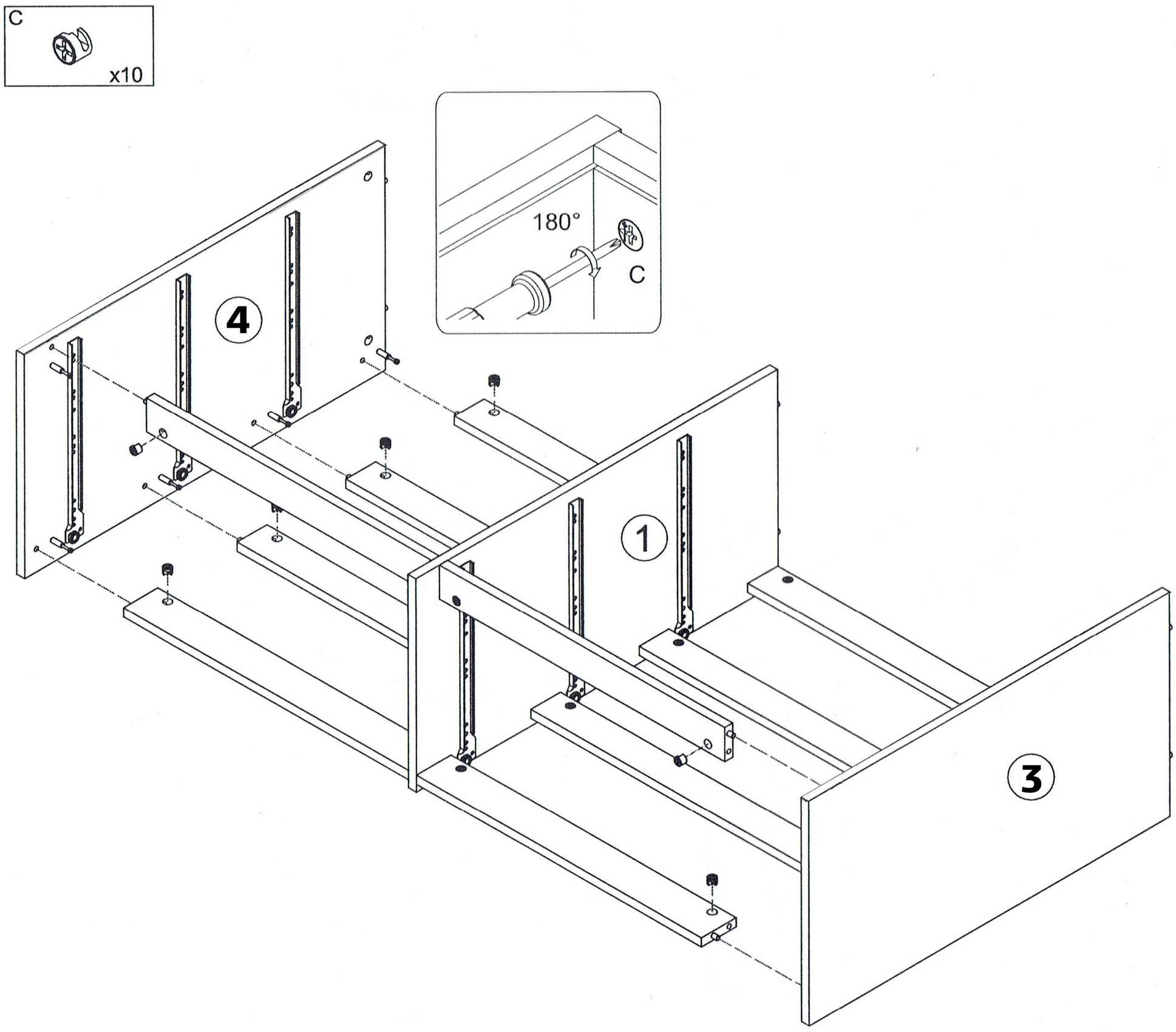

8

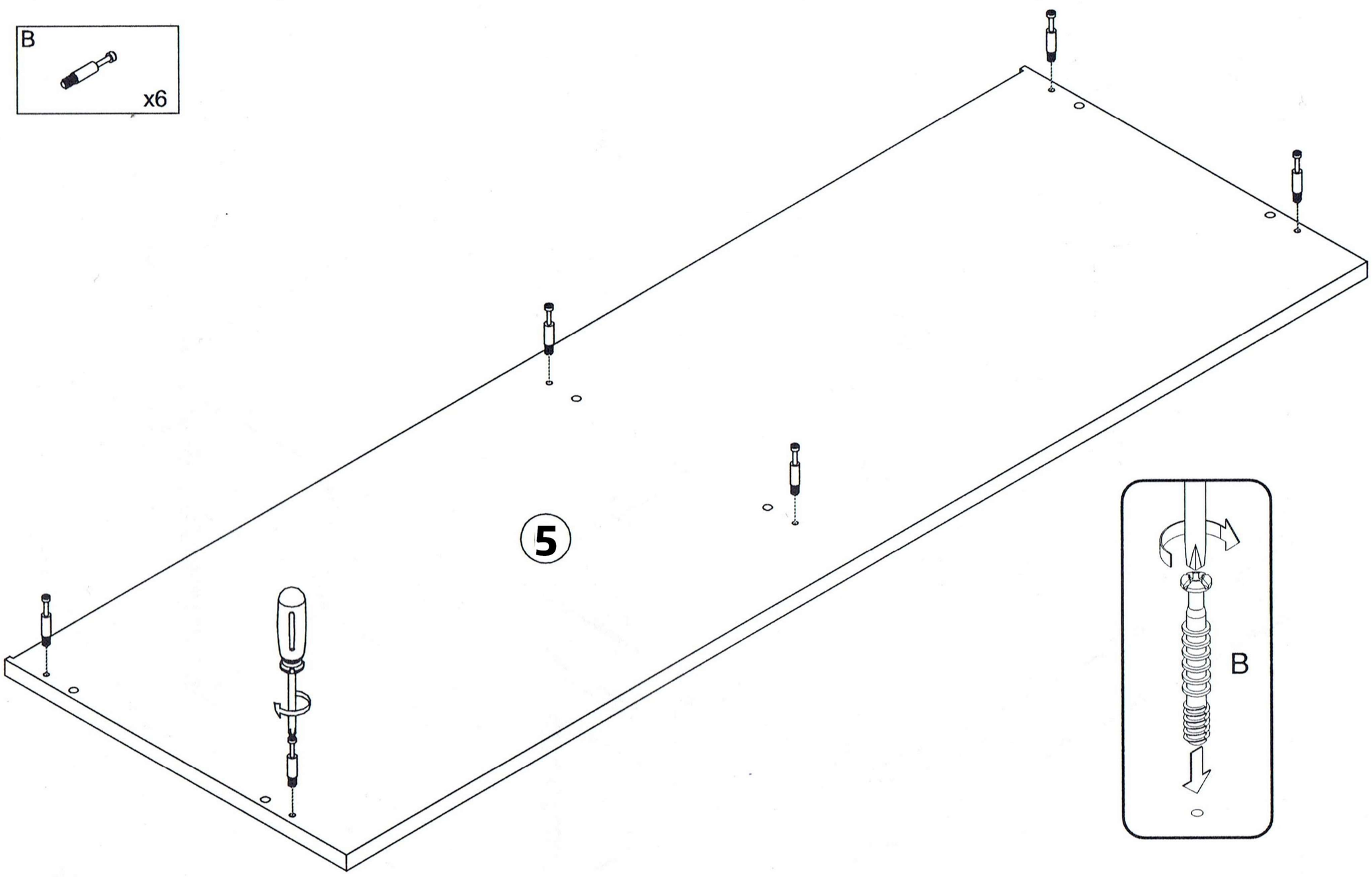

9

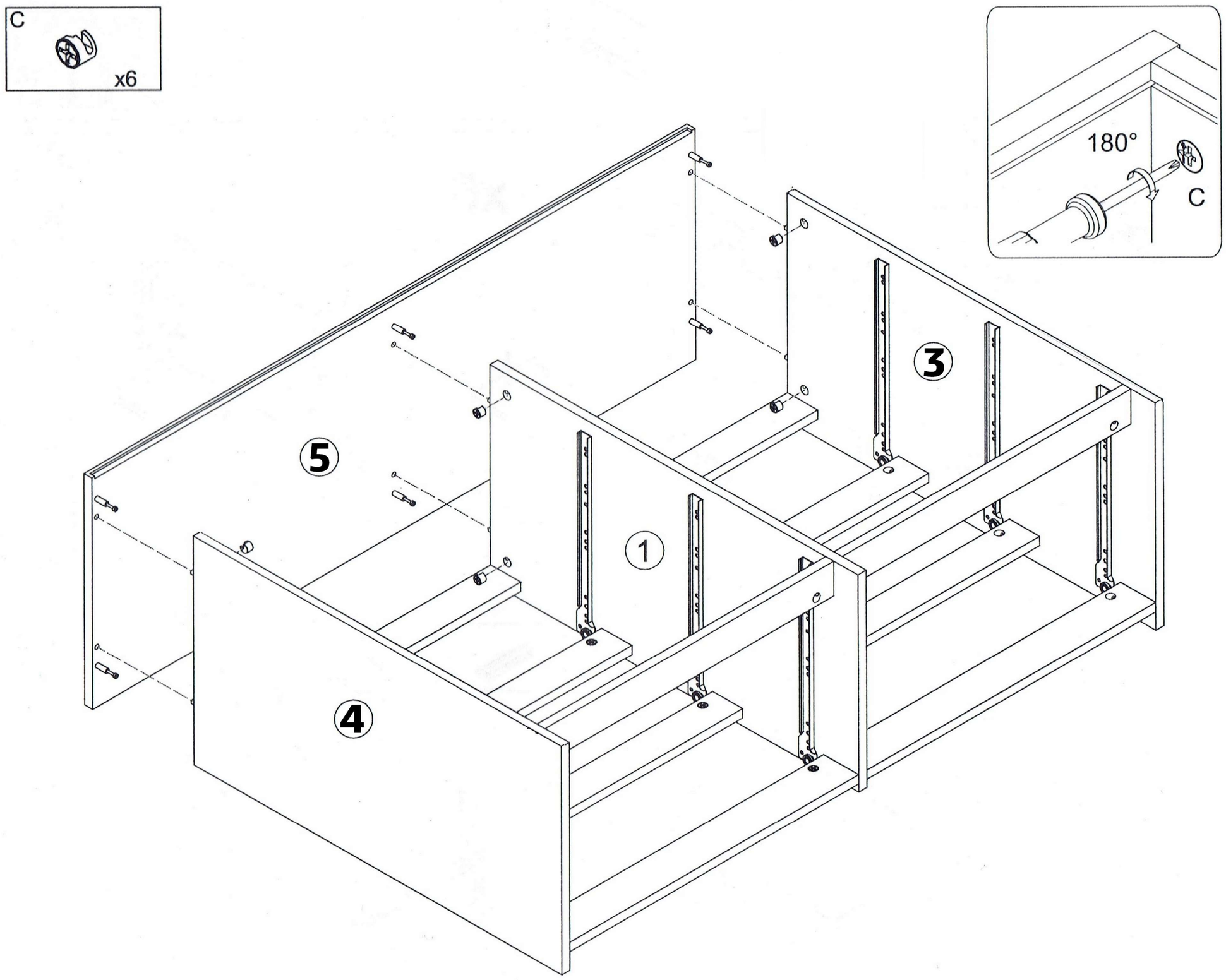

10

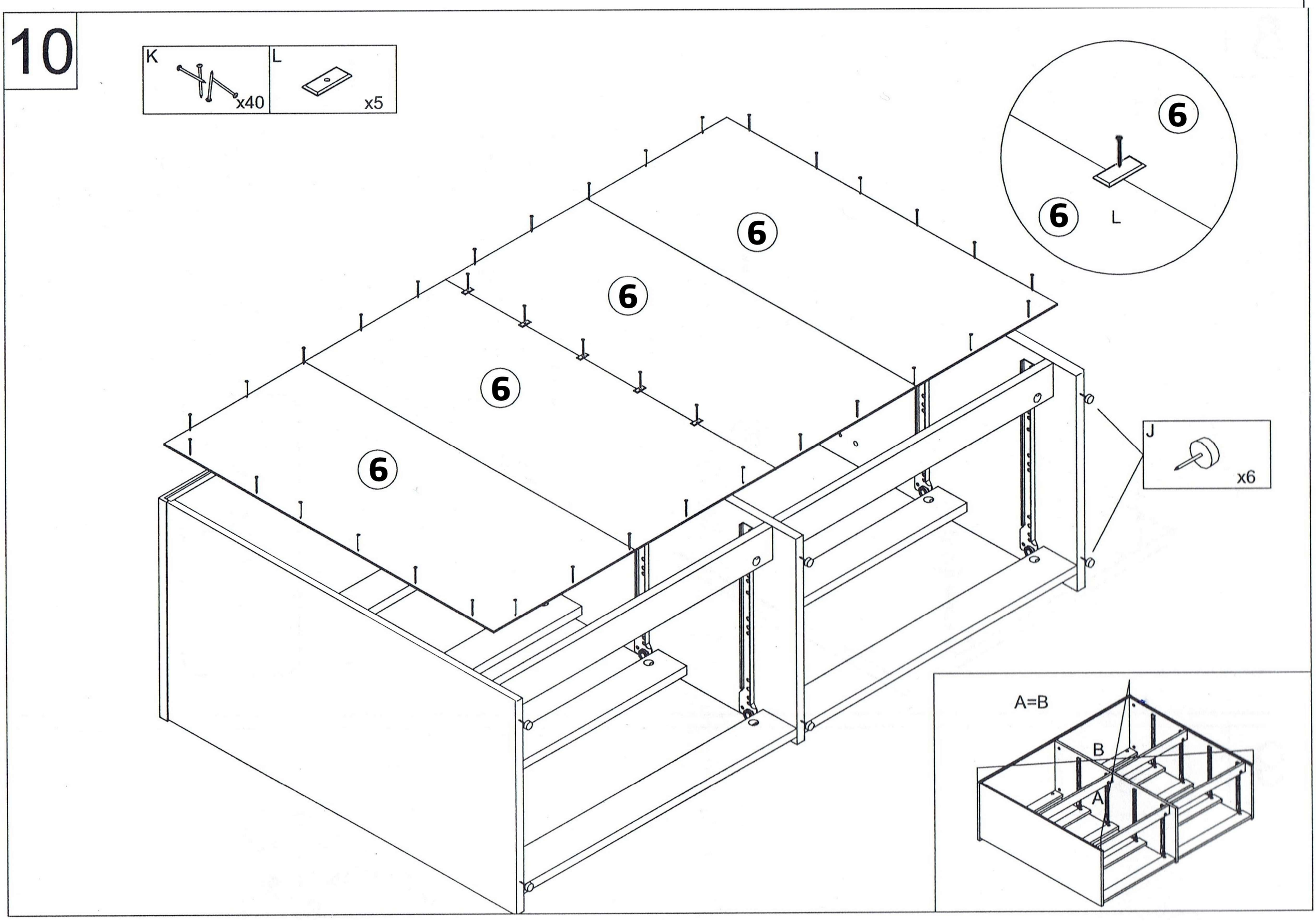

11

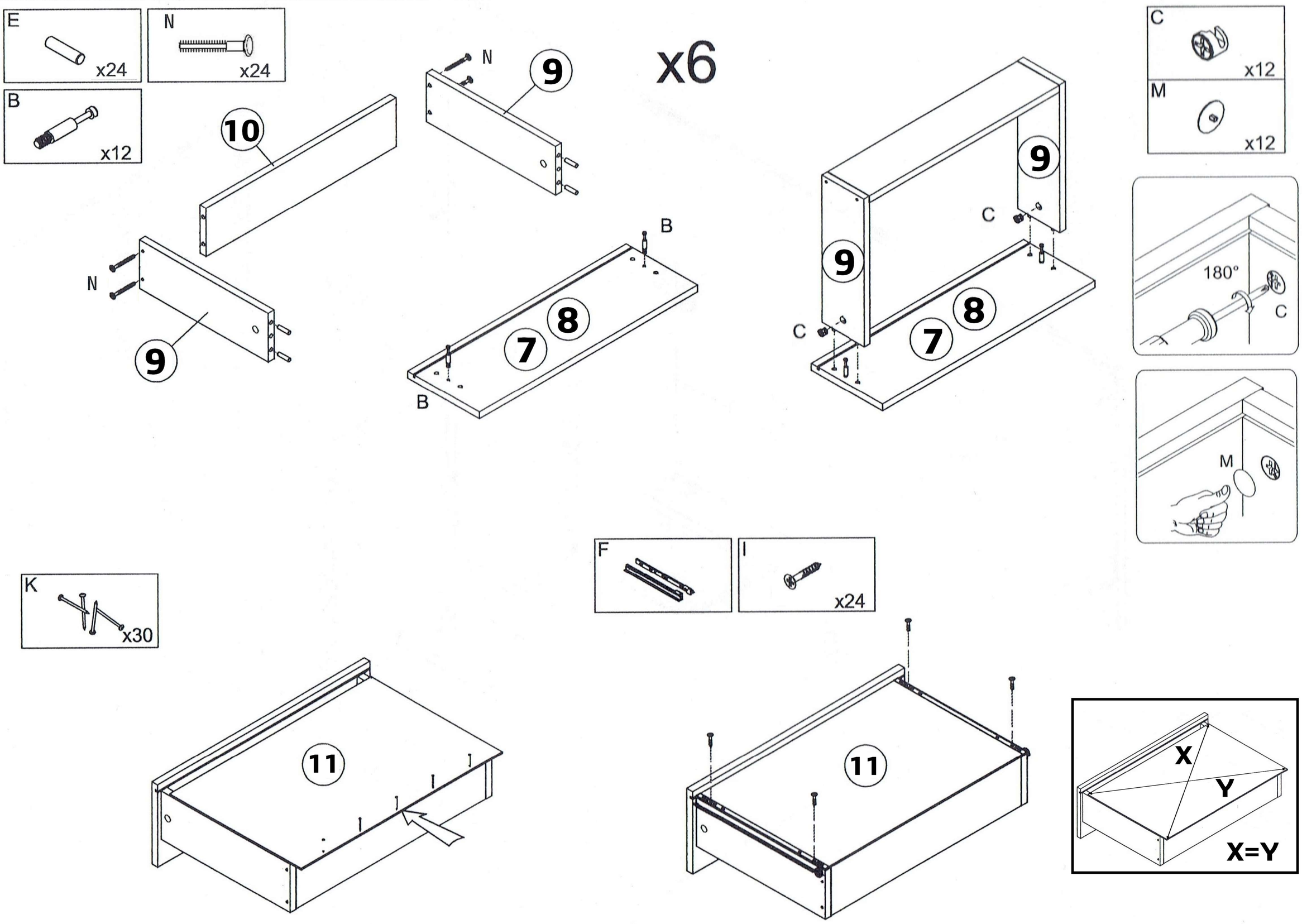
E
x24
N
x24
B
x12
10
N
9
x6
N
9
B
8
7
B
9
C
9
8
7
C
C
x12
M
x12
180°
C
M
K
x30
F
I
x24
11
11
X
Y
X=Y

12

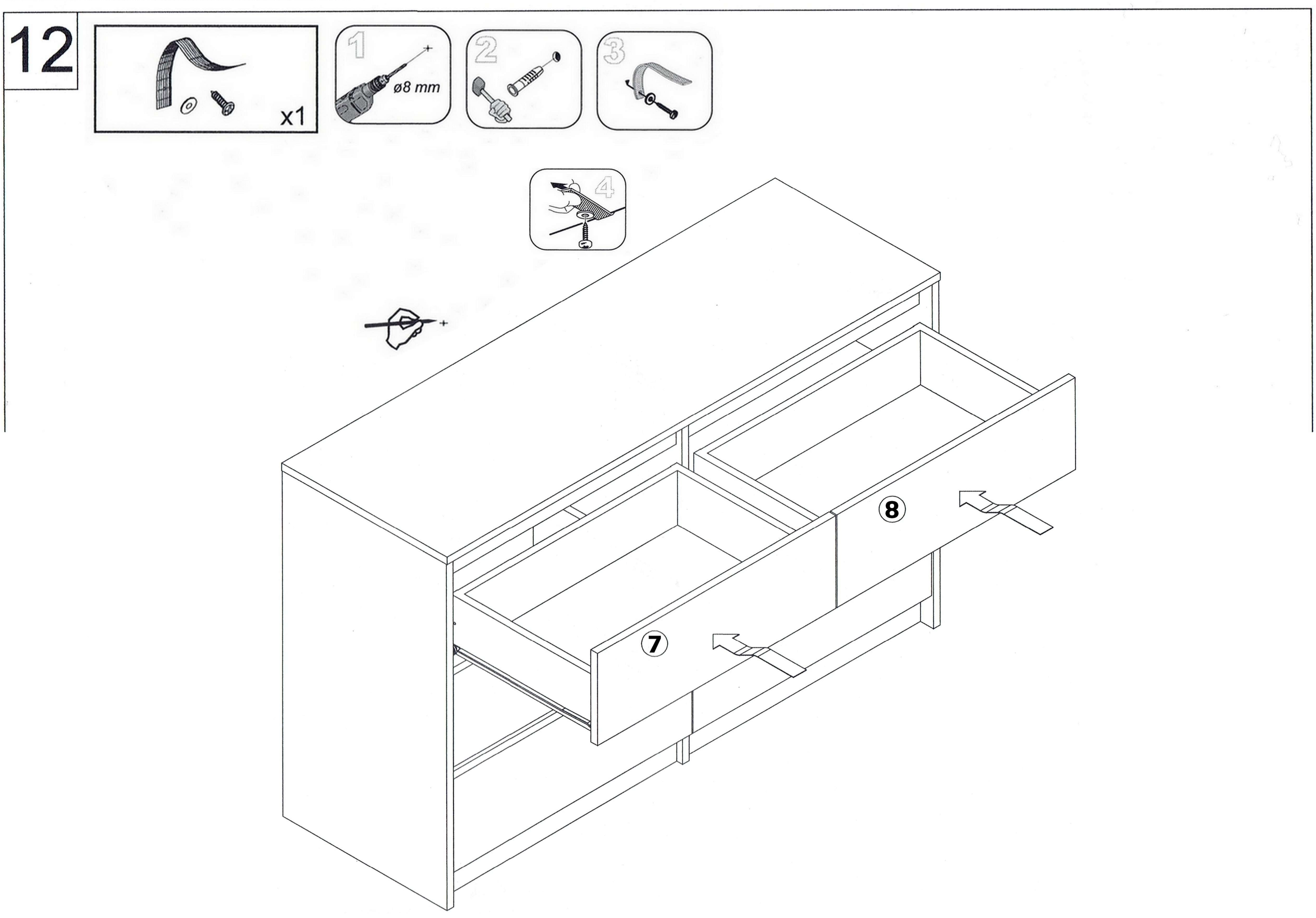
x1
1
ø8 mm
2
3
4
8
7