User's Manual

Bed Frame

(Queen Size)

(Full Size) V1.0

EN | ES

Contact us first if you have any problems, we would do better than official service. Replacement for missing or damaged parts will be shipped ASAP!

EN | **ES**

Si tiene algún problema con su producto o pedido, póngase en contacto con nosotros antes de consultar con el servicio de atención al cliente, le resolveremos su problema con mayor brevedad. ¡Reemplazamos piezas perdidas o dañadas enviándolas rápidamente

Assembly Instruction

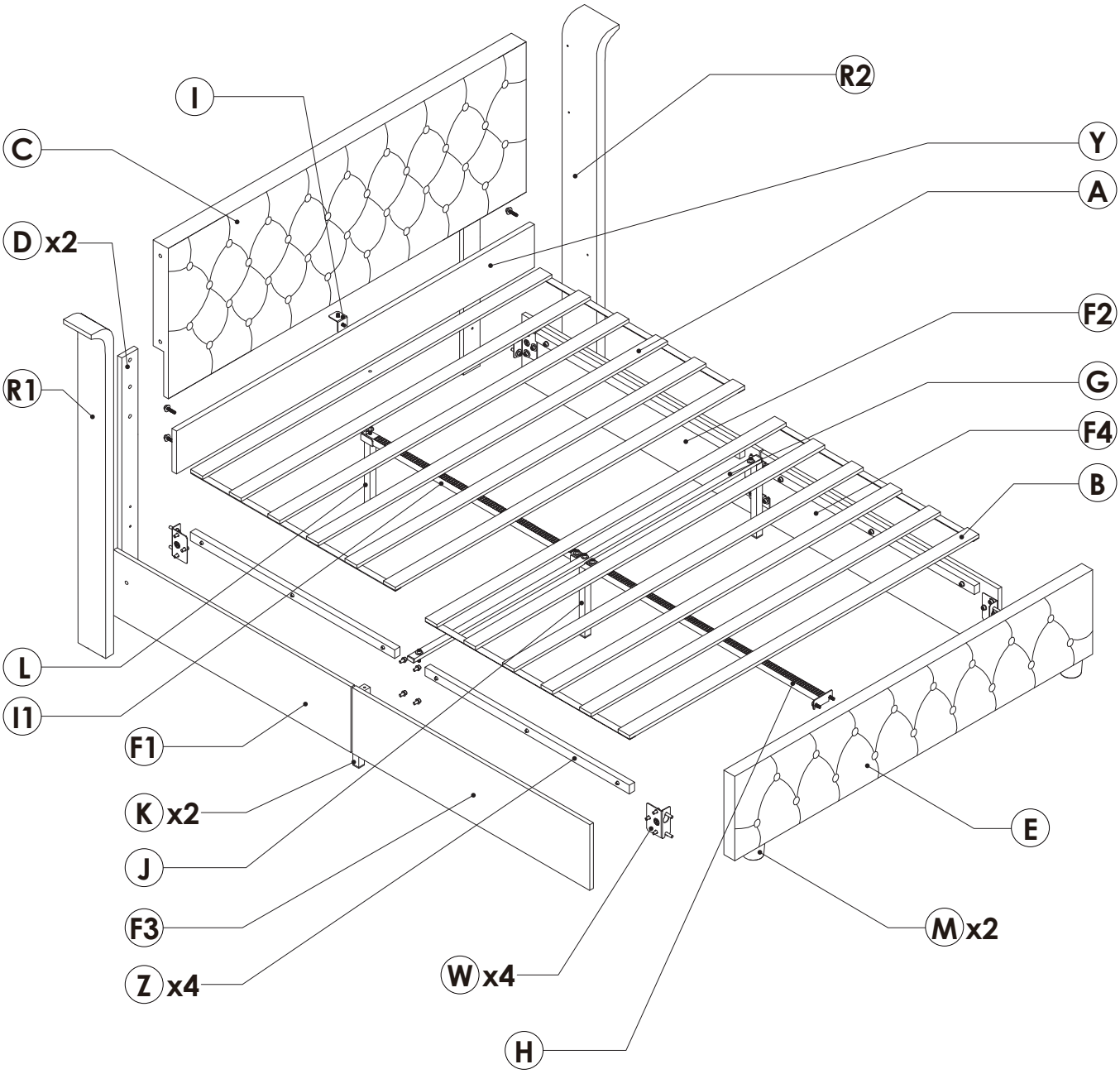

Assembly Instruction

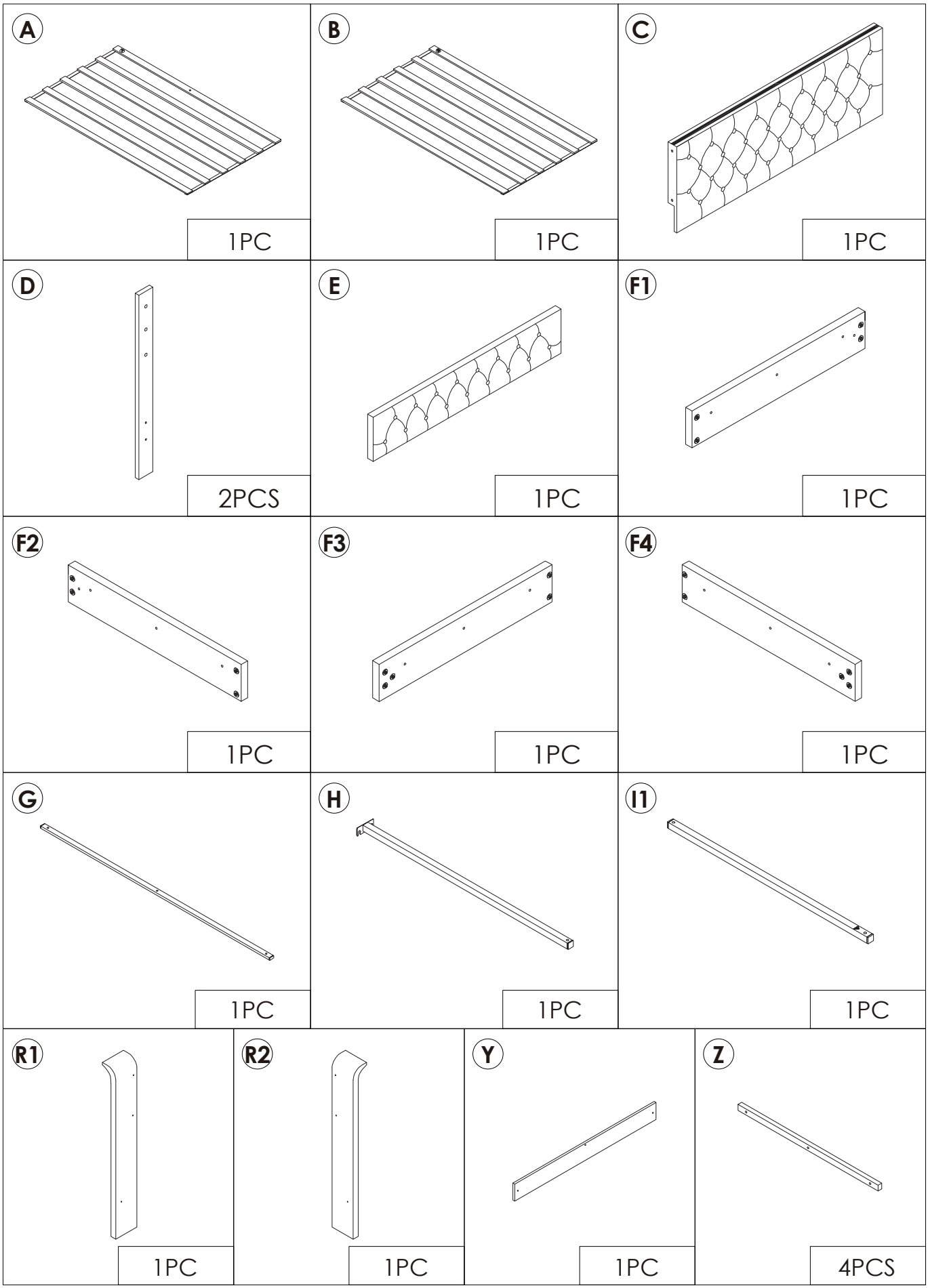

Assembly Instruction

I 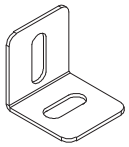 1PC	J 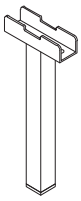 1PC	K 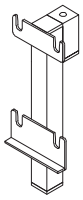 2PCS
L 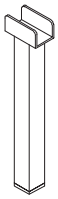 1PC	M 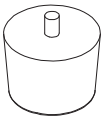 2PCS	N 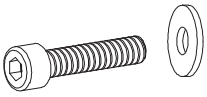 M8×38mm 27+2PCS
O 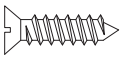 8+1PCS	P 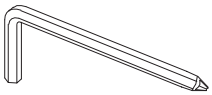 M8 1PC	Q 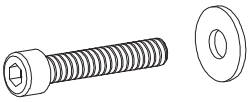 M8×45mm 3PCS
W 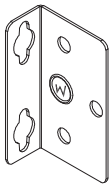 4PCS	W1 1PC	X1 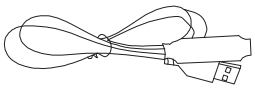 1PC

Assembly Instruction of (Bed)

STEP 1

Tighten the NO.1 first
then tighten NO.2 & NO.3.

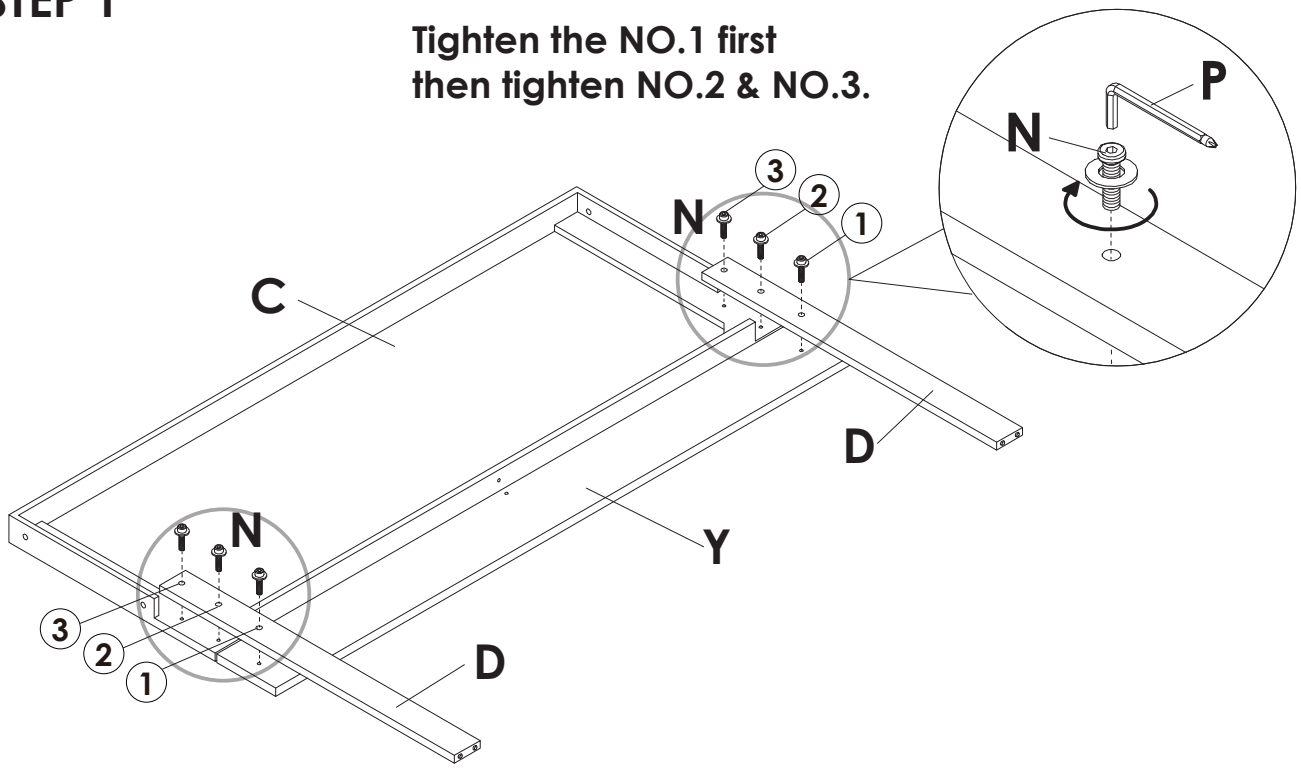

	N x 6PCS
	P x 1PC

STEP 2

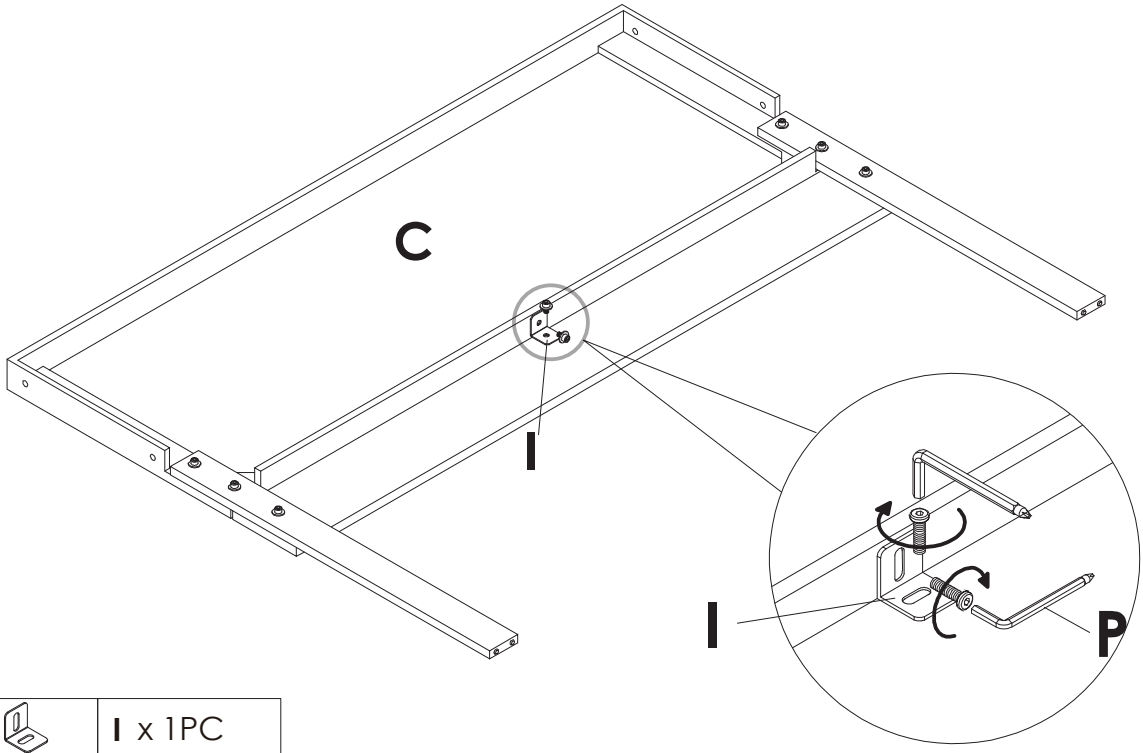

	I x 1PC
	P x 1PC

Assembly Instruction of (Bed)

STEP 3

Connect **F1** and **F3** together with **K**, and lock the iron frame, there are 2 holes on the inside of the board. Lock **W** on both sides of the board, with 3 holes on each side.

Note: The installation direction is as shown in the picture.

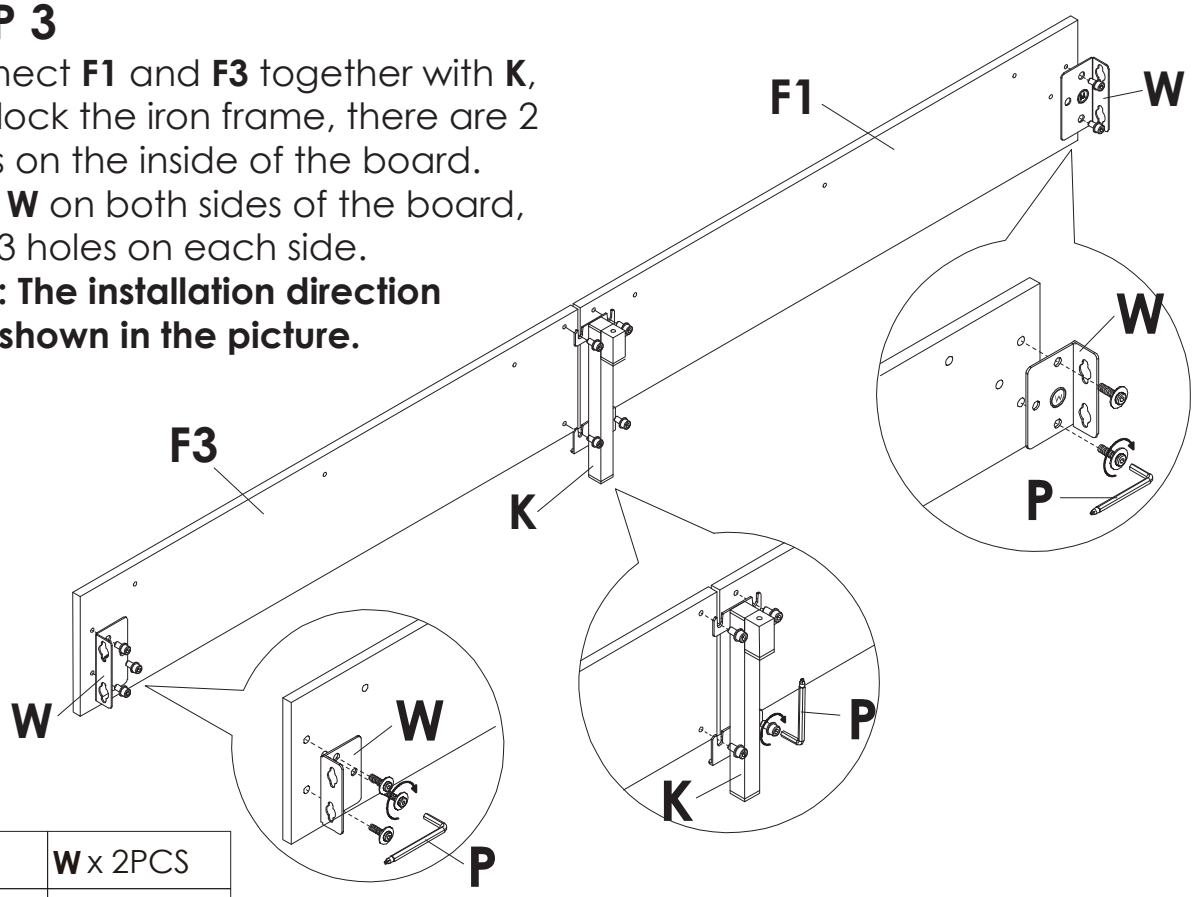

	W x 2PCS
	P x 1PC

STEP 4

Connect **F2** and **F4** together with **K**, and lock the iron frame, there are 2 holes on the inside of the board. Lock **W** on both sides of the board, with 3 holes on each side.

Note: The installation direction is as shown in the picture.

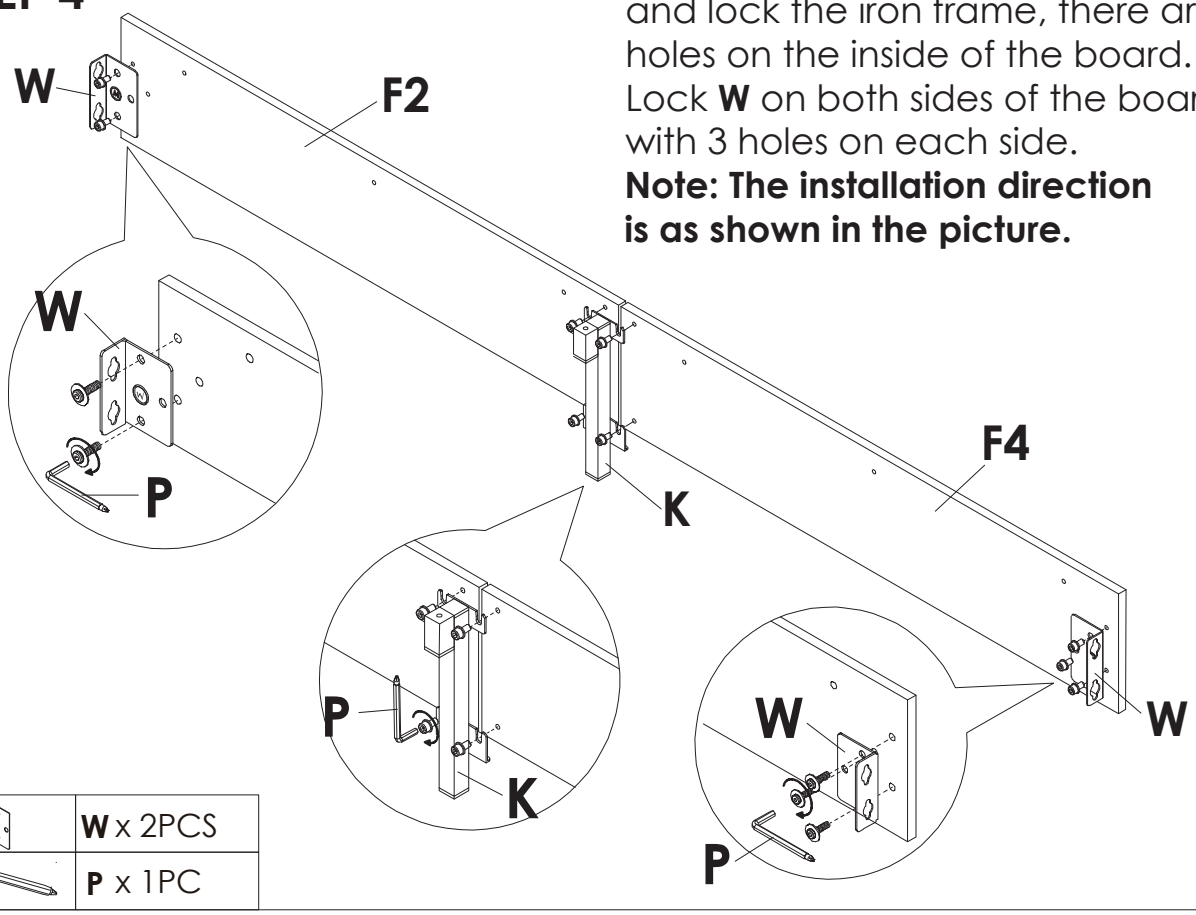

	W x 2PCS
	P x 1PC

Assembly Instruction of (Bed)

STEP 5

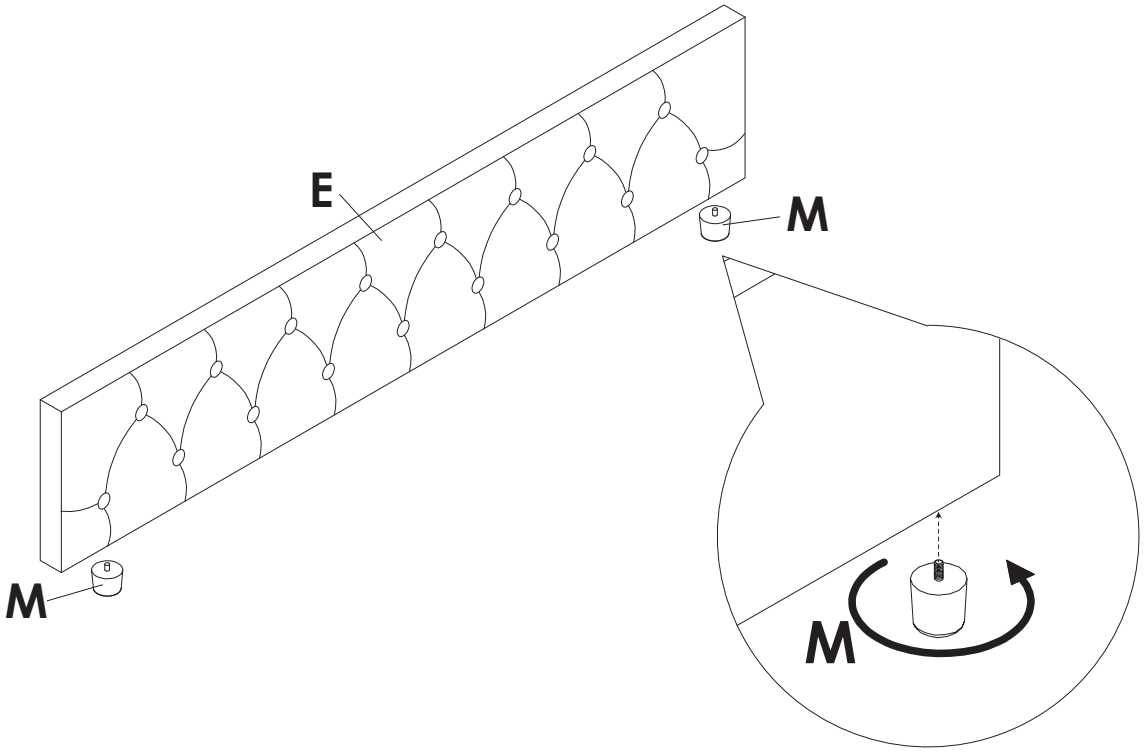

STEP 6

Loosen the screw of headboard side leg and both sides of footboard, hanging the bracket and do not lock the innerscrew so tight.

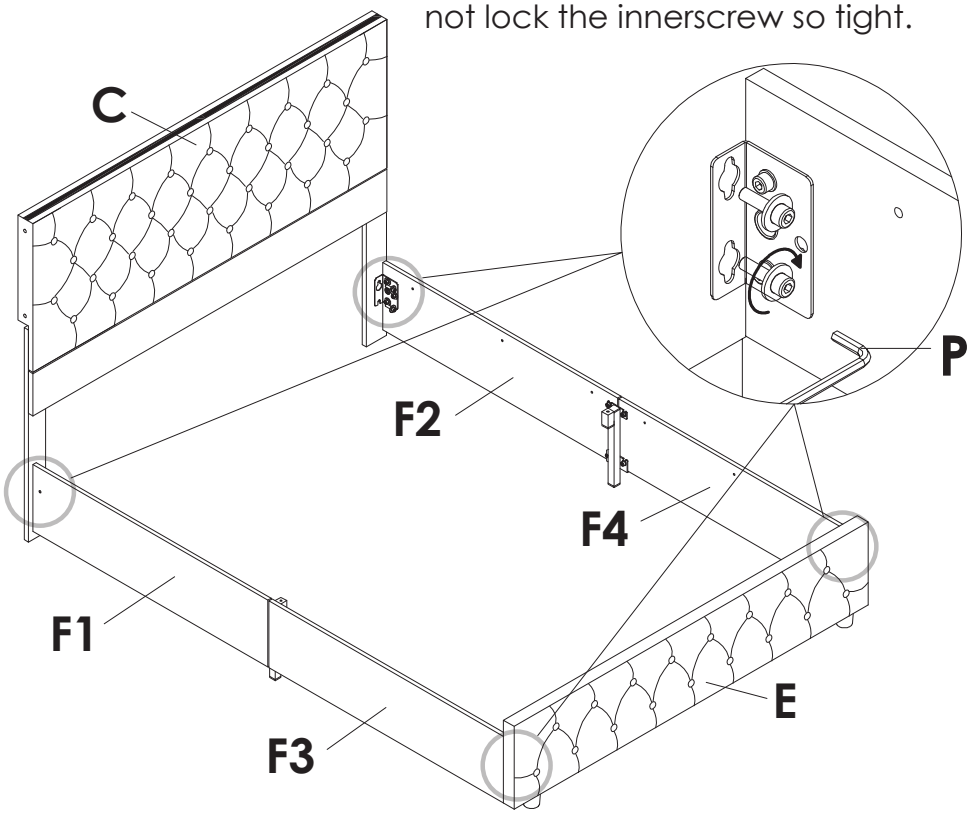

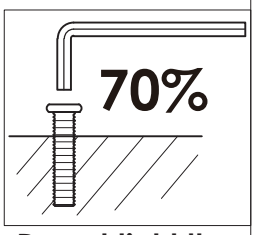

Do not tight the innerscrew

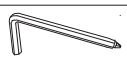

P x 1PC

Assembly Instruction of (Bed)

STEP 7

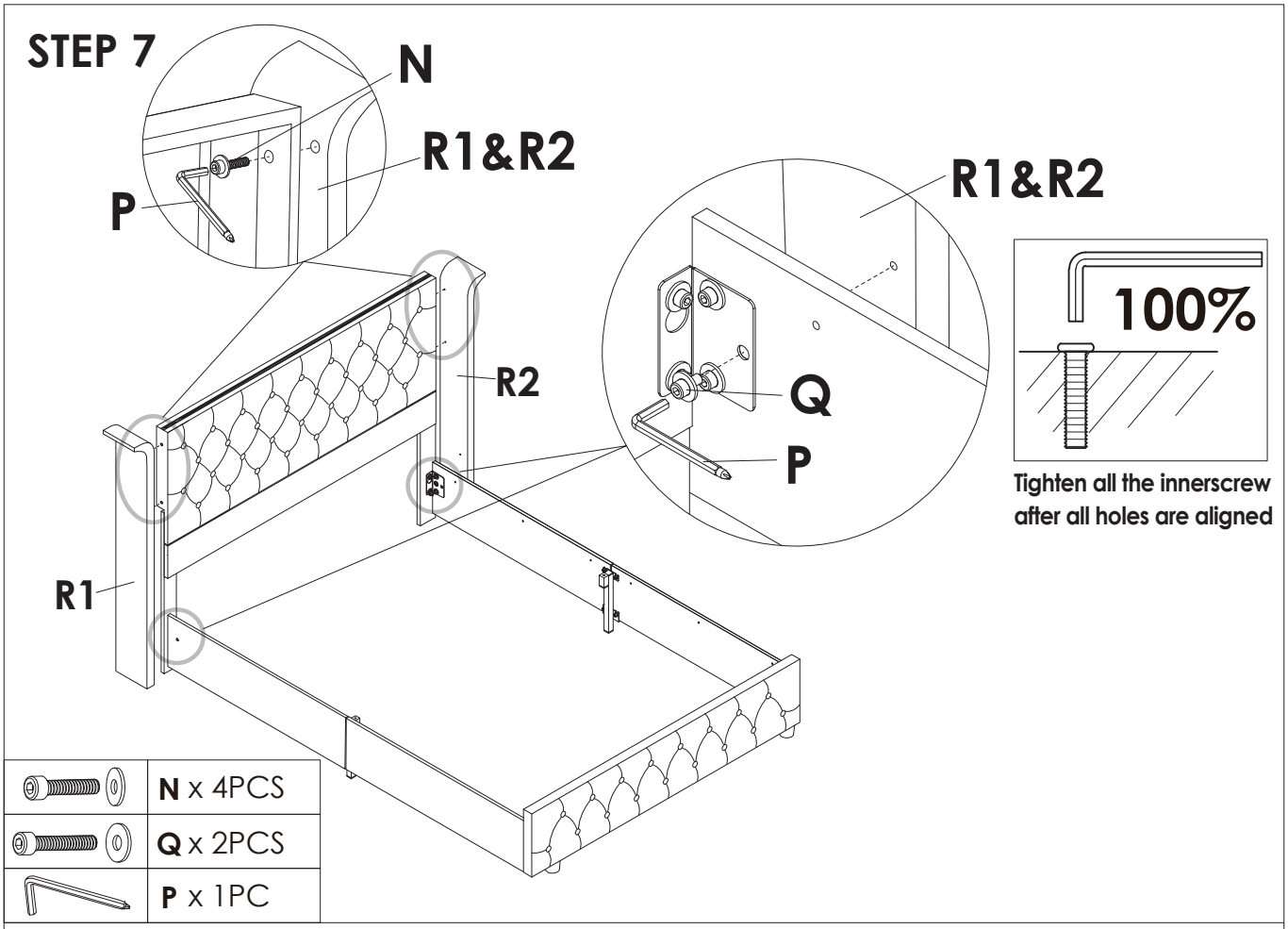

Tighten all the innerscrew after all holes are aligned

	N x 4PCS
	Q x 2PCS
	P x 1PC

STEP 8

Noted that the red arrow is pointing towards the **headboard.**

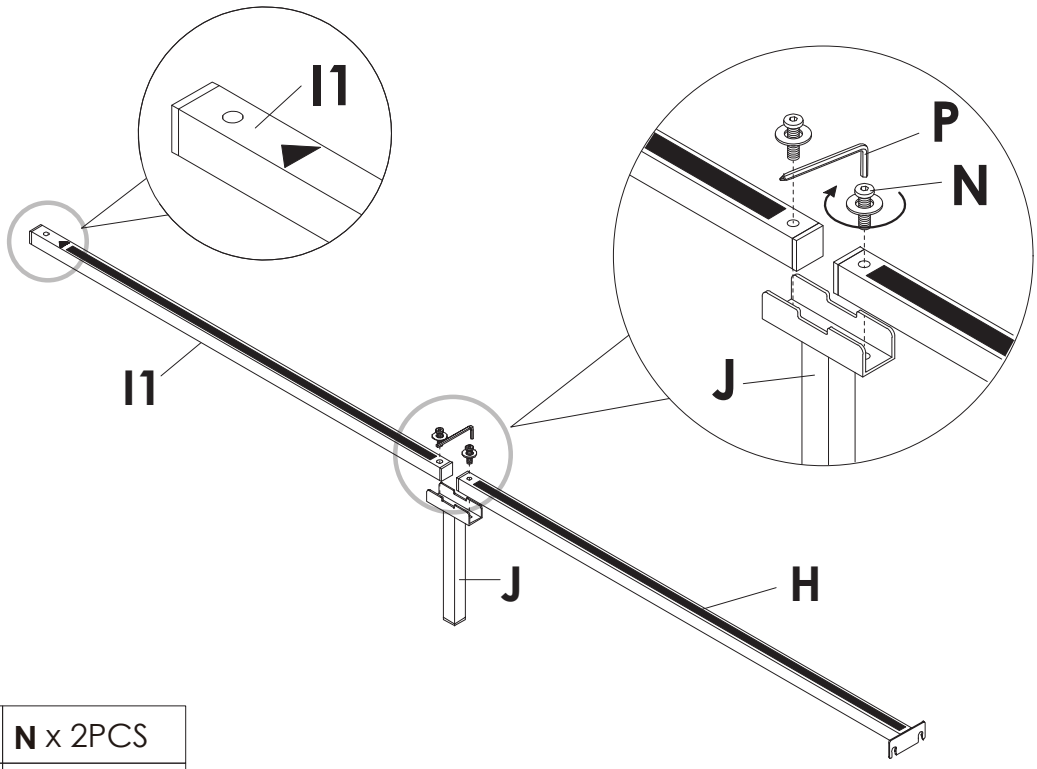

	N x 2PCS
	P x 1PC

Assembly Instruction of (Bed)

STEP 9

Loosen the screw in the middle of the footboard, hang the bracket, and tighten the innerscrew.

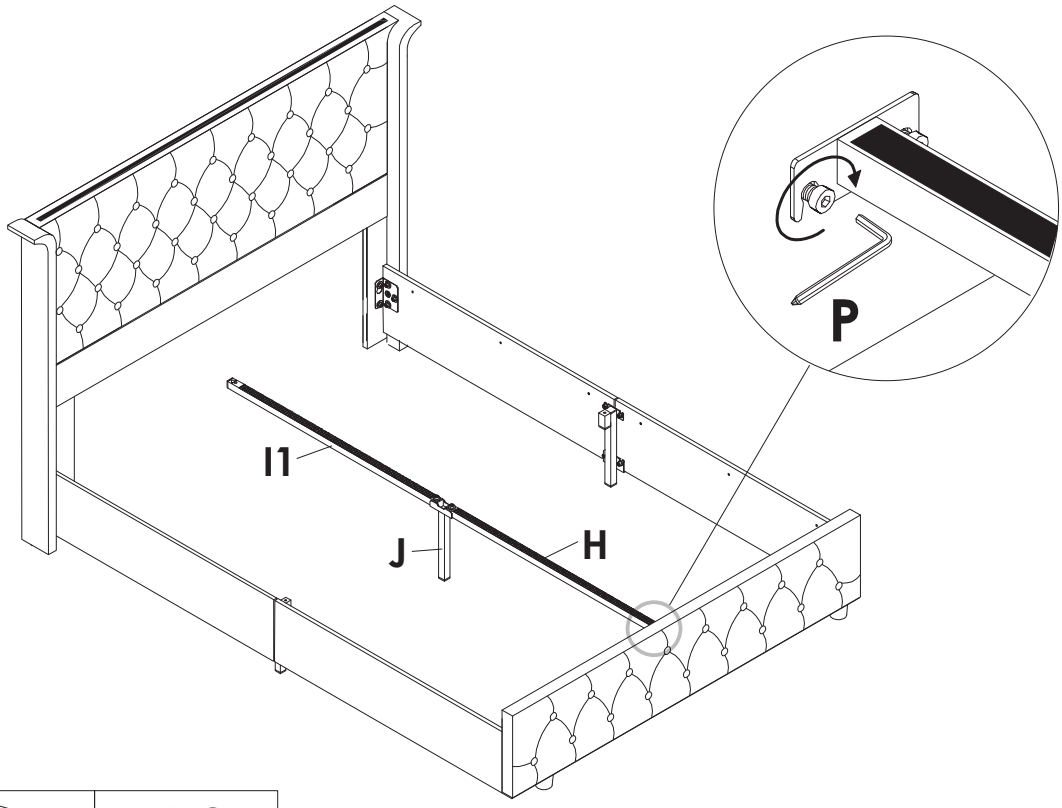

	P x 1PC

STEP 10

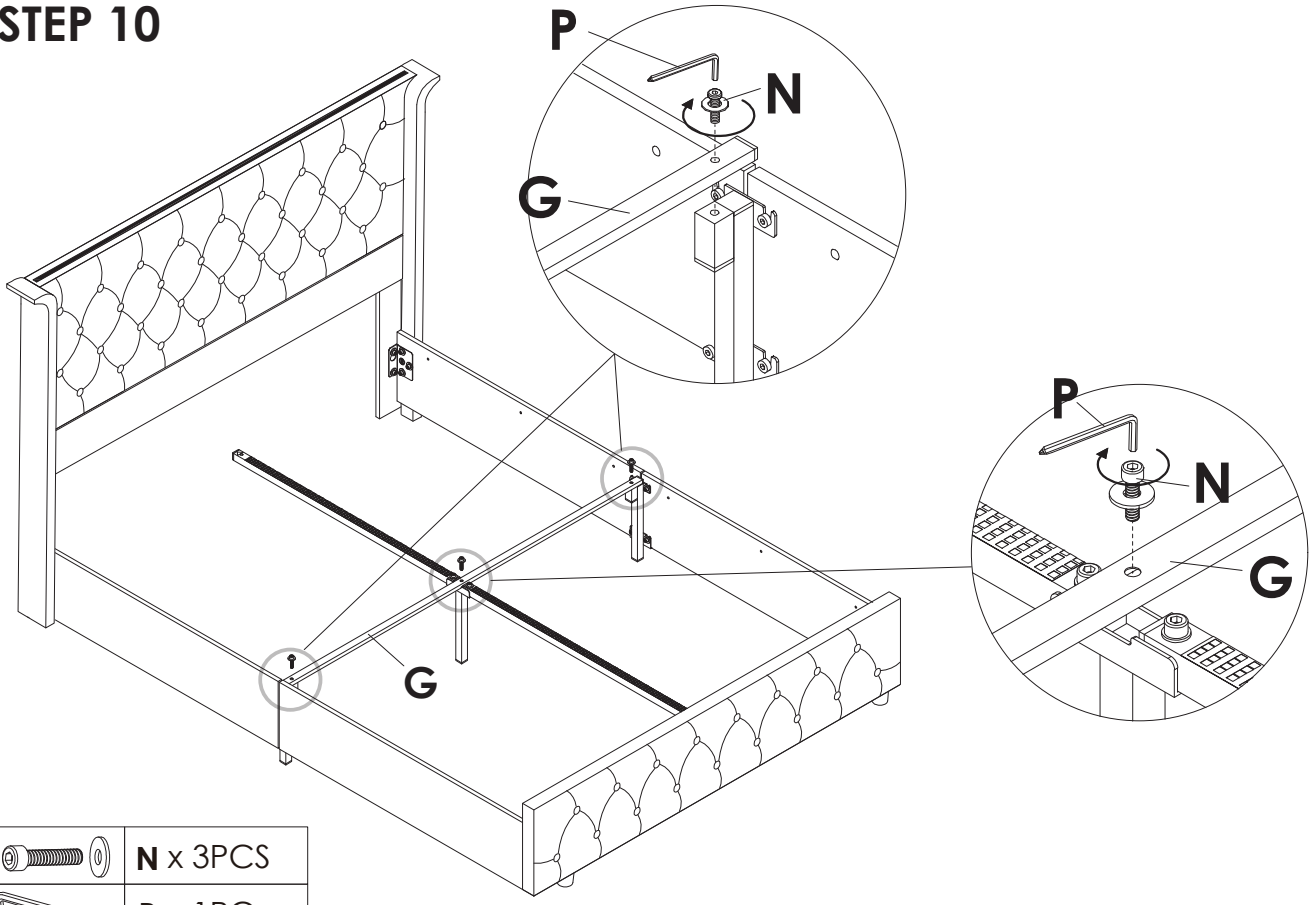

	N x 3PCS
	P x 1PC

Assembly Instruction of (Bed)

STEP 11

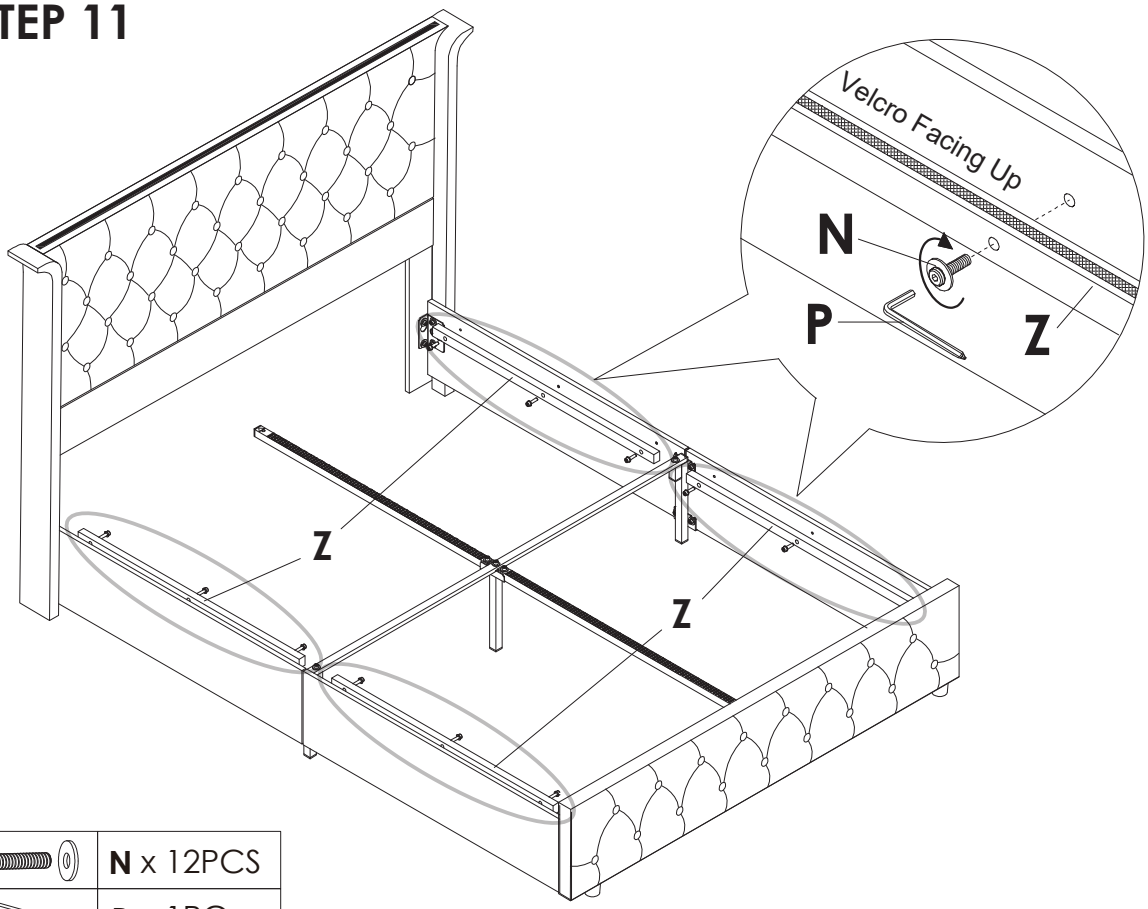

	N x 12PCS
	P x 1PC

STEP 12

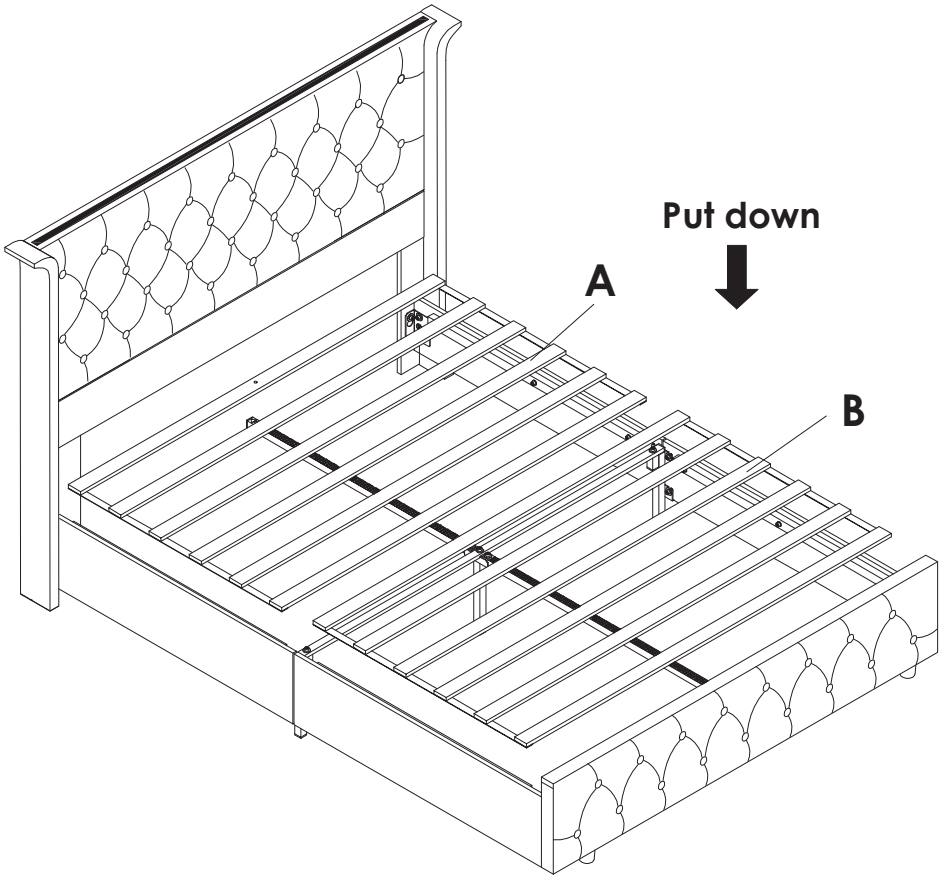

Assembly Instruction of (Bed)

STEP 13

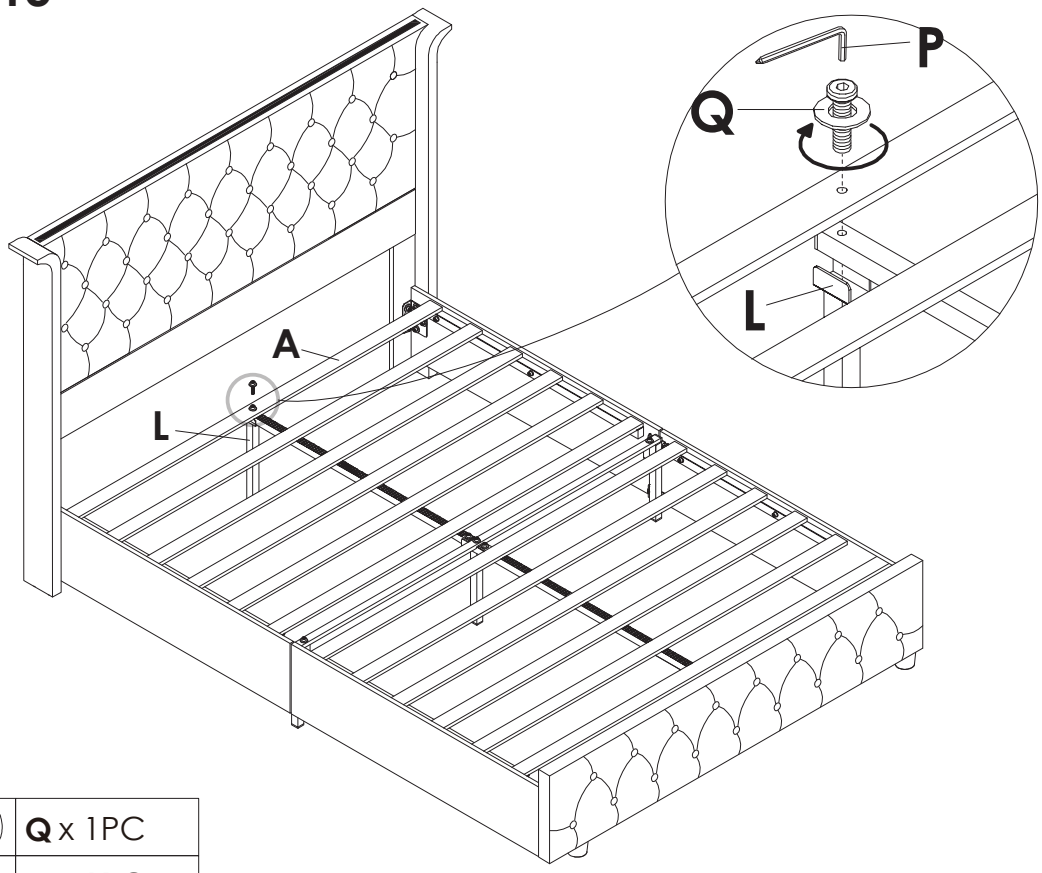

	Q x 1PC
	P x 1PC

STEP 14

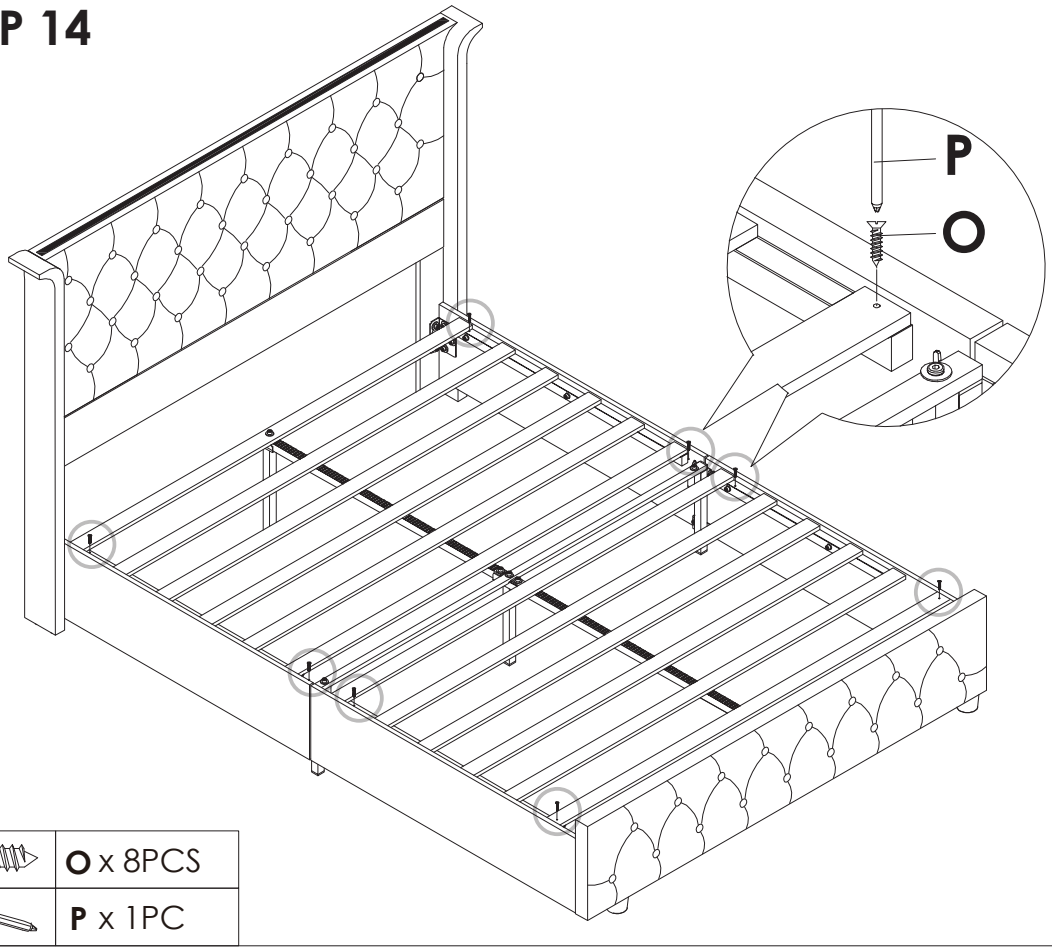

	O x 8PCS
	P x 1PC

Assembly Instruction of (Bed)

STEP 15

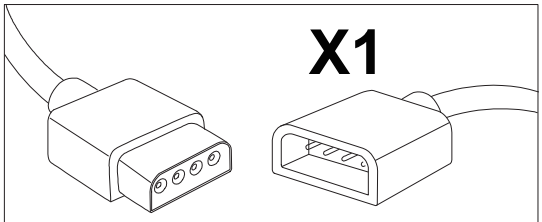

To prevent separation at the joint, the tape can be wrapped around the joint.

NOTE: The black part of the receiver (X1) needs to be exposed to air in order to better control the LED light.

⚠ WARNING

- ★ **Please use a 5V power plug for this LED Strip**
- ★ **Non-compliant voltage may cause device damage or safety hazards.**

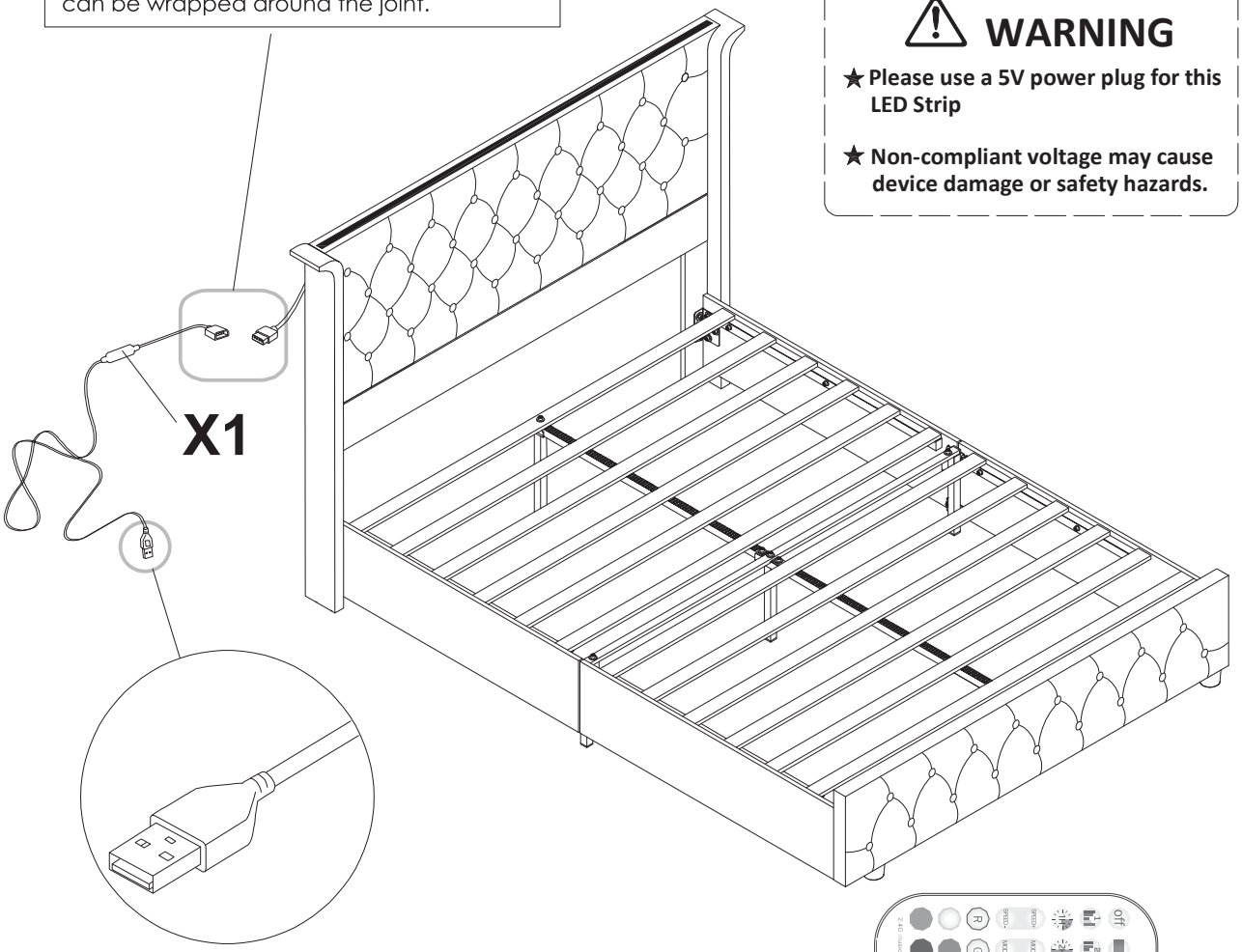

Remote control

You can use the remote to control the light. The LED lamp can only be used after the power supply is connected.

Step1: Please make sure your phone has Bluetooth enabled.
Step2: The LED light will automatically connect to the APP.

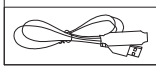

X1 x 1PC

⚠WARNING

INGESTION HAZARD: This product contains a button cell or coin battery.
DEATH or serious injury car occur if ingested.
A swallowed button cell or coin battery can cause **Internal Chemical Burns** in as little as **2 hours.**
KEEP new and used batteries **OUT OF REACH of CHILDREN**
Seek immediate medical attention if a battery is suspected to be swallowed or inserted inside any part of the body.

- Remove and immediately recycle or dispose of used batteries according to local regulations and keep away from children. Do NOT dispose of batteries in household trash or incinerate.
- Even used batteries may cause severe injury or death.
- Call a local poison control center for treatment information.
- This product contains a CR2025,DC3V coin battery. A coin battery can cause serious internal chemical burns if swallowed.
- Non-rechargeable batteries are not to be recharged.
- Do not force discharge, recharge, disassemble, heat above 132°F (60°C) or incinerate. Doing so may result in injury due to venting, leakage or explosion resulting in chemical burns.
- Ensure the batteries are installed correctly according to polarity (+ and -).
- Do not mix old and new batteries, different brands or types of batteries, such as alkaline, carbon-zinc, or rechargeable batteries.
- Remove and immediately recycle or dispose of batteries from equipment not used for an extended period of time according to local regulations.
- Always completely secure the battery compartment. If the battery compartment does not close securely, stop using the product, remove the batteries, and keep them away from children.

This device complies with Part 15 of the FCC Rules. Operation is subject to the following two conditions:

(1) This device may not cause harmful interference, and (2) this device must accept any interference received, including interference that may cause undesired operation.

Caution: changes or modifications not expressly approved by the party responsible for compliance could void the user's authority to operate the equipment.

NOTE: This equipment has been tested and found to comply with the limits for a Class B digital device, pursuant to Part 15 of the FCC Rules. These limits are designed to provide reasonable protection against harmful interference in a residential installation. This equipment generates, uses and can radiate radio frequency energy and, if not installed and used in accordance with the instructions, may cause harmful interference to radio communications. However, there is no guarantee that interference will not occur in a particular installation. If this equipment does cause harmful interference to radio or television reception, which can be determined by turning the equipment off and on, the user is encouraged to try to correct the interference by one or more of the following measures:

- Reorient or relocate the receiving antenna.
- Increase the separation between the equipment and receiver.
- Connect the equipment into an outlet on a circuit different from that to which the receiver is connected.
- Consult the dealer or an experienced radio/TV technician for help.

Thanks Gracias!

Made in China