Installation & Assembly

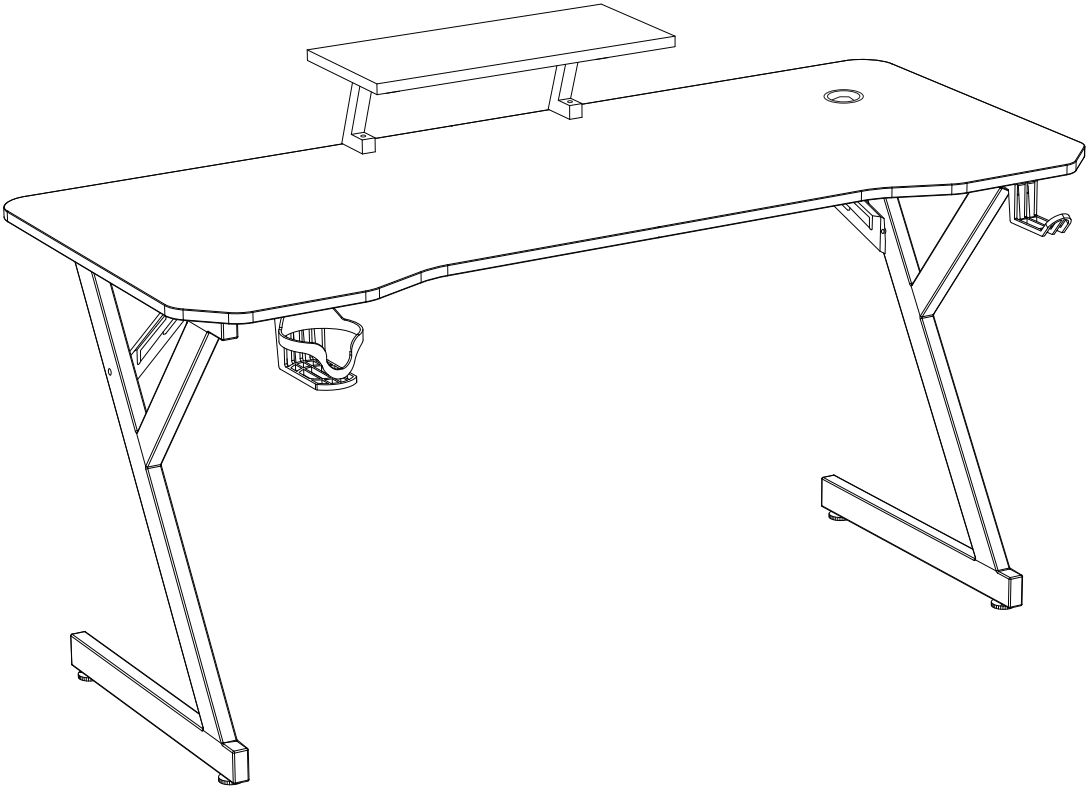

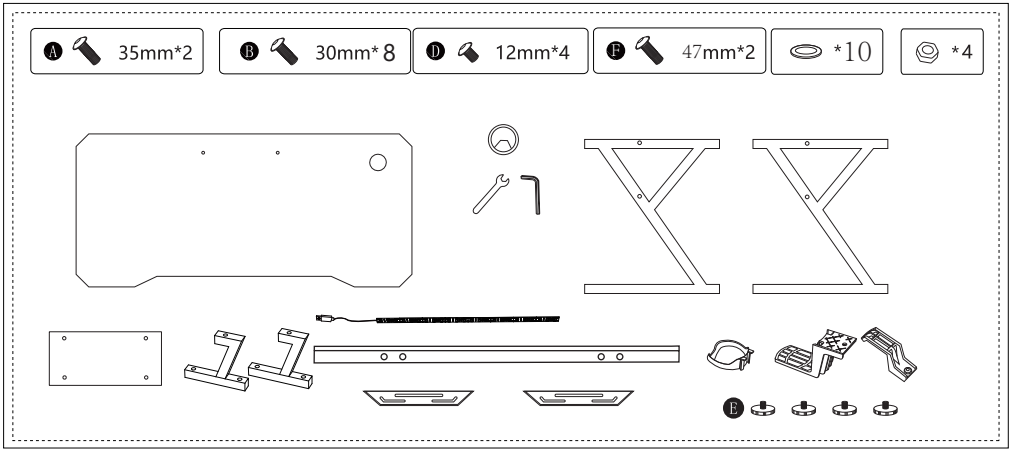

Ⓑ 30mm*2

*2

1

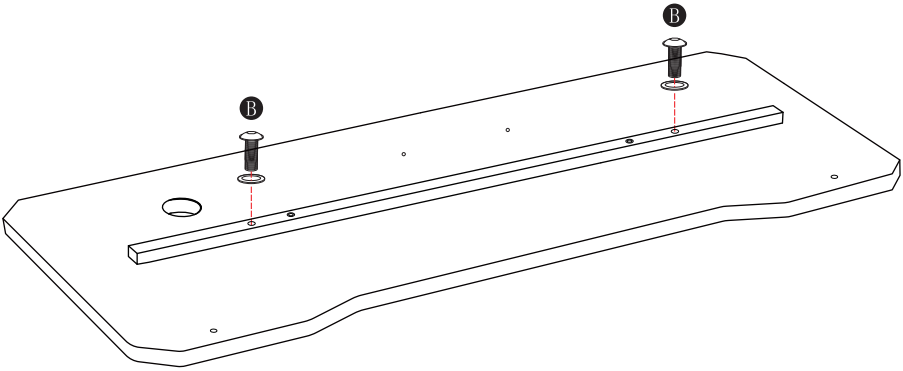

Ⓐ 35mm*2

2

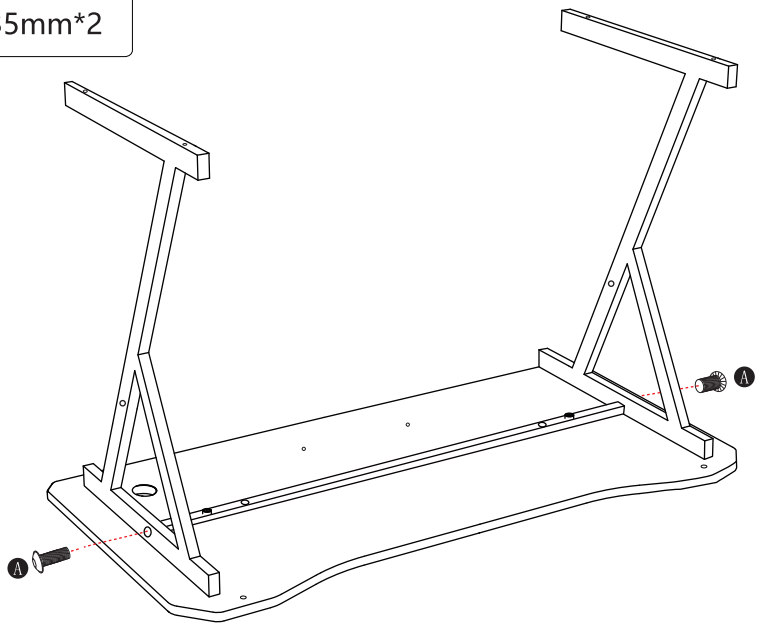

Ⓑ 30mm*2

Ⓓ 12mm*2

*2

3

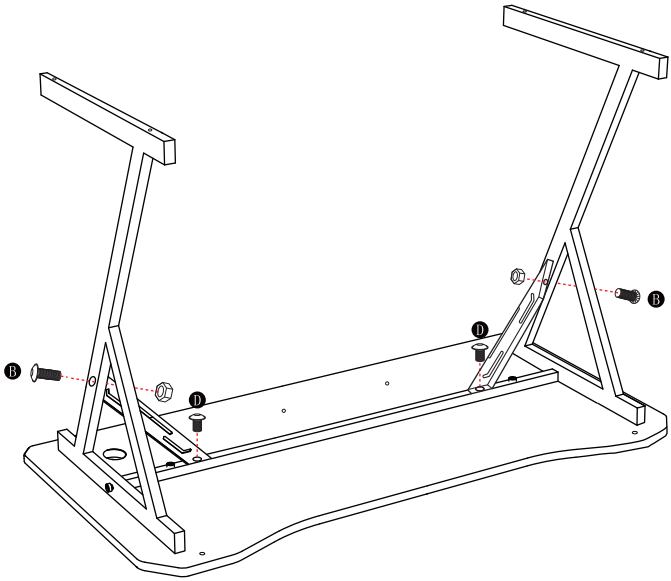

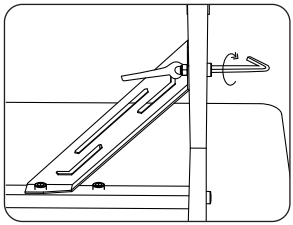

Ⓔ *4

Ⓓ 12mm*2

4

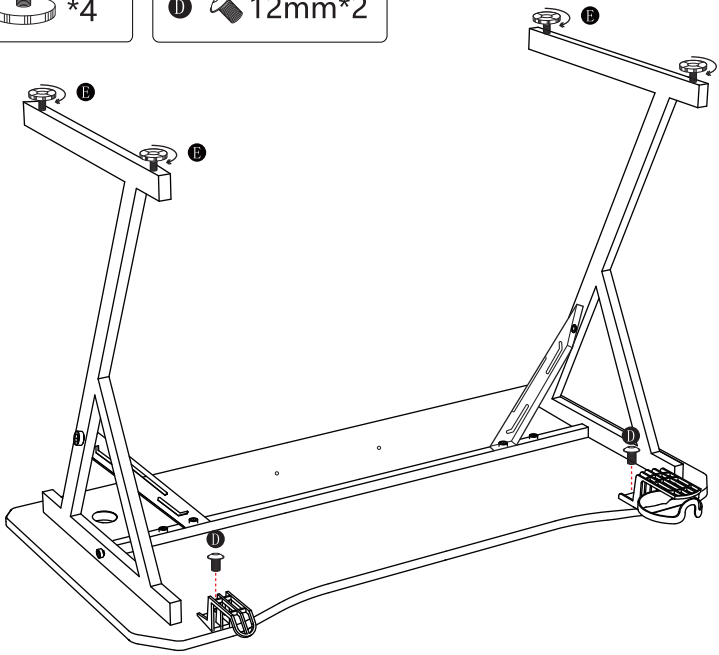

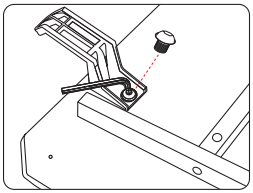

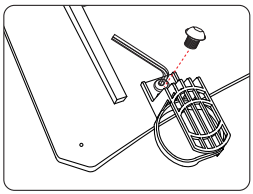

Ⓑ 30mm*4 | * 8 | Ⓕ 47mm*2

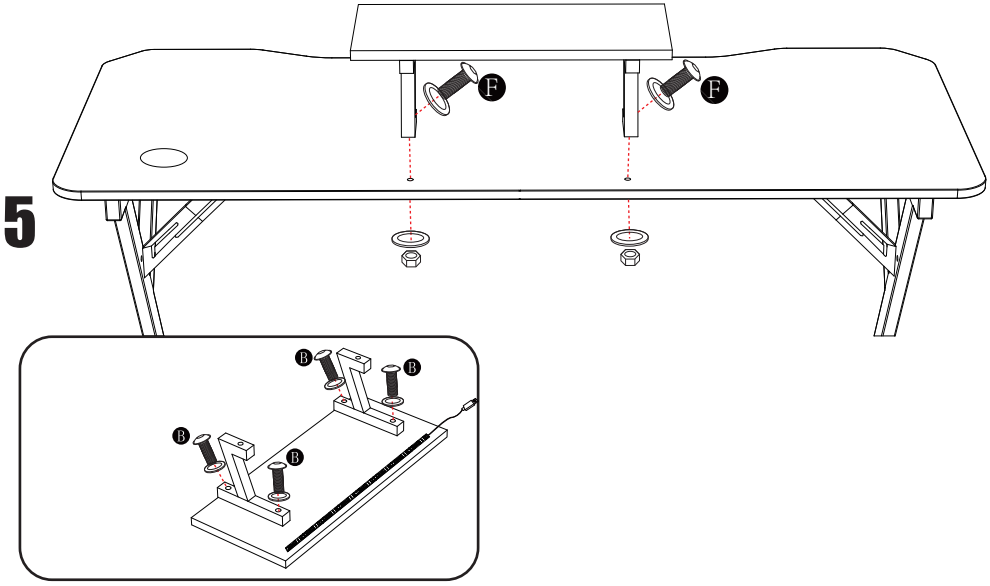

* 1

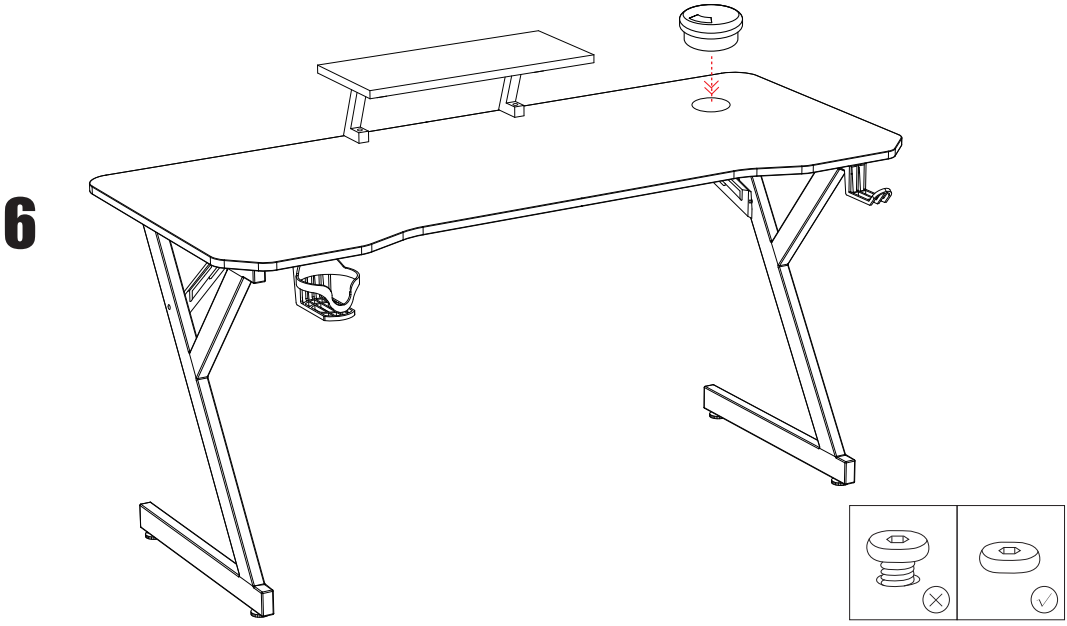

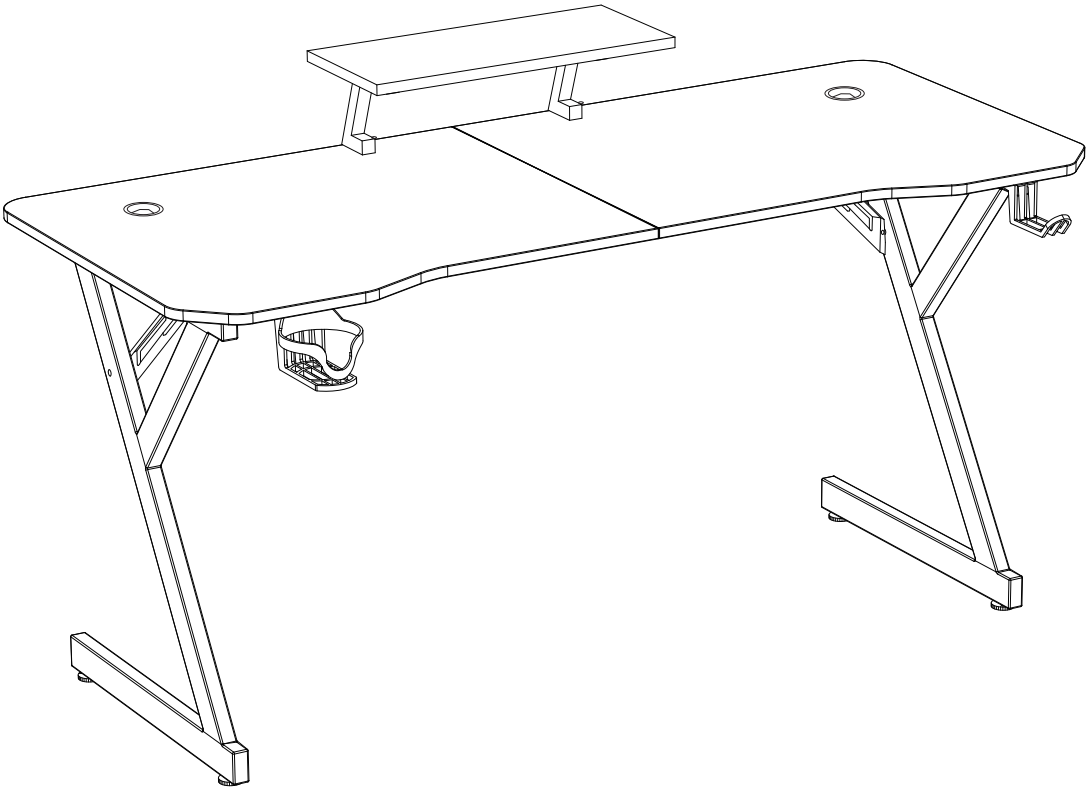

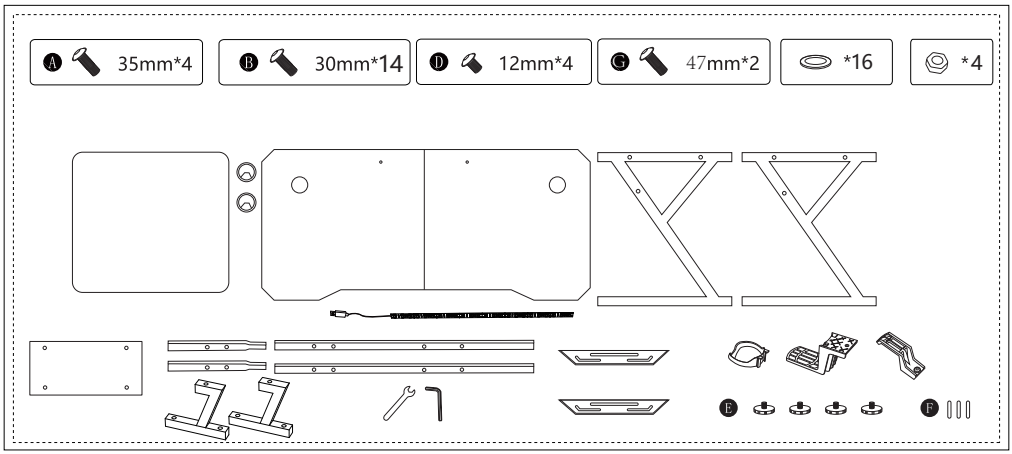
A 35mm*4
B 30mm*14
D 12mm*4
G 47mm*2
*16
*4
E
F

1

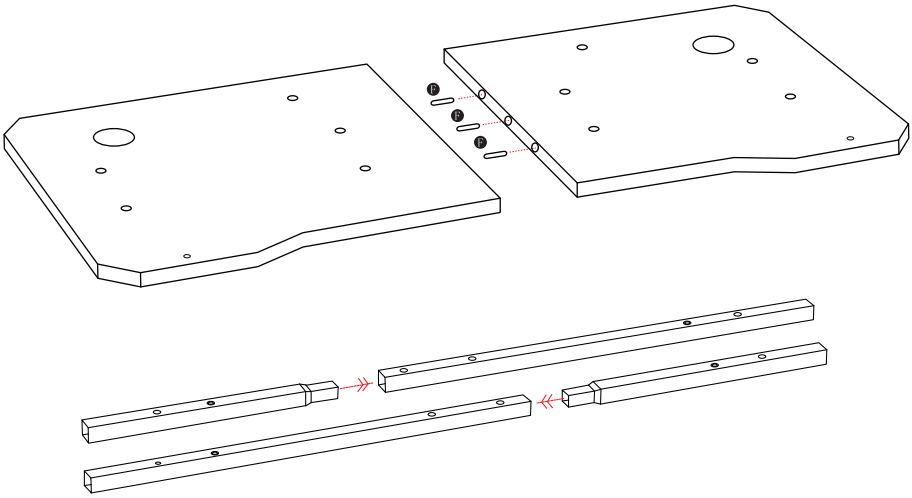

2

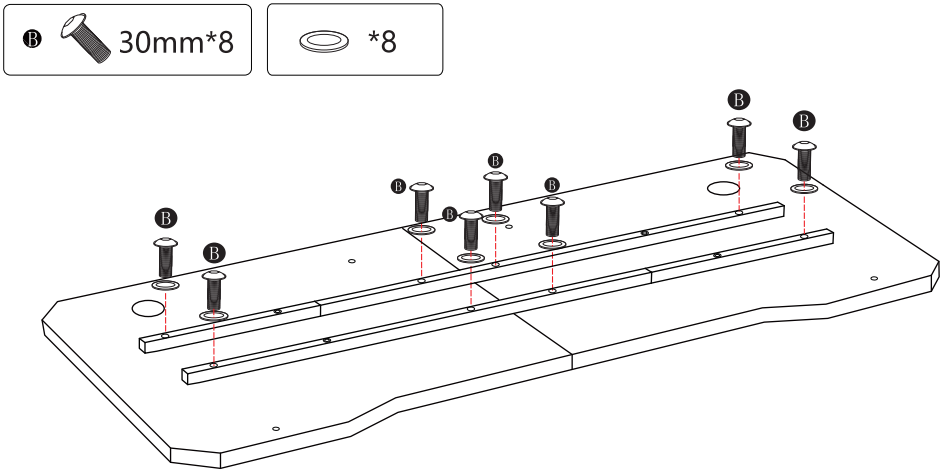

3

Ⓐ 35mm*4

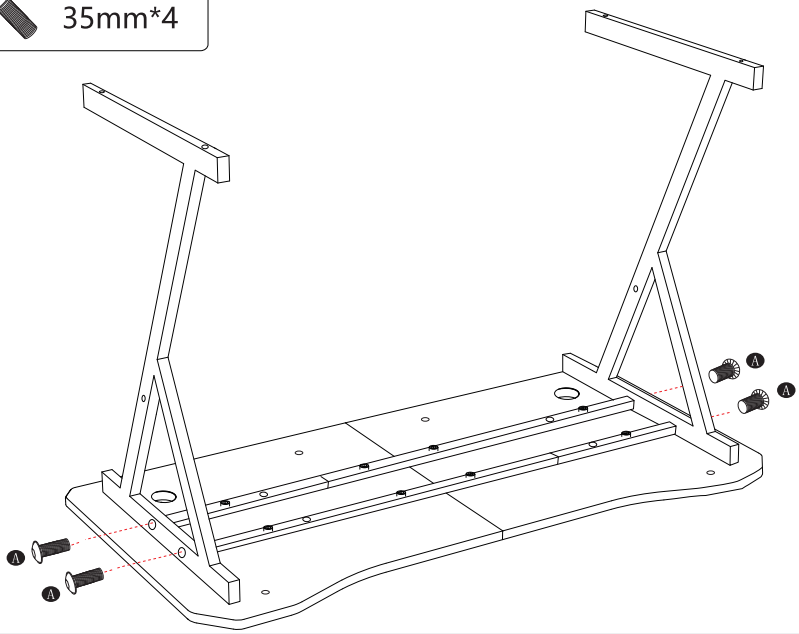

4

Ⓑ 30mm*2 Ⓓ 12mm* 4 *2 Ⓔ *4

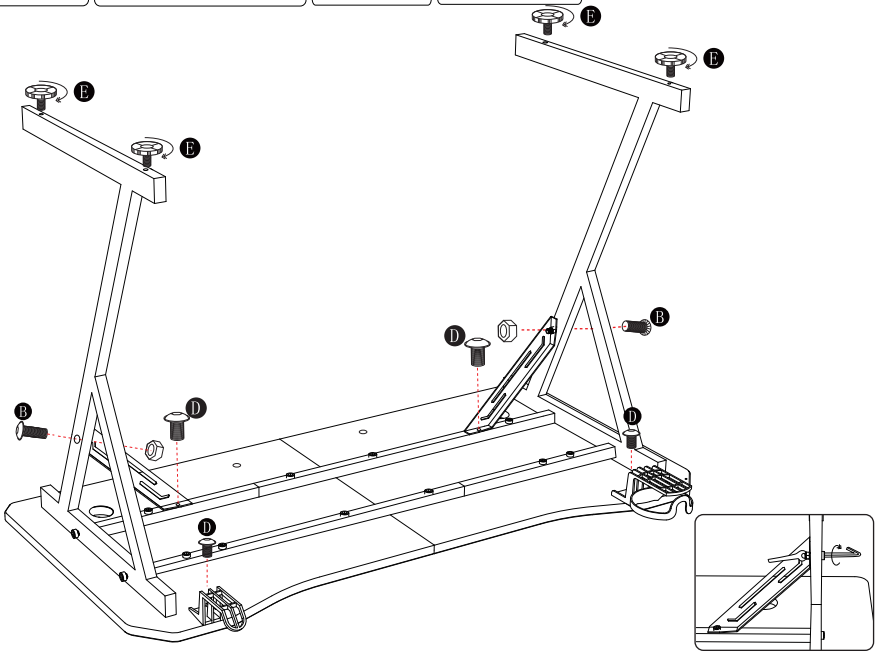

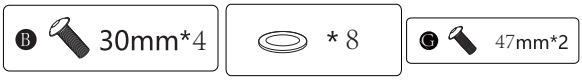

5

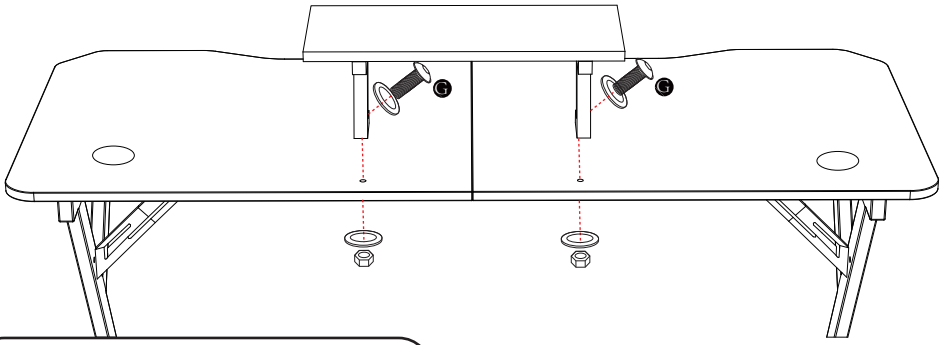

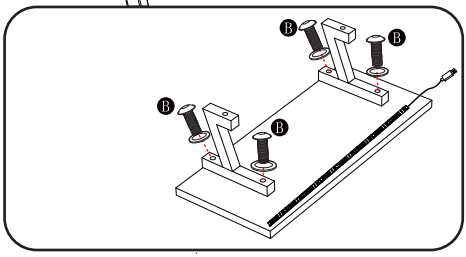



*2

6

