TWO HANDLE LAVATORY CENTERSET FAUCETS

2321900 #28 1.2GPM 4.5L/min

unit:inch (mm)

You may need

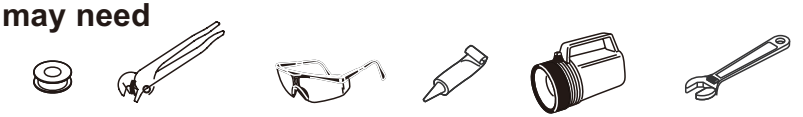

For easy installation of your faucet you will need:

To READ ALL the instructions completely before beginning.

To READ ALL warnings, care, and maintenanceinformation.

With 1.2 gpm are compliant with
California water effi ciency regulations,
Complies with California Proposition
65 and with the Federal Safe Drinking Water Act.

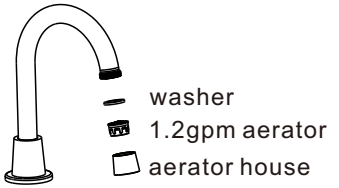

Cleaning and Care
Care should be given to the cleaning of this product. Although its finish is extremely durable,
It can be damaged by harsh abrasives or polish. To clean, simply wipe gently with a damp cloth and blot dry with a soft towel.

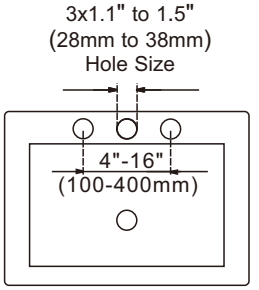

Pre drilled hole size :
1.26" to 1.5"(32mm to 38mm)
Hole Size

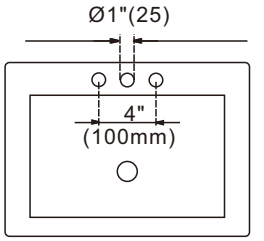

Unsuitable sink size:
1"(25mm)
Hole Size

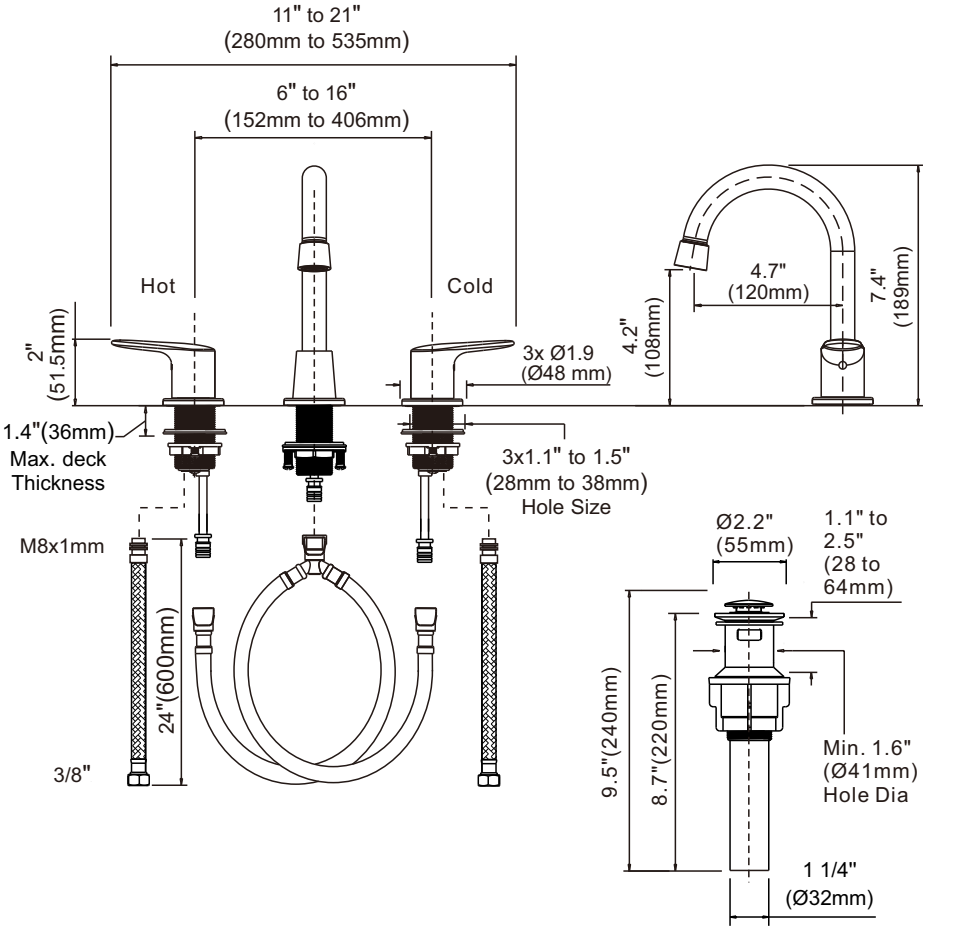

OPERATION

- Double levers style handles
- Maximum handle(s) rotation angle is 90˚ to full on
- Rotate hot side counter clockwise to open (clockwise to close)
- Rotate cold side clockwise to open (counter clockwise to close)

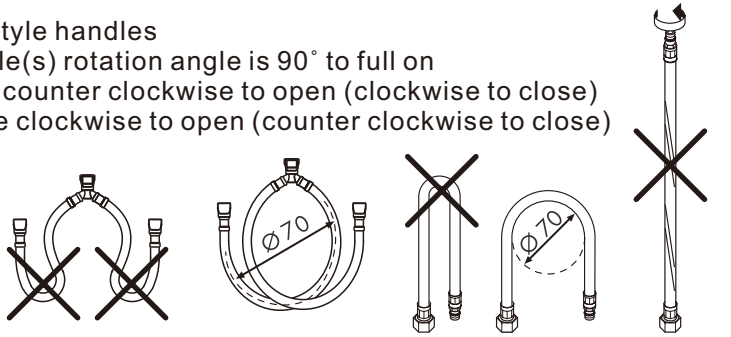

Notes

Before installing the valves, clean the water pipe thoroughly to avoid dirt and deposits.

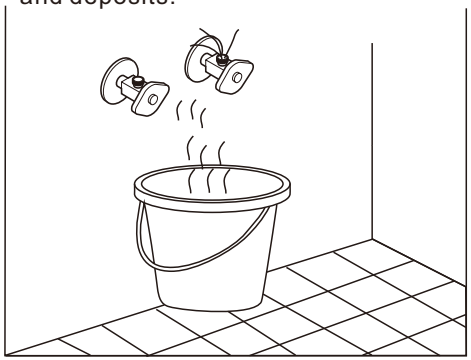

1

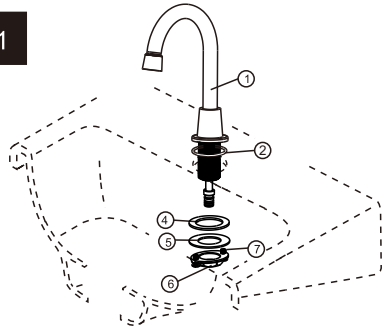

1.Make sure attach the O-ring (2) to spout (1) .
3.Place washer(4) and metal plate(5) over mountingstud under sink. Securewith mounting nut(6).
4.Lock mounting nut(6) into position by tightening screw (7).

2

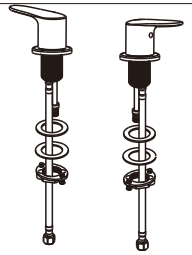

Remove the brass lock nut from the thread rod counter-clockwise, remove the washer and washer.

3

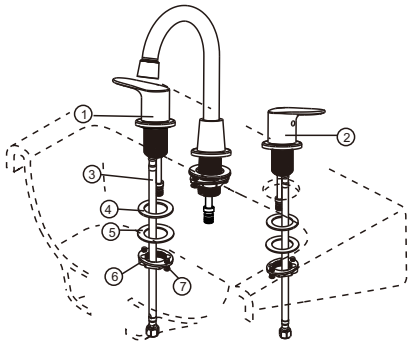

1.Make sure attach the gasket to the base of hot (1) and cold (2) end valves.
2.Slide hot (1) and cold (2) end valves with flexible hoses (3) through sink.
3.Place washer(4) and metal plate(5) over mountingstud under sink. Secure with mounting nut(6).
4.Lock mounting nut(6) into position by tightening
screw (7).

4

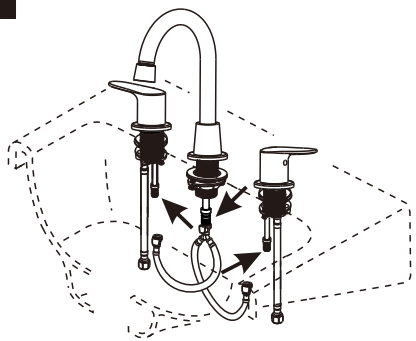

NOT WITH apply teflon tape to the quick connect installation.

Align tabs and tabs on quick connects .
Push quick connects firmly upward and snap onto receiving tube tab .
Pull down moderately to ensure each connection has been made.

5

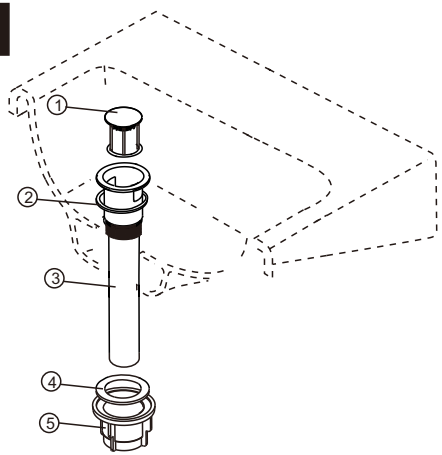

1.Remove the washer (2) , black gasket (4) and nut (5) from the assembly.
2.Slide washer (2) up to underside of flange (3).
Insert flange (3) and washer (2) into sink and secure with the black gasket (4) washer and nut (5) from underneath the sink.
3.Put down and check the Springloaded stopper (1).
4. Connect assembly to drain.

6

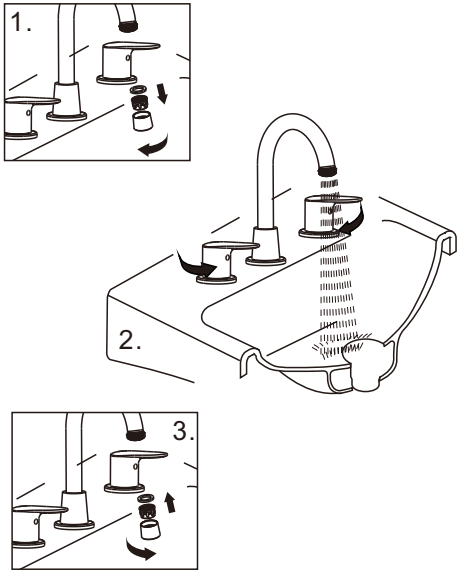

To flush debris from the plumbing system:
1. Remove the aerator by hand.
2. Run hot and cold water for one minute.
3. Replace the aerator.

7

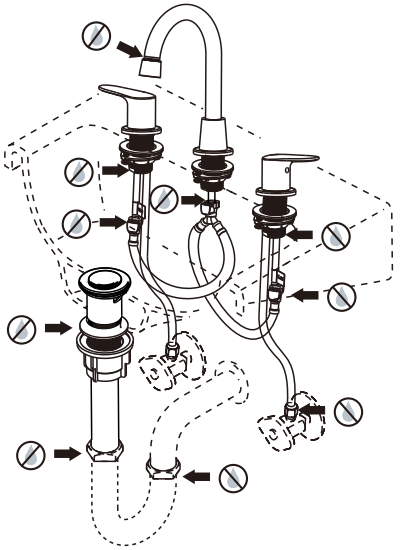

Repeat for other hose connection making sure the hose with the hot label is connected to the hot supply valve and the other
hose is connected to the cold supply valve.
FLUSH SYSTEM/CHECK FOR LEAKS.
Turn on hot and cold water supplies and flush water lines for one minute.
Check all connections at arrows for leaks.
Retighten if necessary, but do not overtighten.