Preferred Bath Accessories LLC
1031 E Mountain St. Kernersville, NC 27284
PH: 888-315-8816 FAX: 866-496-8122
www.preferredbathaccessories.com

PC1000GM Polished Chrome
Glass Mount Single Robe Hook
TECHNICALDATA

GLASS MOUNT ROBE HOOK

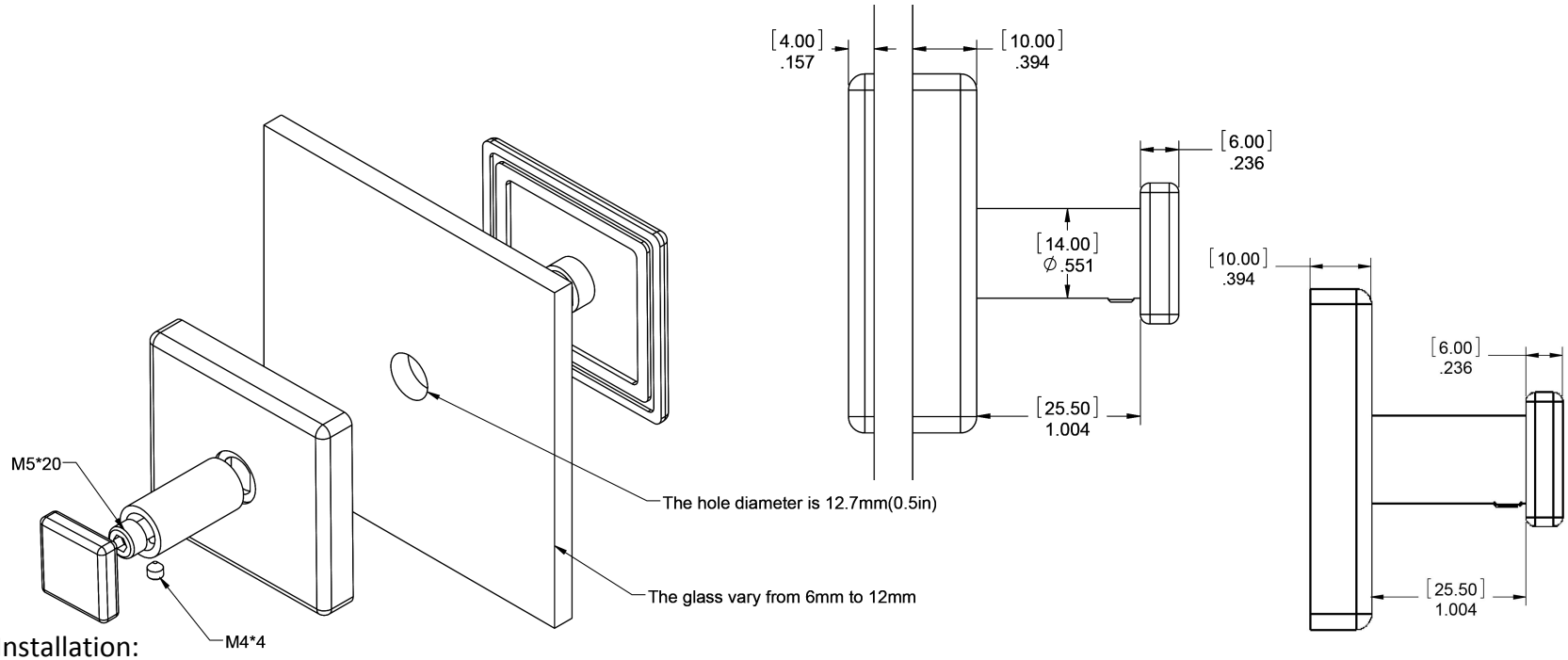

Installation:

Insert front and back through a ½" hole in glass. Attach flange and post over bracket tighten M5*20 screw firmly, attach cap and tighten with M4*4 set screw **(Do not over tighten)**.

Materials:

- Zinc Die Cast
- 1 - M5*20 screw
- 1 - M4*4 set screw

Limited Warranty

Preferred Bath Accessories LLC. warrants to the purchaser that the product will be free from defects in material and workmanship. If the product does not comply with this warranty, Preferred Bath Accessories LLC. will repair or replace the product or, at Preferred Bath Accessories LLC.'S option, refund the purchase price. The limited warranty period is for the lifetime of the product. Limitations on the Warranty: The warranty does not cover, normal wear and tear, product abuse, neglect, improper installation or maintenance. Purchaser Requirements: If this product does not meet Preferred Bath Accessories LLC.'s warranty, return the product (postage prepaid) to the place of purchase with proof of purchase and a written claim briefly describing the defect. You may be required to provide other information or evidence of the defect.