42-inch Vanity
(Back View)

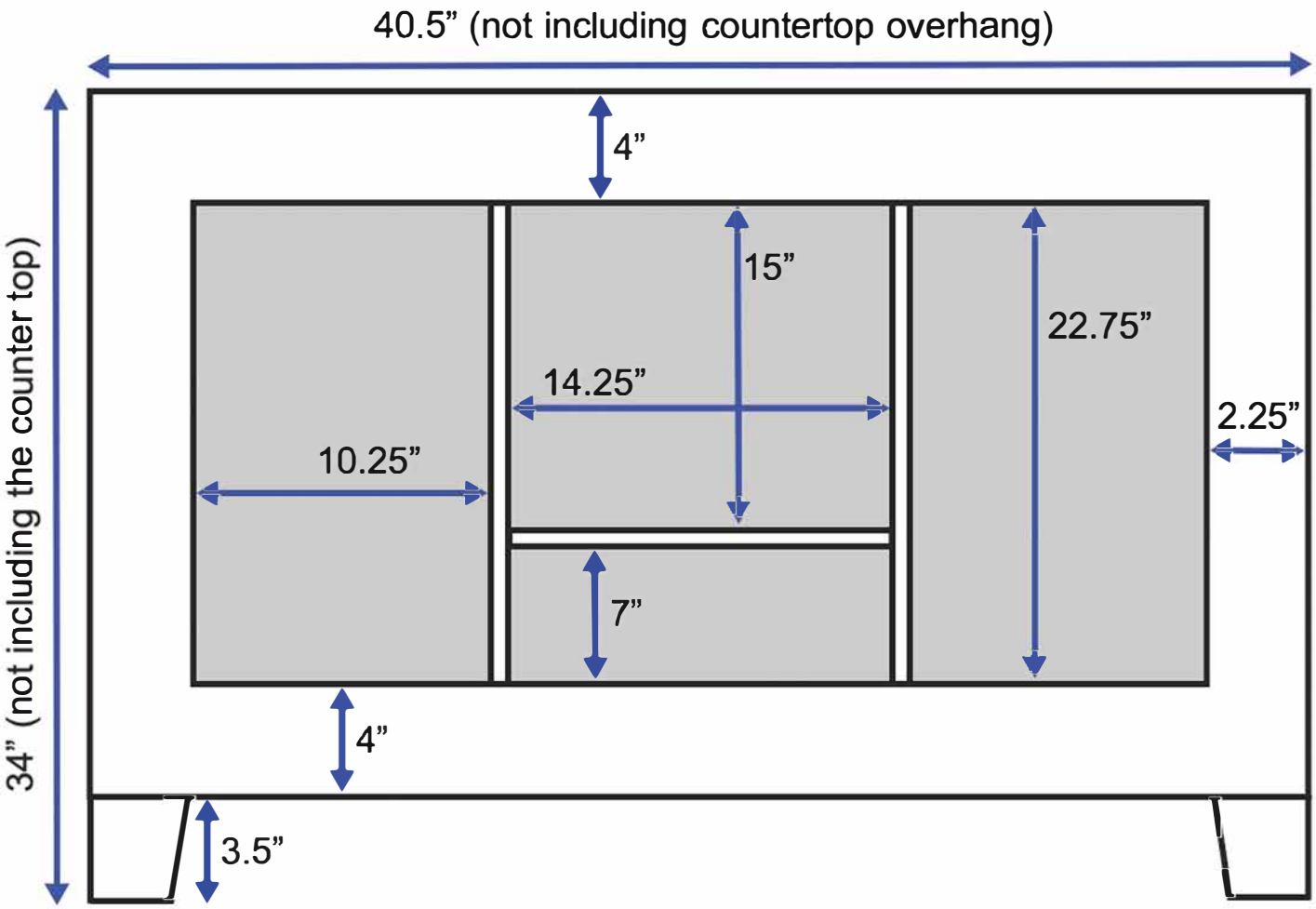

All measurements are approximate and rounded to the nearest quarter inch.
Please allow for a slight margin of error.