ASSEMBLY INSTRUCTION

Bench

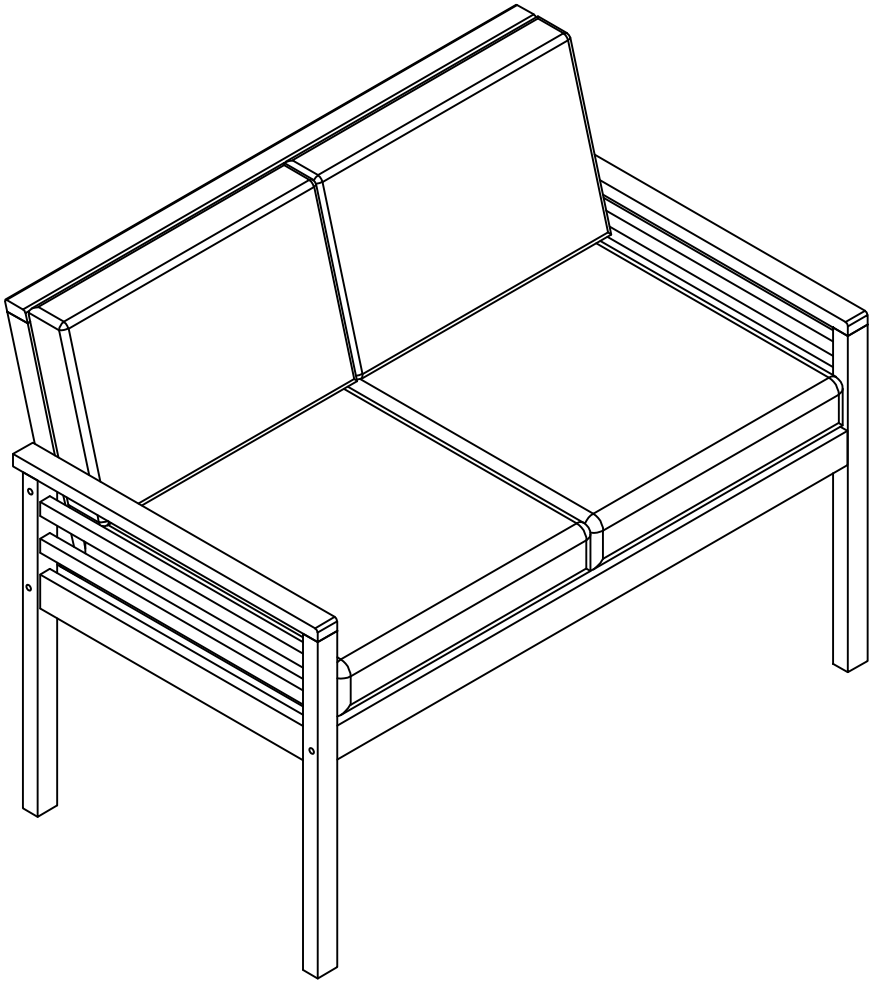

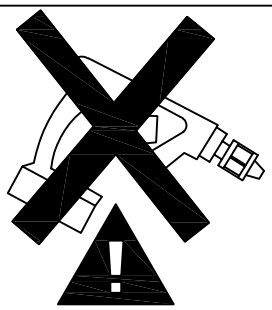

. Use of power tool to assemble this product will invalidate any claim and damage this product making it unsafe !!!
. Please assemble on a clean soft surface to avoid damage.

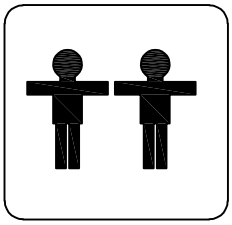

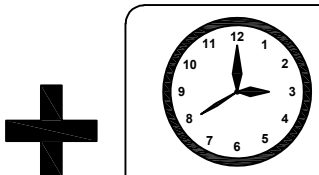

30 minutes

Tools Required

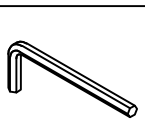

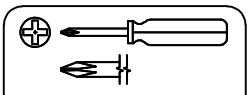

(Not included)

Part list - Bench

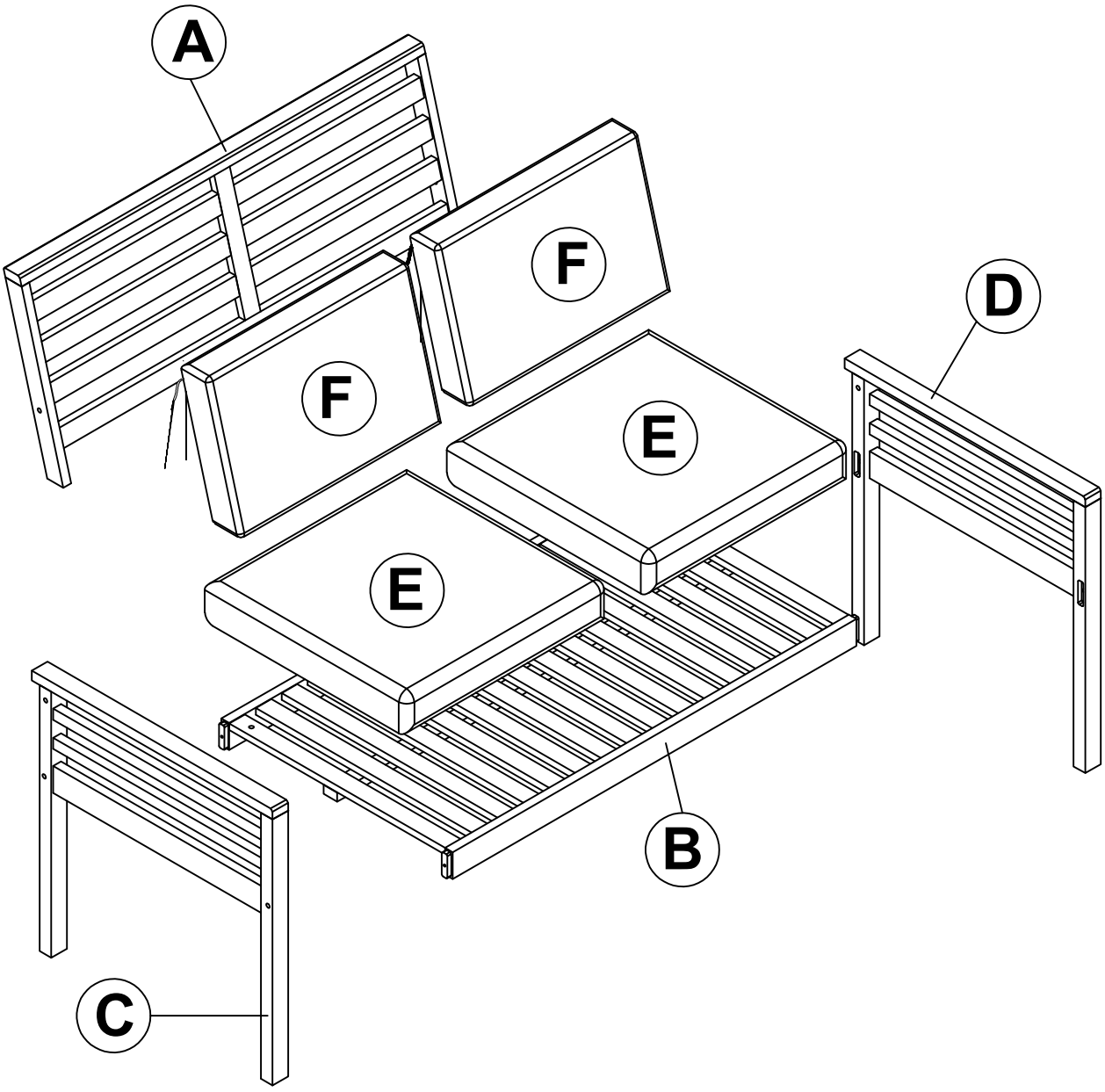

Identifying the hardware-Identify the hardware using the illustrations below

① M7*90mm Bolt 04

② M7*60mm Bolt 02

③ M8*55mm Bolt 02

④ 02

⑤ 02

Step 01

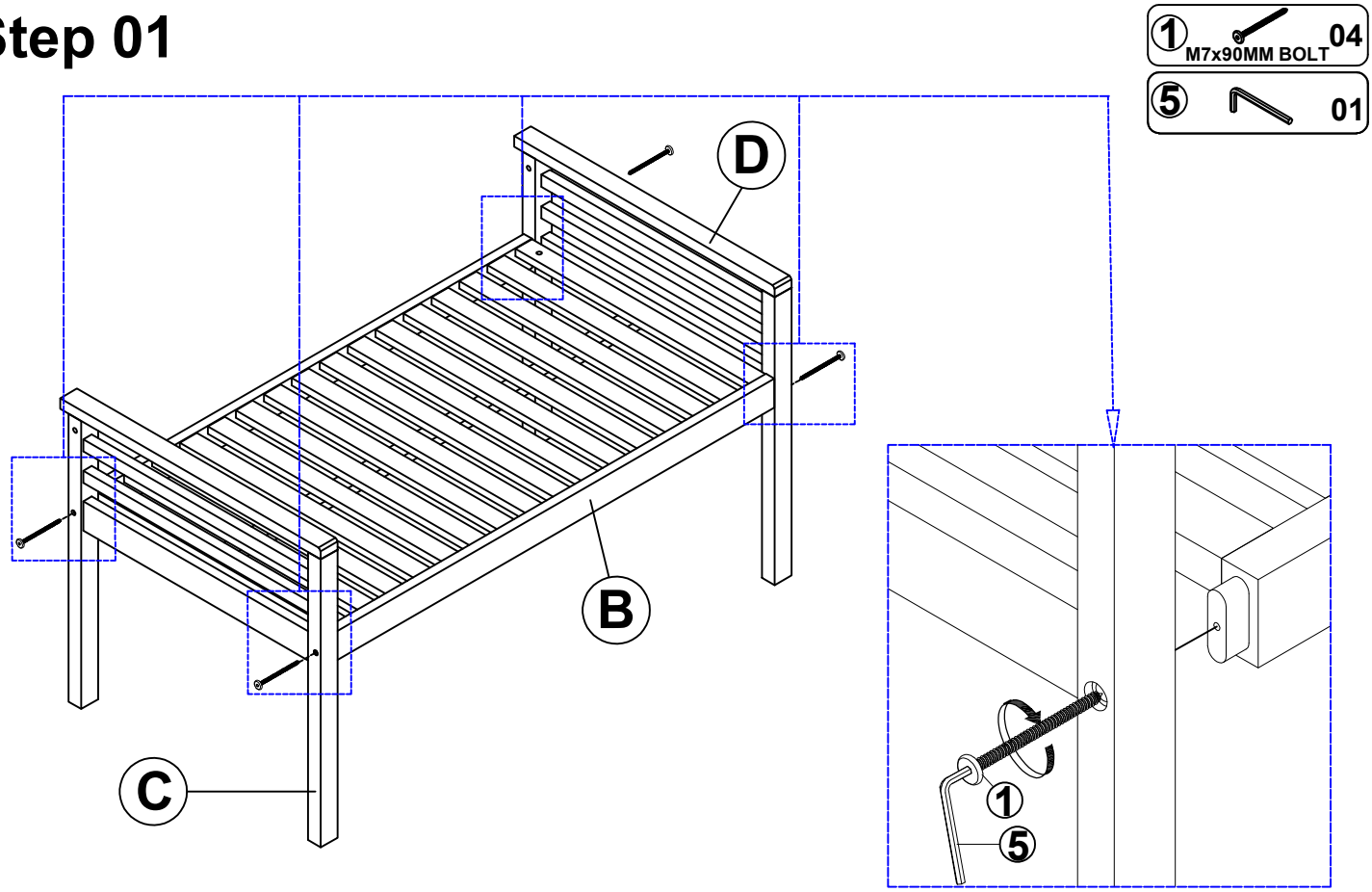

Step 02

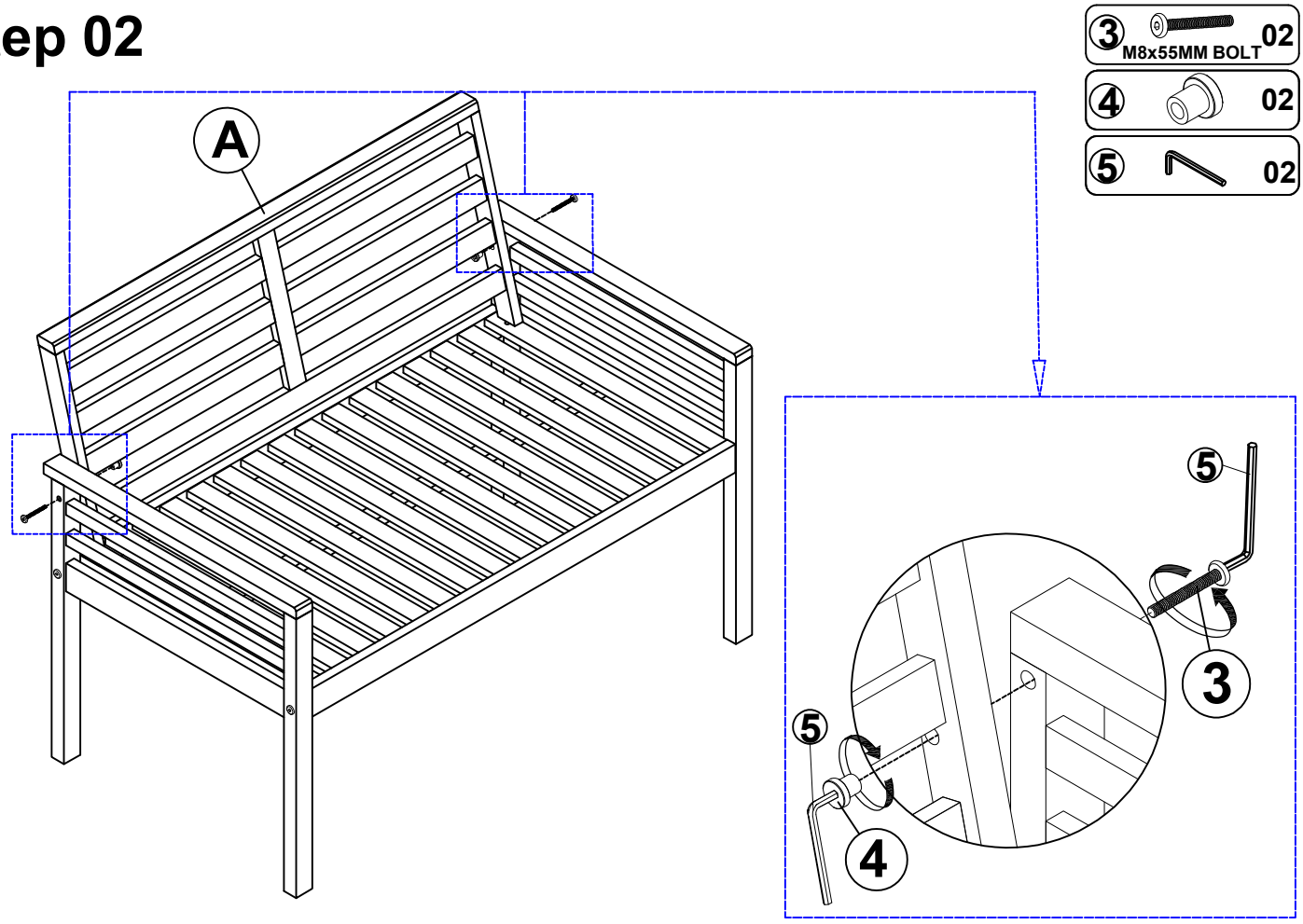

Step 03

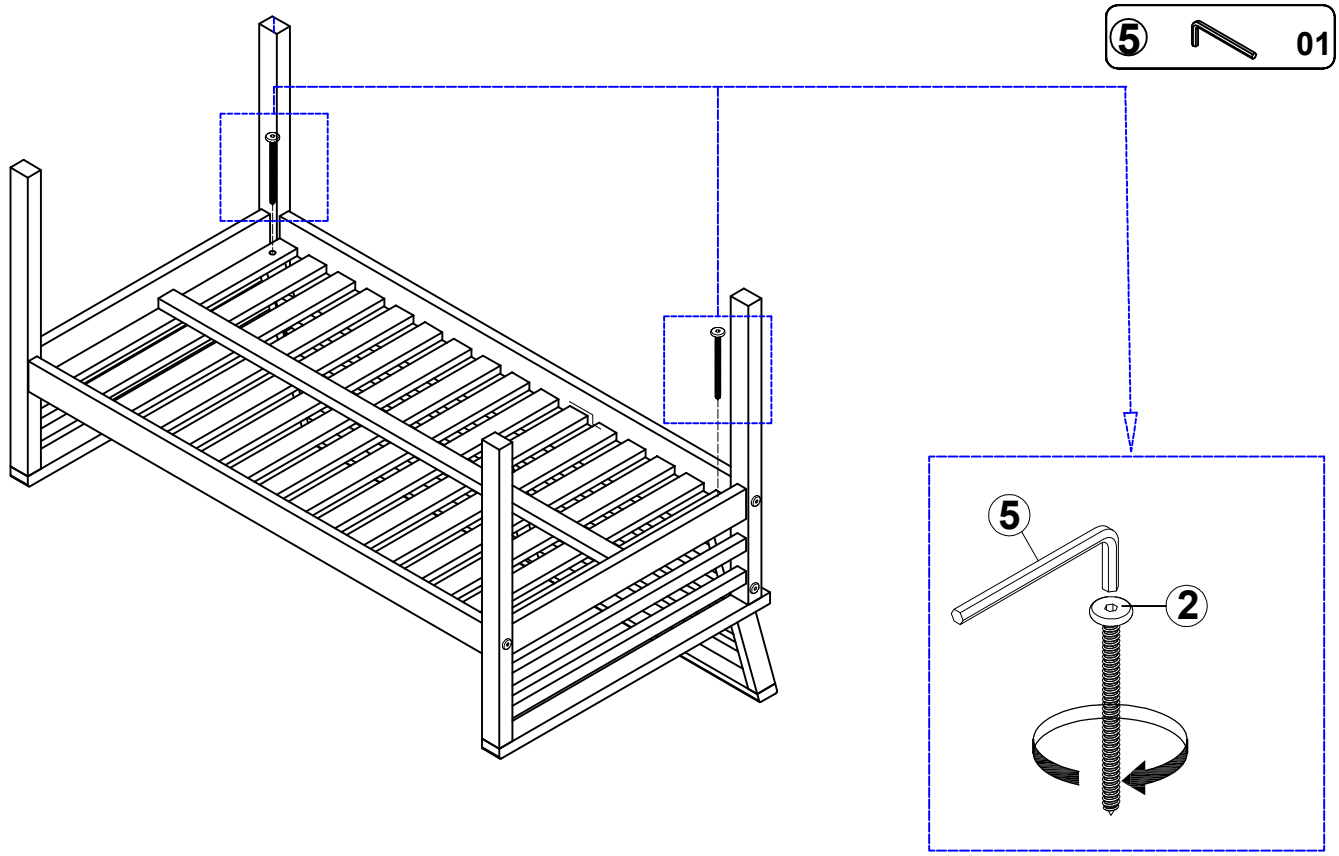

Step 04

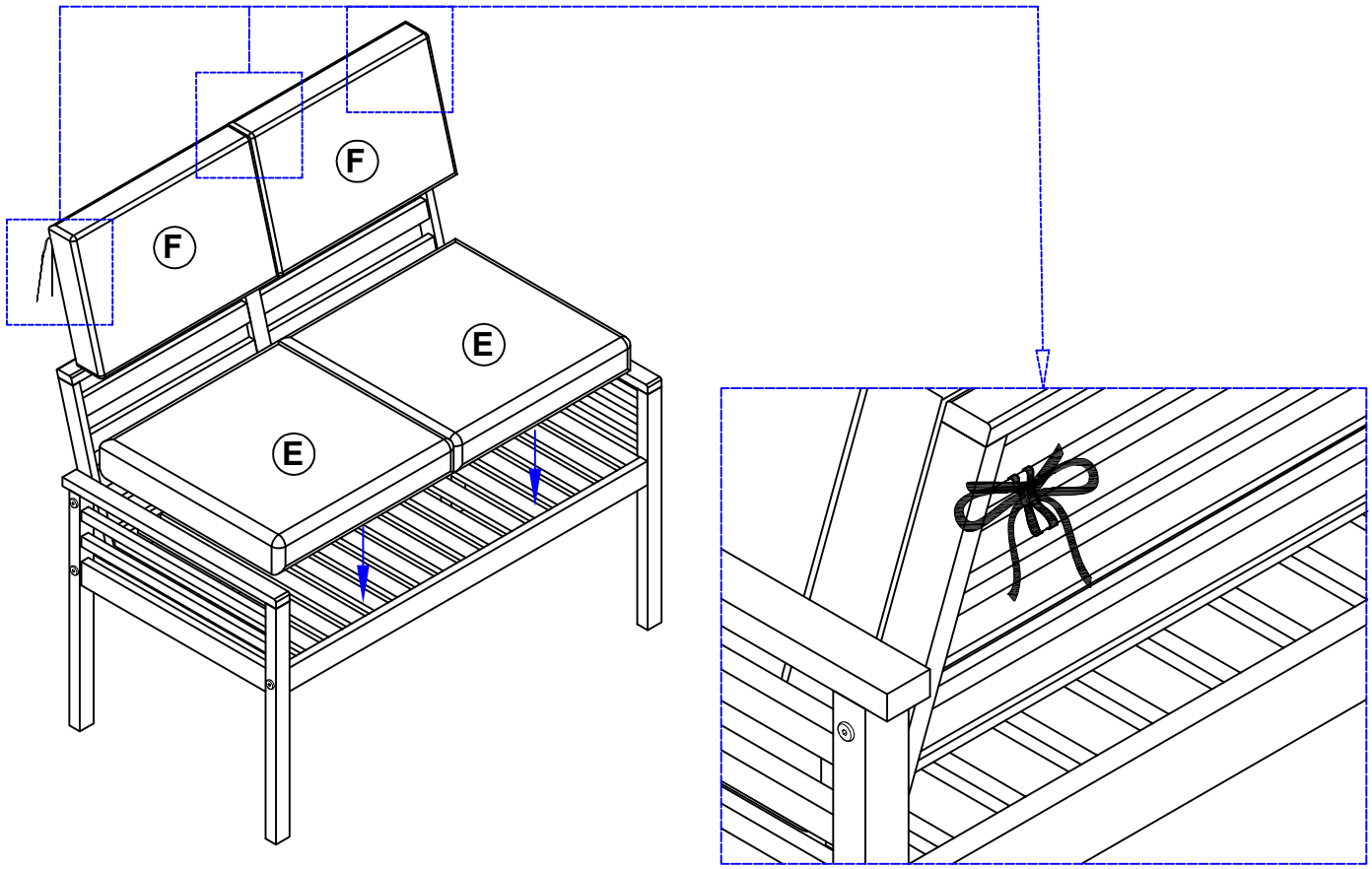

Care & Maintenance

While weathering and color variation over time is natural for outdoor wood furniture, we recommend the following care and maintenance for best results:

.Store wood furniture indoors out of season. Make sure furniture is completely dry before storage.

. Cover wood furniture with outdoor covers when left outside during inclement weather or when not in use.

. Wipe spills with a clean dry cloth.

. Avoid the use of harsh cleaners and abrasives. Do not power wash.

. Use Teak Oil to protect from sun and weather exposure. This will require light sanding. Use a natural bristle brush or lint free cloth to apply the oil. Usually, oil should be reapplied every two to three months. Before each application, clean thoroughly and make sure your furniture is completely dry.

. Inspect your furniture every three to six months. Tighten any loose fittings or bolts as required.

IMPORTANT! RETAIN THESE INSTRUCTIONS FOR FUTURE REFERENCE

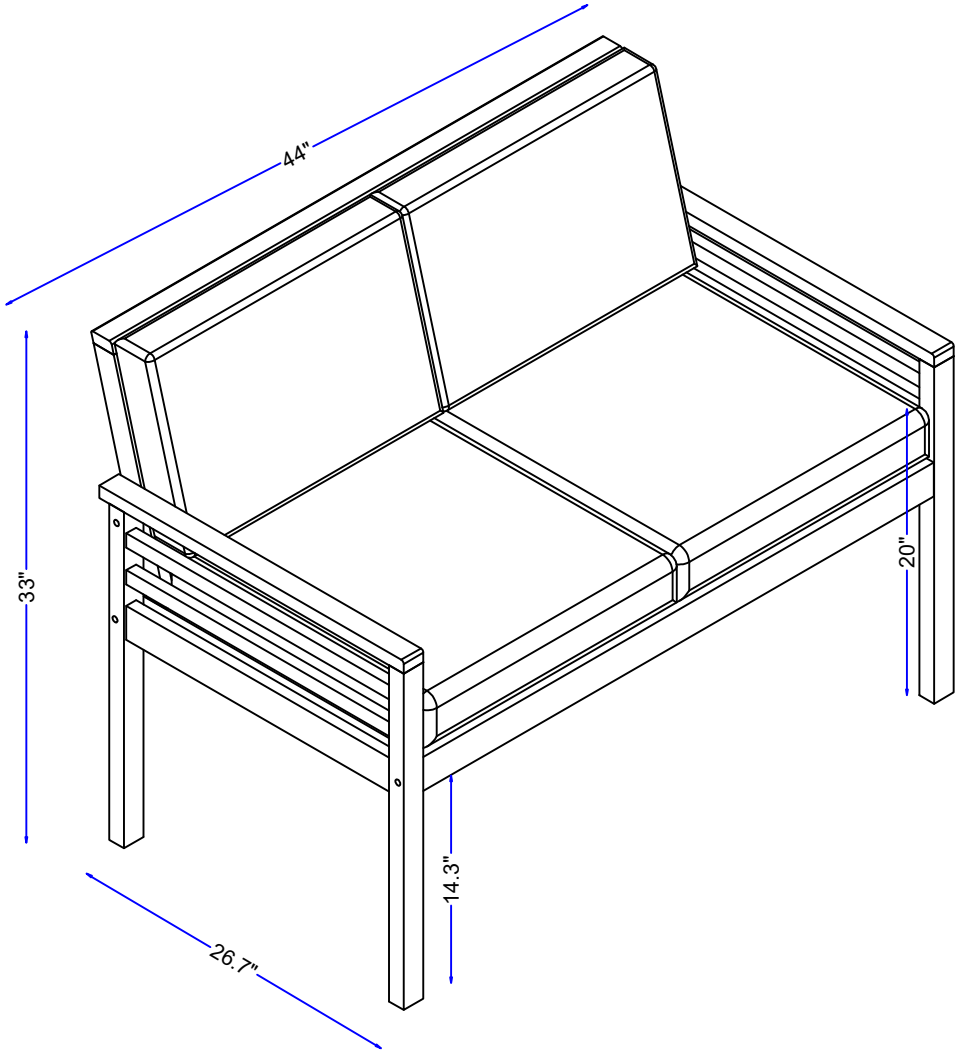
44"
33"
20"
14.3"
26.7"

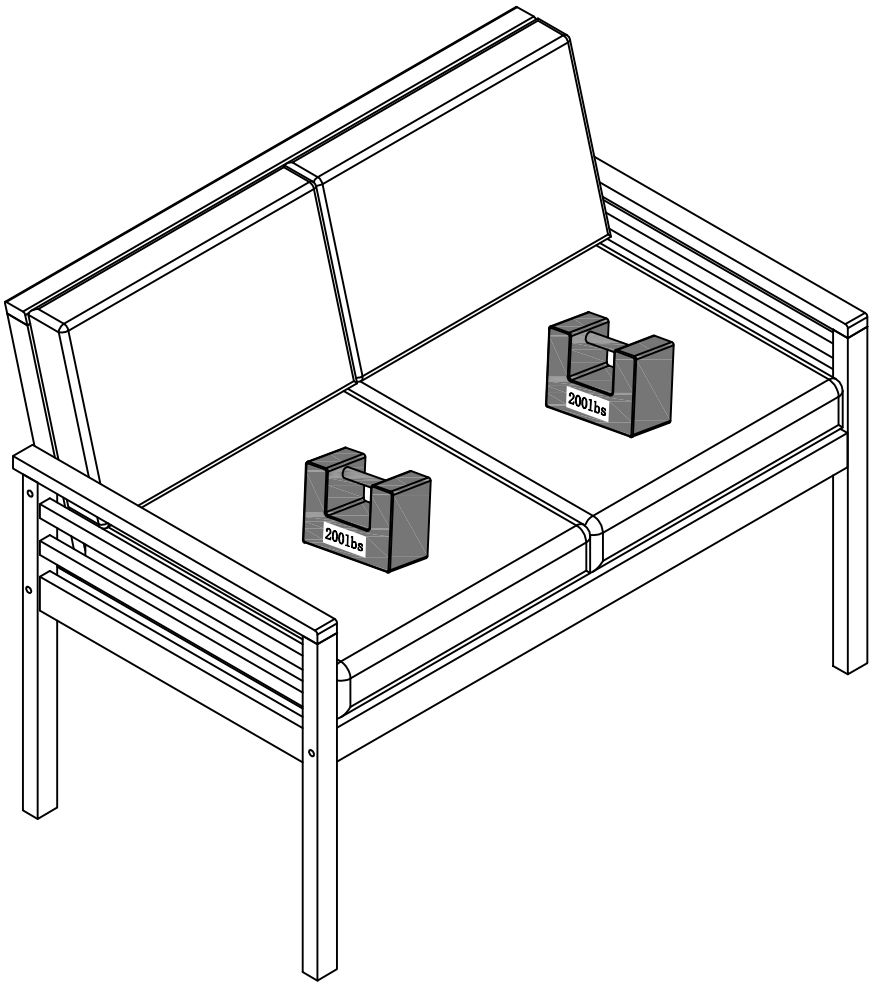
200lbs
200lbs