Aluminium Pet Cage Assembly Manual

for Model No.

ACDC01 ACDC05
ACDC07 ACDC08
ACDC09 ACDC10

NOTICE

Please read the manual and identify all parts using the parts list and labels on the parts.
Familiarise yourself with the parts and steps before assembling.
Layout each part needed for a step before working on that step.
Follow the manual step by step.
Keep this manual for future reference.

IMPORTANT

This product contains parts with sharp edges. Wear safety gloves and handle with care.

Parts List

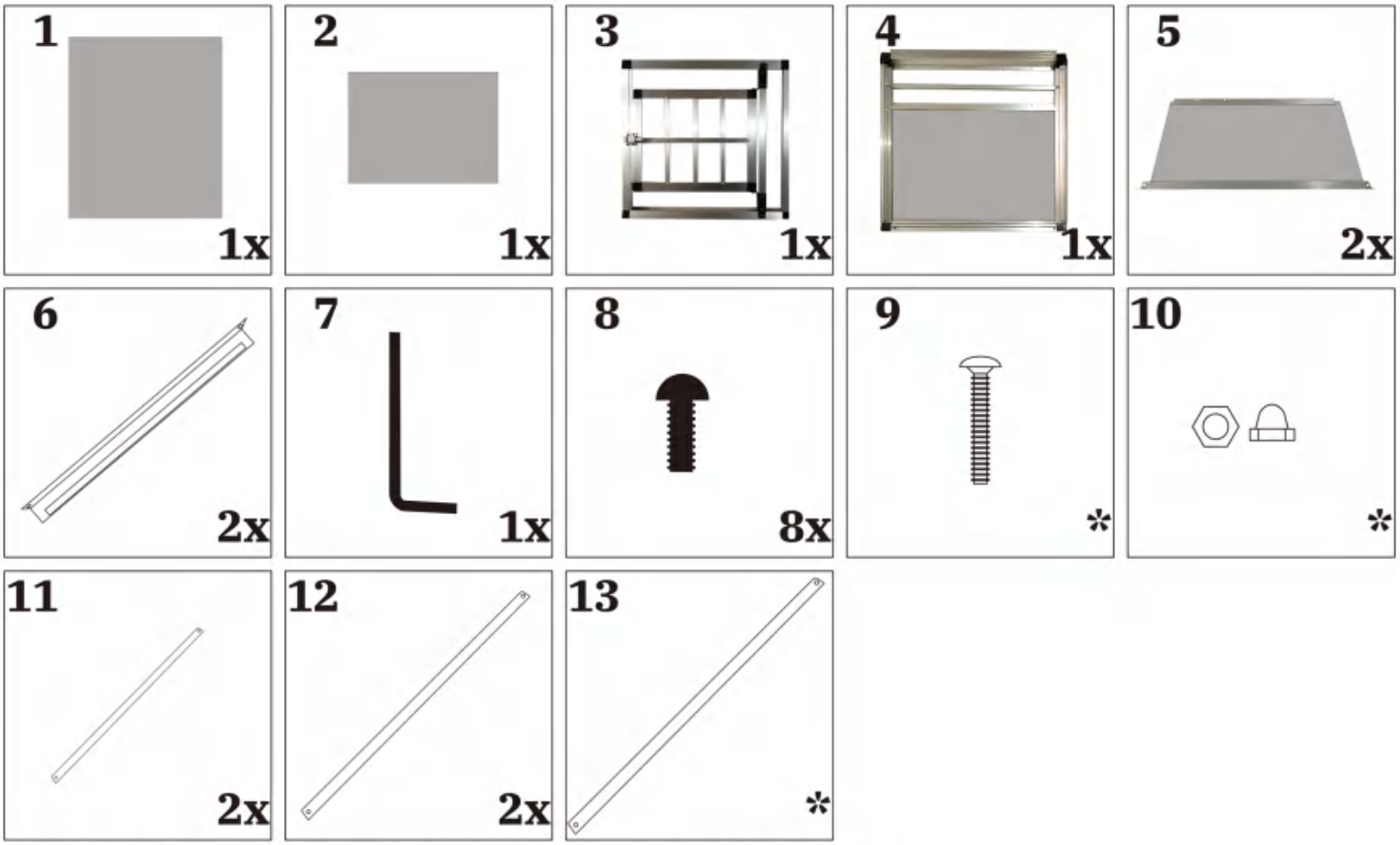

*** Quantity of Part No. 9, 10, 13 used in each model**

Model	M4x15 Bolt (9)	M4x15 Bolt Cap (10)	Bar3 (13)
ACDC01	8	8	0
ACDC05	12	12	2
ACDC07	12	12	2
ACDC08	12	12	2
ACDC09	12	12	2
ACDC10	12	12	2

Notice

Part No. 3 is the front door and 4 the back wall. The front door and back wall you receive may look slightly different than the ones shown above, because this is a generic manual for all ACDC Pet Cage models.

Steps

A

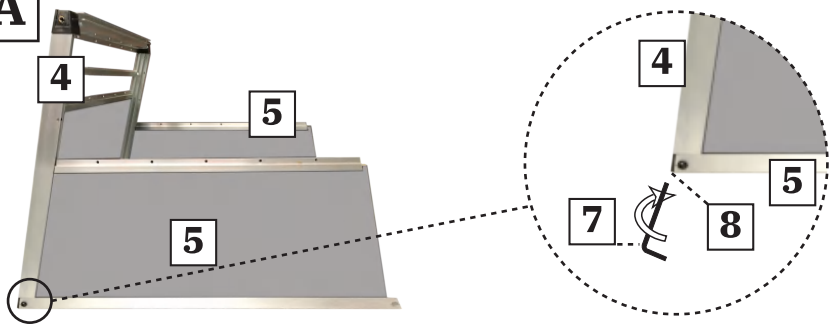

Assemble 4 and two 5 together with two 8. 5 has sharp edges. Handle with care.

B

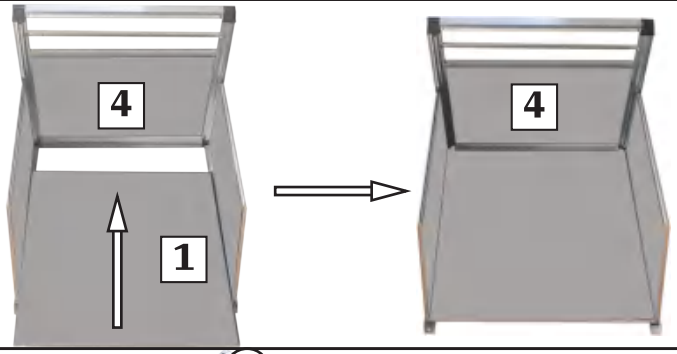

Insert 1. Make sure the board goes into the grooves of 4.

C

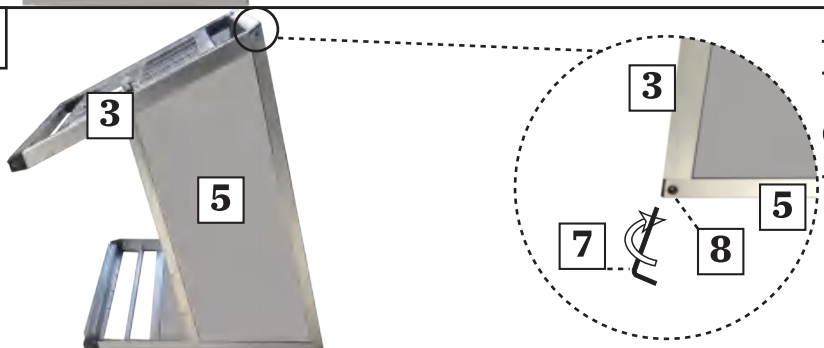

Assemble 3 and the frame together with two 8. For an easy assembly, turn the box upside down.

D

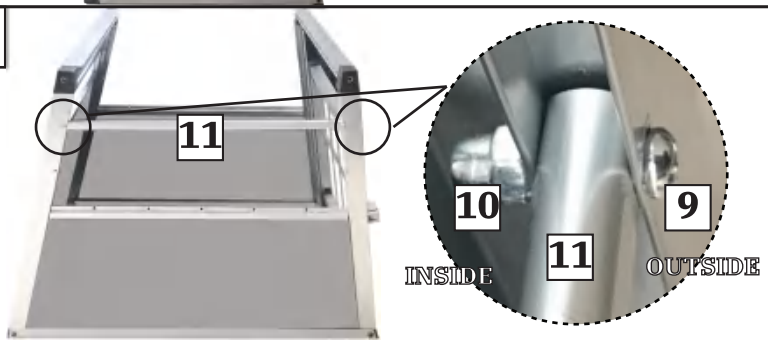

Assemble the bars and fasten them with 9 and 10. Notice this manual exemplifies this step using a product with four bars. There are also products with six bars.

E

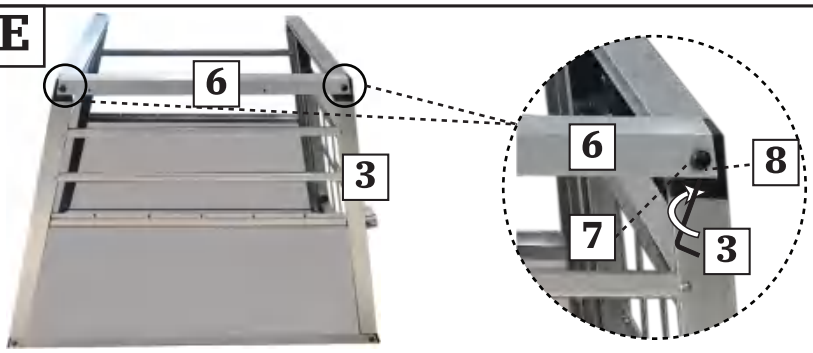

Assemble 6 and the frame together with two 8. 6 has shape edges. Handle with care.

E

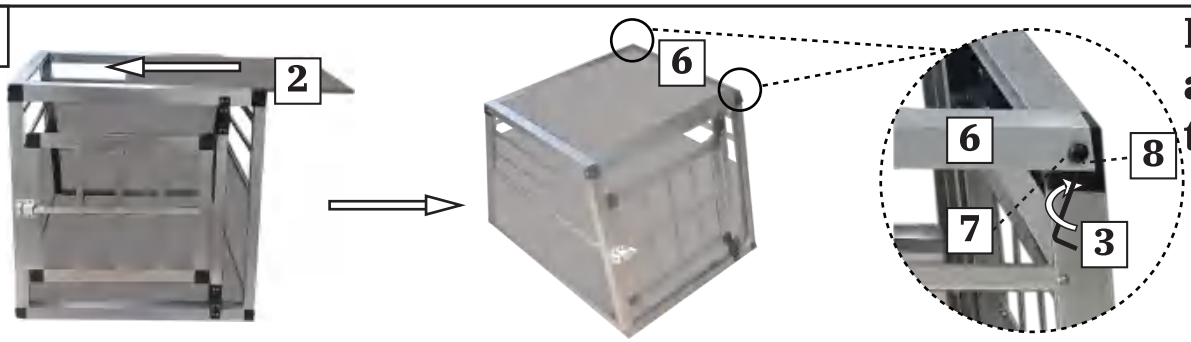

Insert 2 and assemble the last 6.