626-679-3588
service@getprohome.com
www.getprohome.com
162 Atlantic St, Pomona, CA 91768

DIMENSION DETAILS

BATHROOM VANITY TOP

SCAN ME
PRODUCT INSTRUCTION VIDEO

MODEL GP-RT30-BS



PRODUCT DIMENSIONS

30 3/8" x 21 13/16" Solid Surface Vanity Top with Single Center Sink, 1 Backsplash

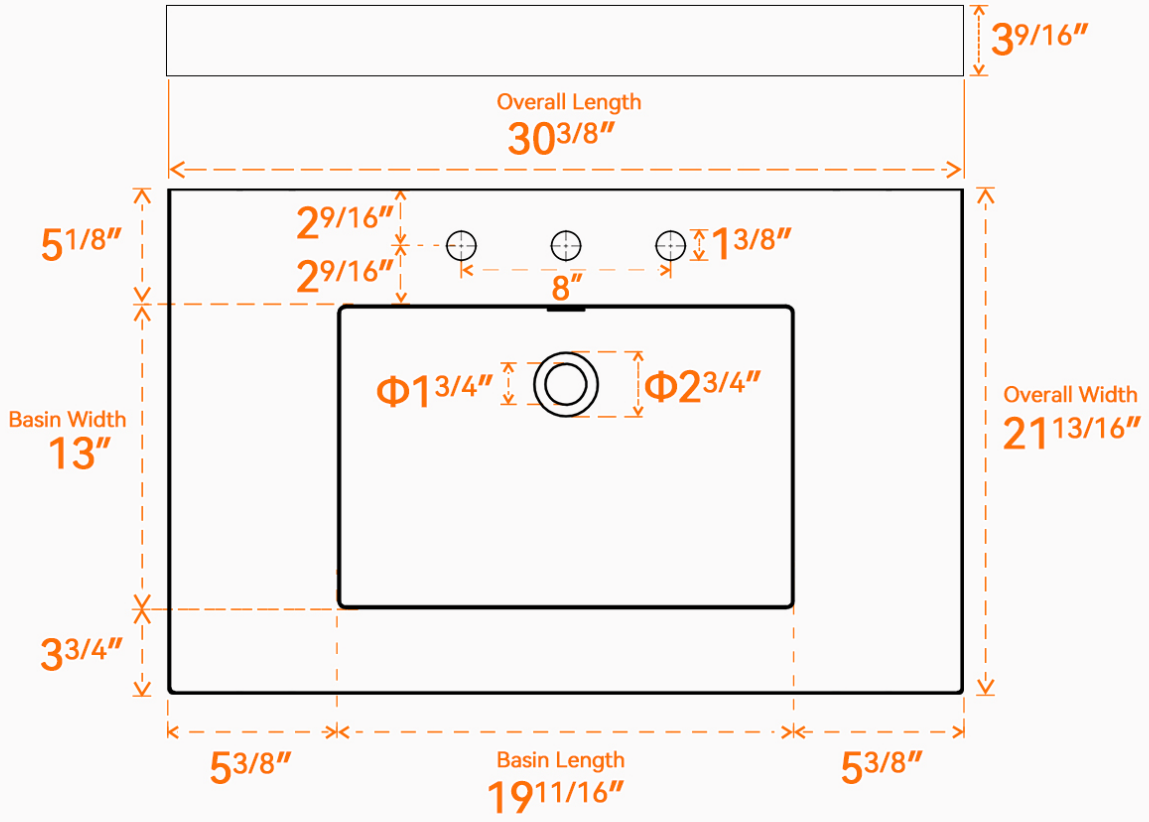

Top View

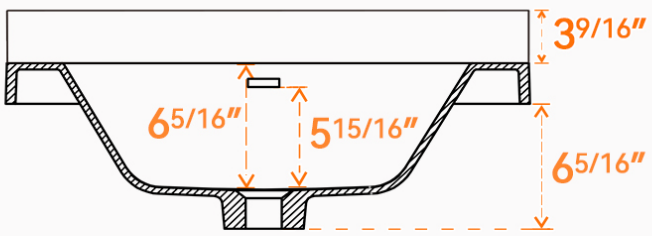

Front View

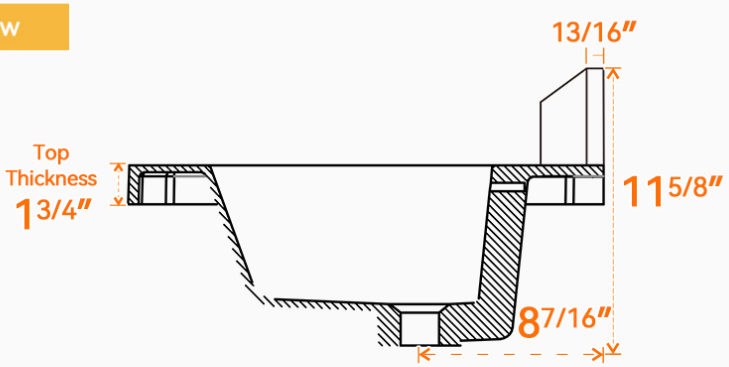

Side View