Installation & Assembly

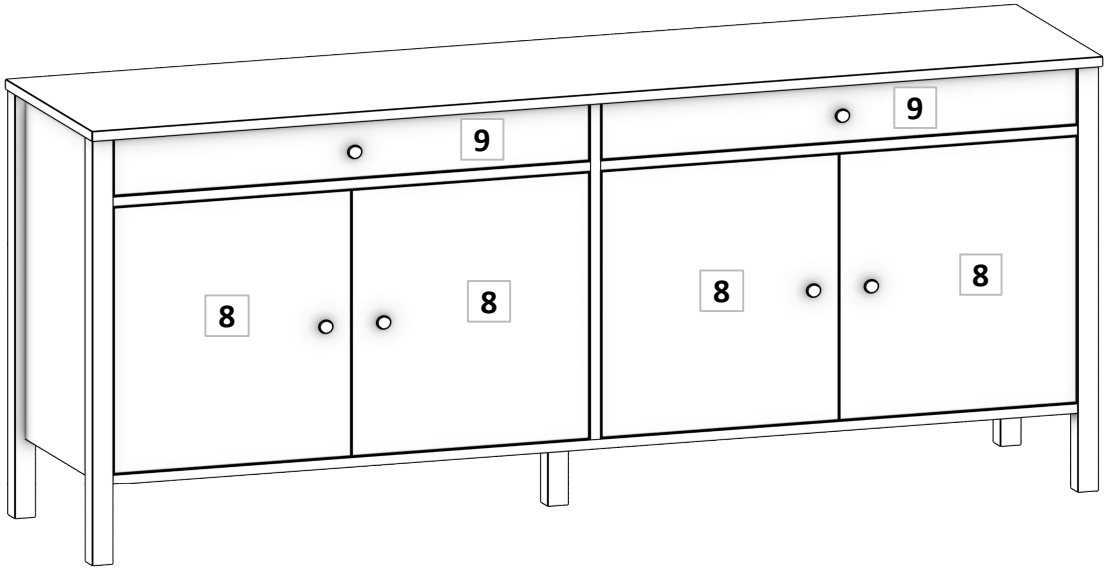

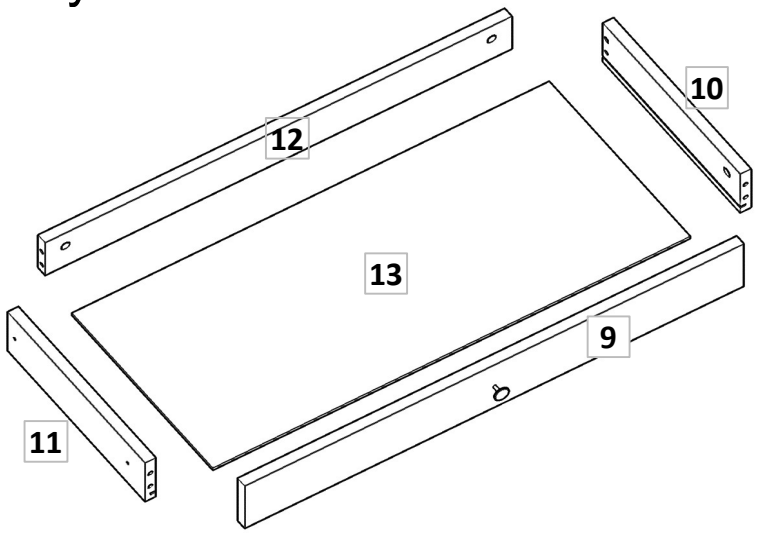

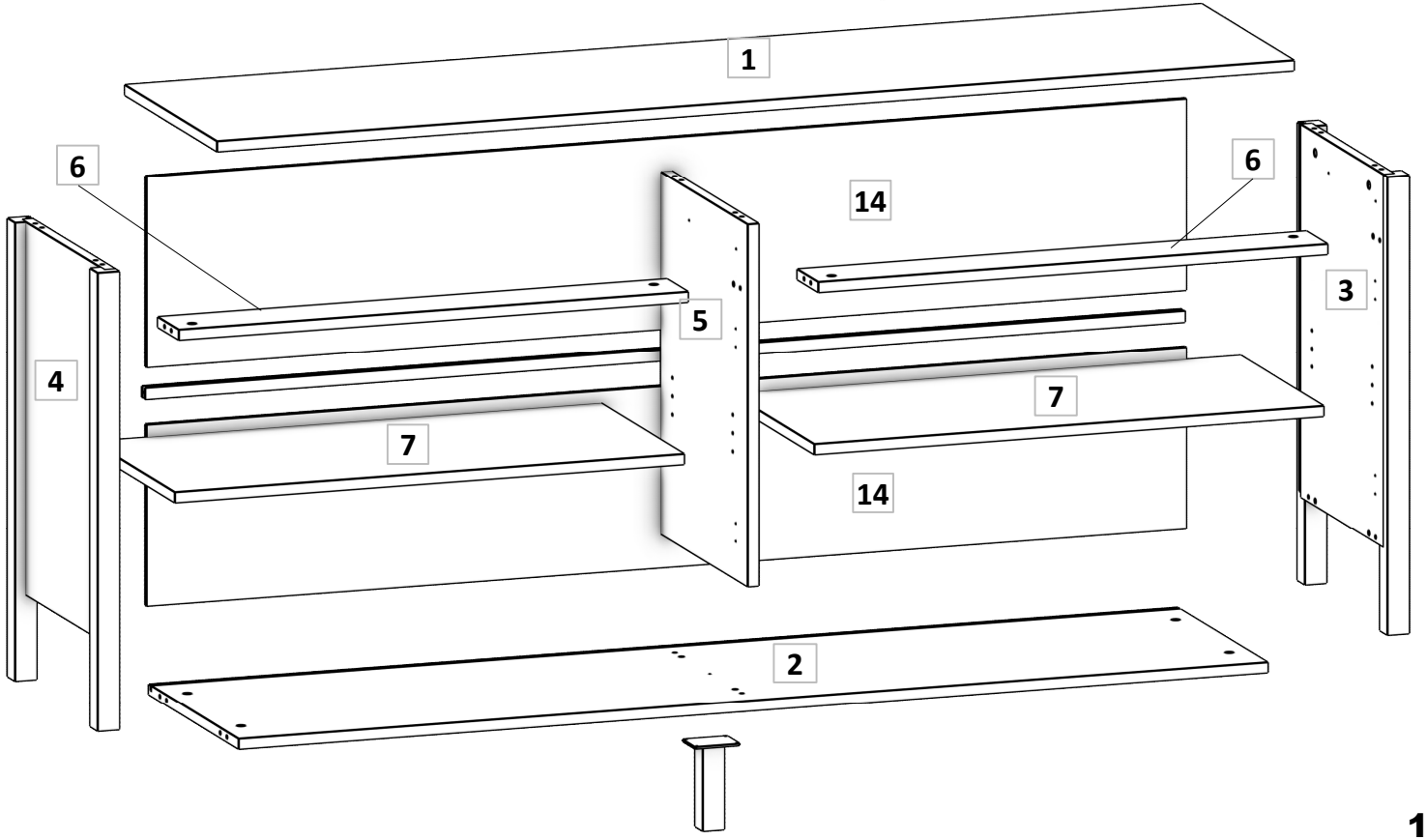

PART LIST

PART NO	PART NAME	QTY.
1	TOP PANEL (1802 mm X 440 mm)	1
2	BASE PANEL (1720 mm X 430 mm)	1
3	RIGHT SIDE PANEL (802 mm X 430 mm)	1
4	RIGHT LEFT PANEL(802 mm X 430 mm)	1
5	MIDDLE PARTITION PANEL (634mm X 414mm)	1
6	HORIZONTAL SUPPORT (851 mm X 100 mm)	2
7	LOOSE SHELVES (851 mm X 395 mm)	2
8	DOOR (500 mm X 421 mm)	4
9	DRAWER FRONT (845 mm X 104 mm)	2
10	DRAWER RIGHT SIDE (350 mm X 95 mm)	2
11	DRAWER LEFT SIDE (350 mm X 95 mm)	2
12	DRAWER BACK PANEL (790 mm X 80 mm)	2
13	DRAWER BOTTOM (5 mm)(808 mm X 359 mm)	2
14	BACK PANEL (5 mm)(1738 mm X 326 mm)	2

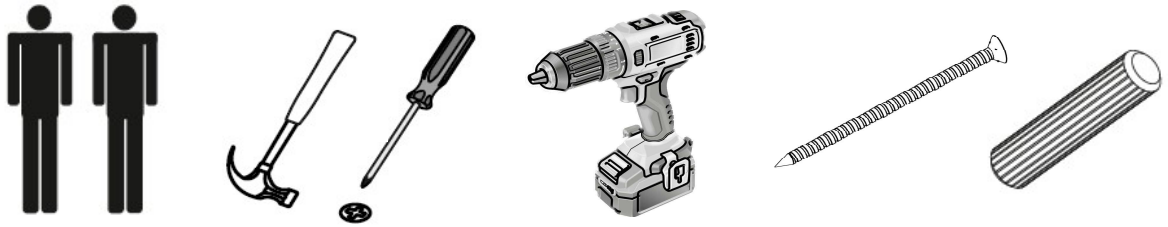

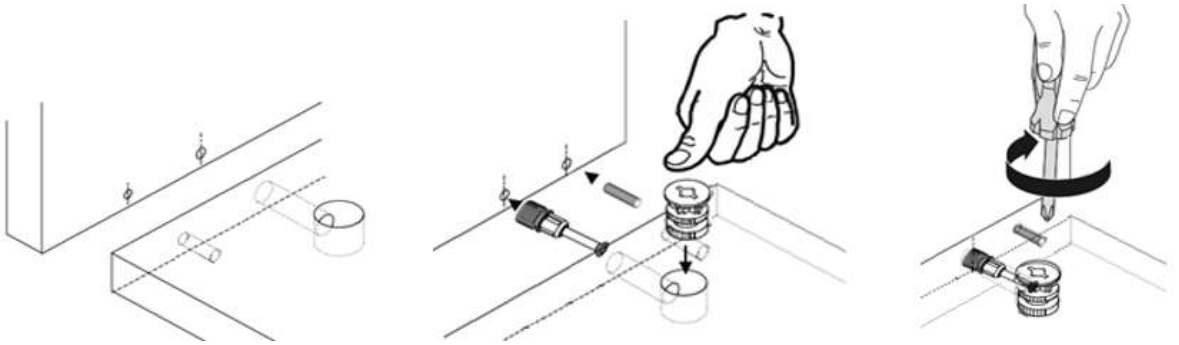

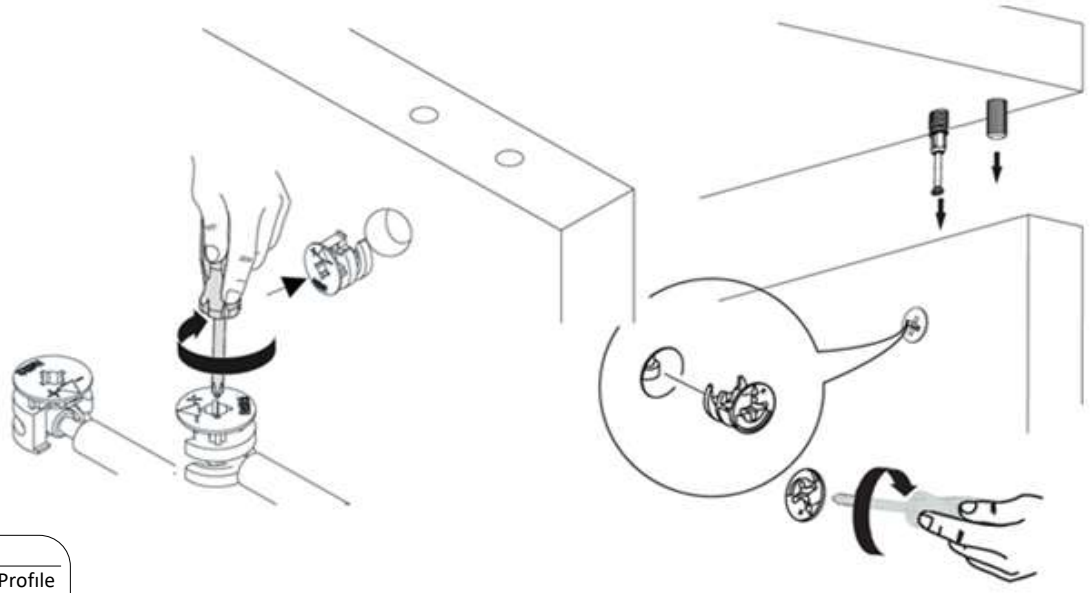

: **A**
Minifix Cam

QTY 24 | Ø:8

: **B**
Minifix Bolt

QTY 24

: **C**
Dowel

QTY 24

: **D**
Countersunk Screw
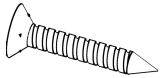
QTY 58 | 3,5x18

: **E**
Handle Screw

QTY 6 | 4x22

: **G**
Shelf Stud

QTY 8

: **H**
Backboard Stabilizer

QTY 10

: **J**
Inset Hinge

QTY 8

: **K**
Knob Handle

QTY 6

: **L**
Telescopic Drawer Slides
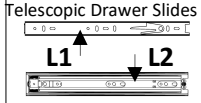

QTY 2 | 350 mm

: **M**
Minifix Cover

QTY 24

: **N**
Felt Pad

QTY 5

: **P**
Leveling Shim

QTY 1

: **R**
Middle Leg

QTY 1

: **S**
Countersunk Screw
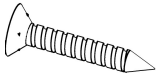
QTY 6 | 3,5x25

: **T**
Countersunk Screw
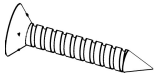
QTY 4 | 4x18

: **V**
Back Panel H Profile

QTY 1 | 1715mm

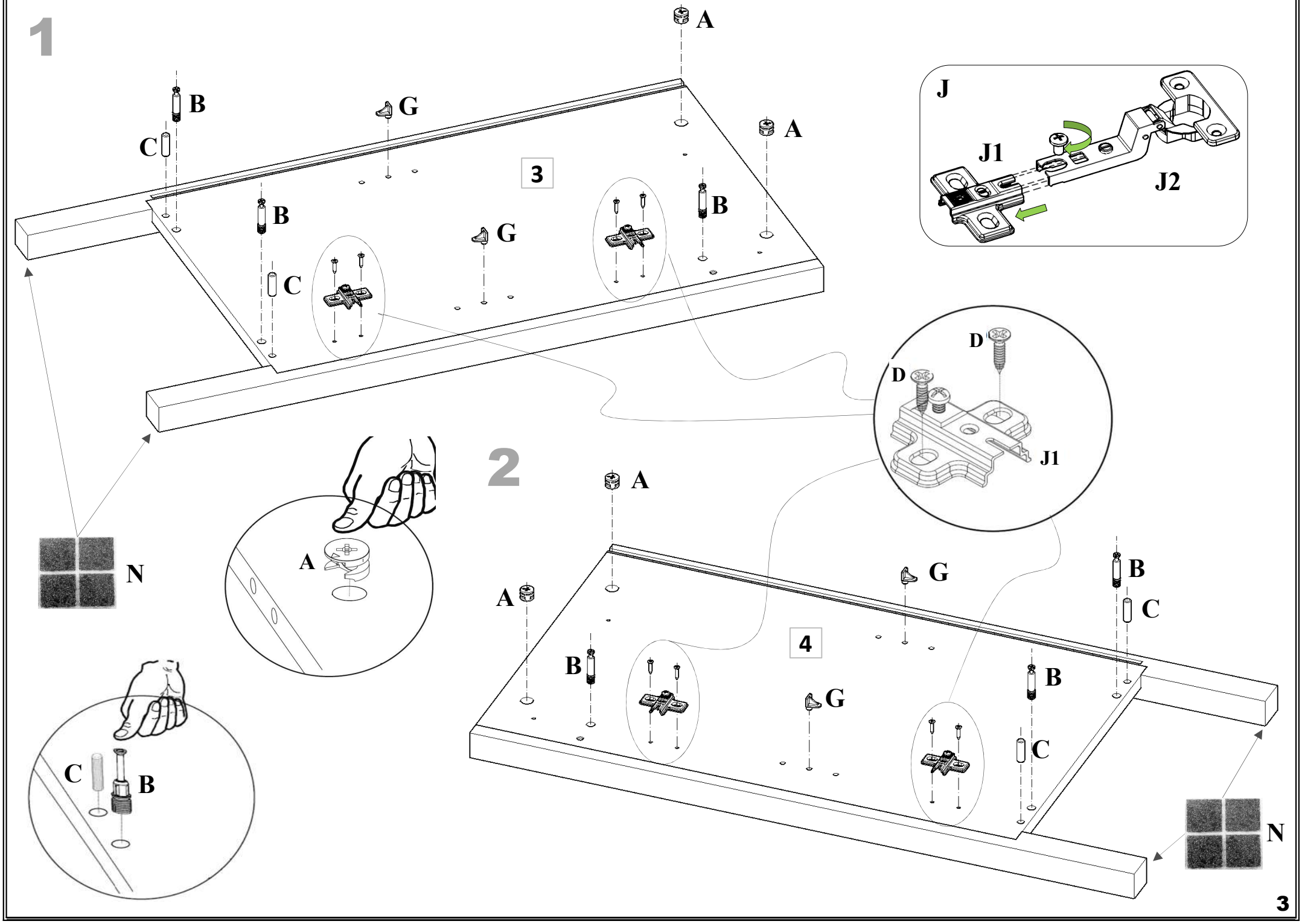
1
A
B
C
G
A
3
B
G
B
C
J
J1
J2
D
D
J1
2
A
A
G
B
C
4
B
G
B
C
N
A
C
B
N
3

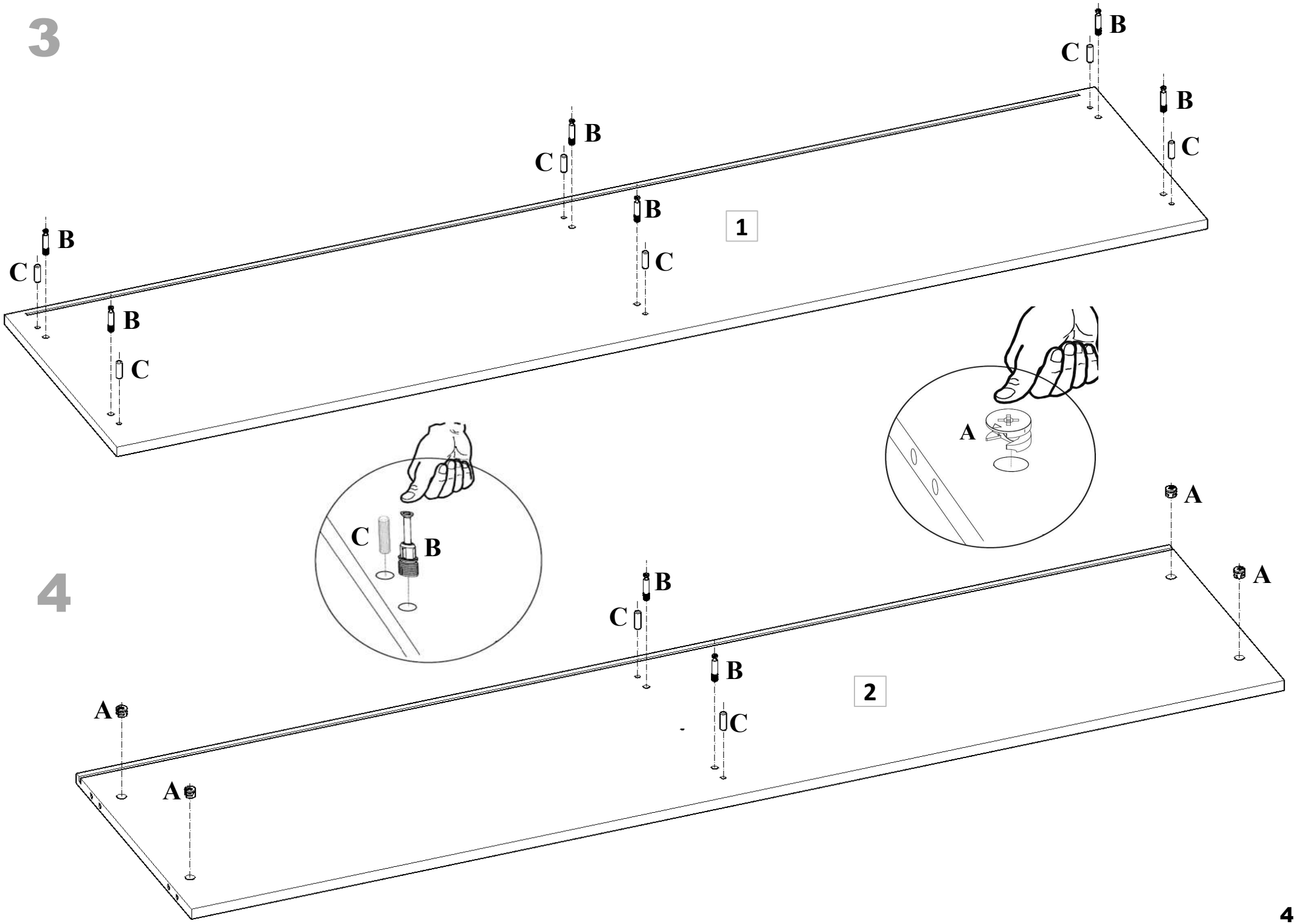
3
B
C
B
C
B
C
B
C
B
C
B
C
1
A
C
B
4
A
A
B
C
B
C
2
A
A
4

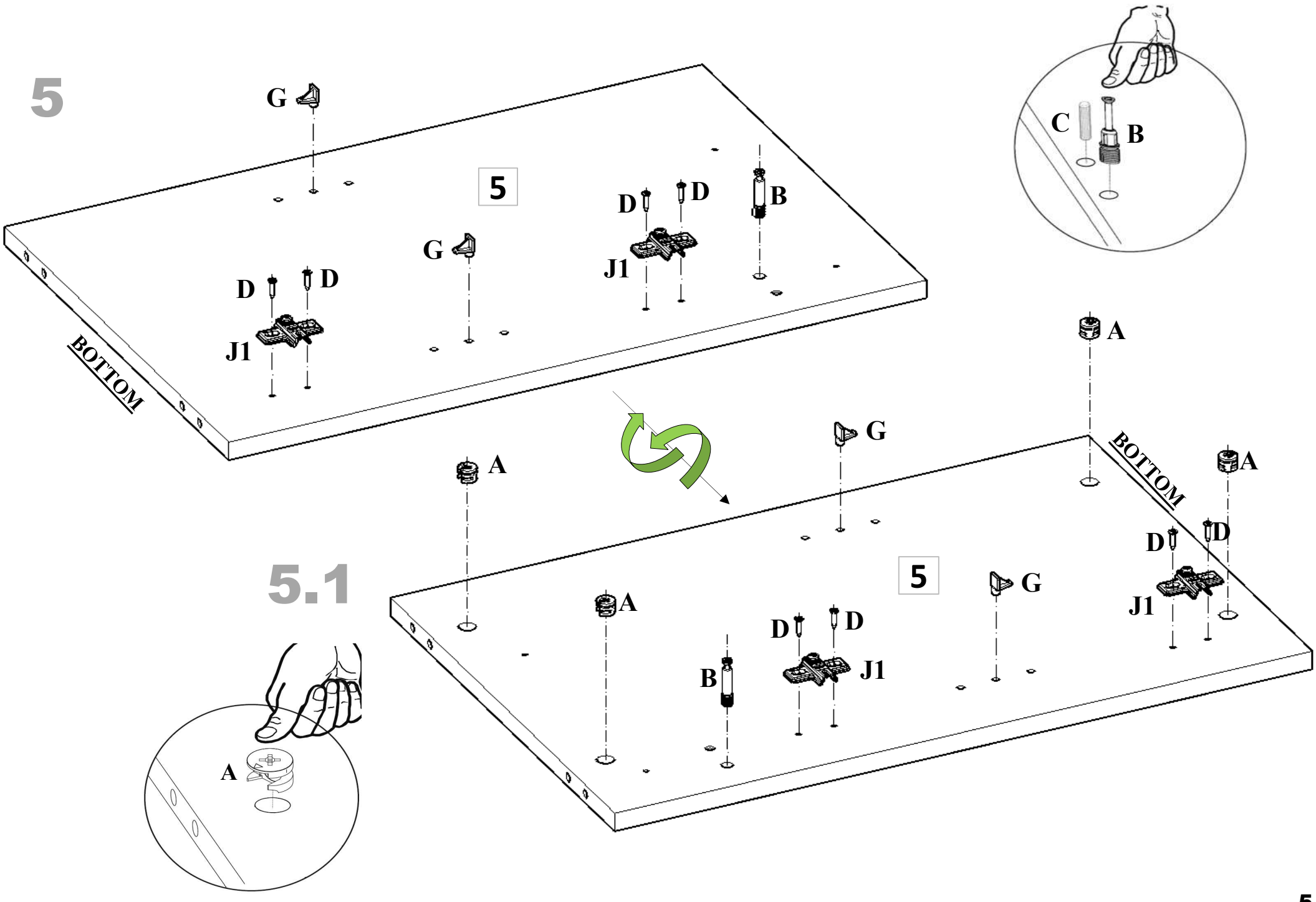
5
G
5
D
D
B
G
J1
D
D
J1
BOTTOM
C
B
A
G
A
BOTTOM
A
D
D
5
G
J1
A
D
D
B
J1
5.1
A

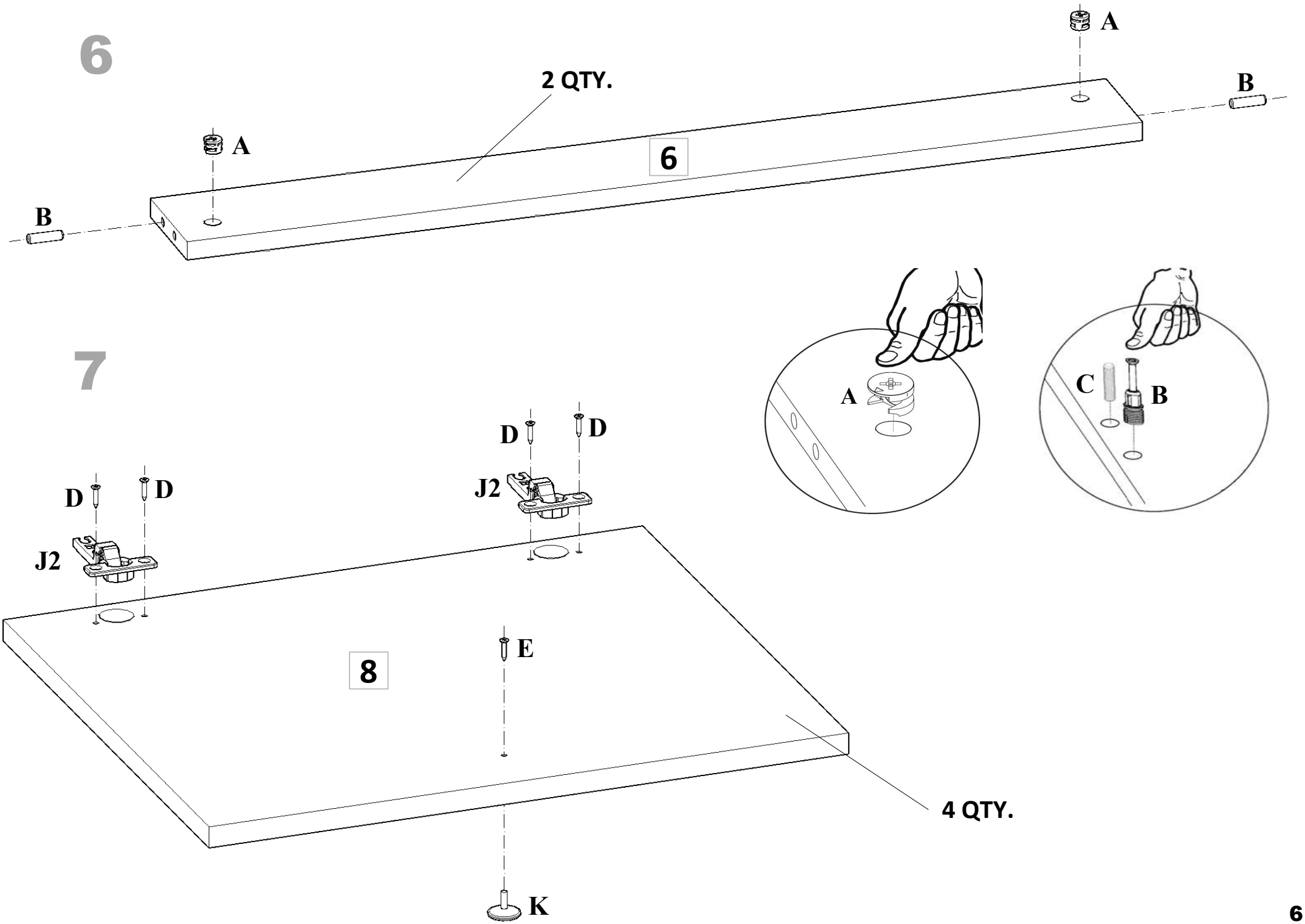
6
A
2 QTY.
B
A
6
B
7
A
C
B
D
D
J2
D
D
J2
8
E
4 QTY.
K

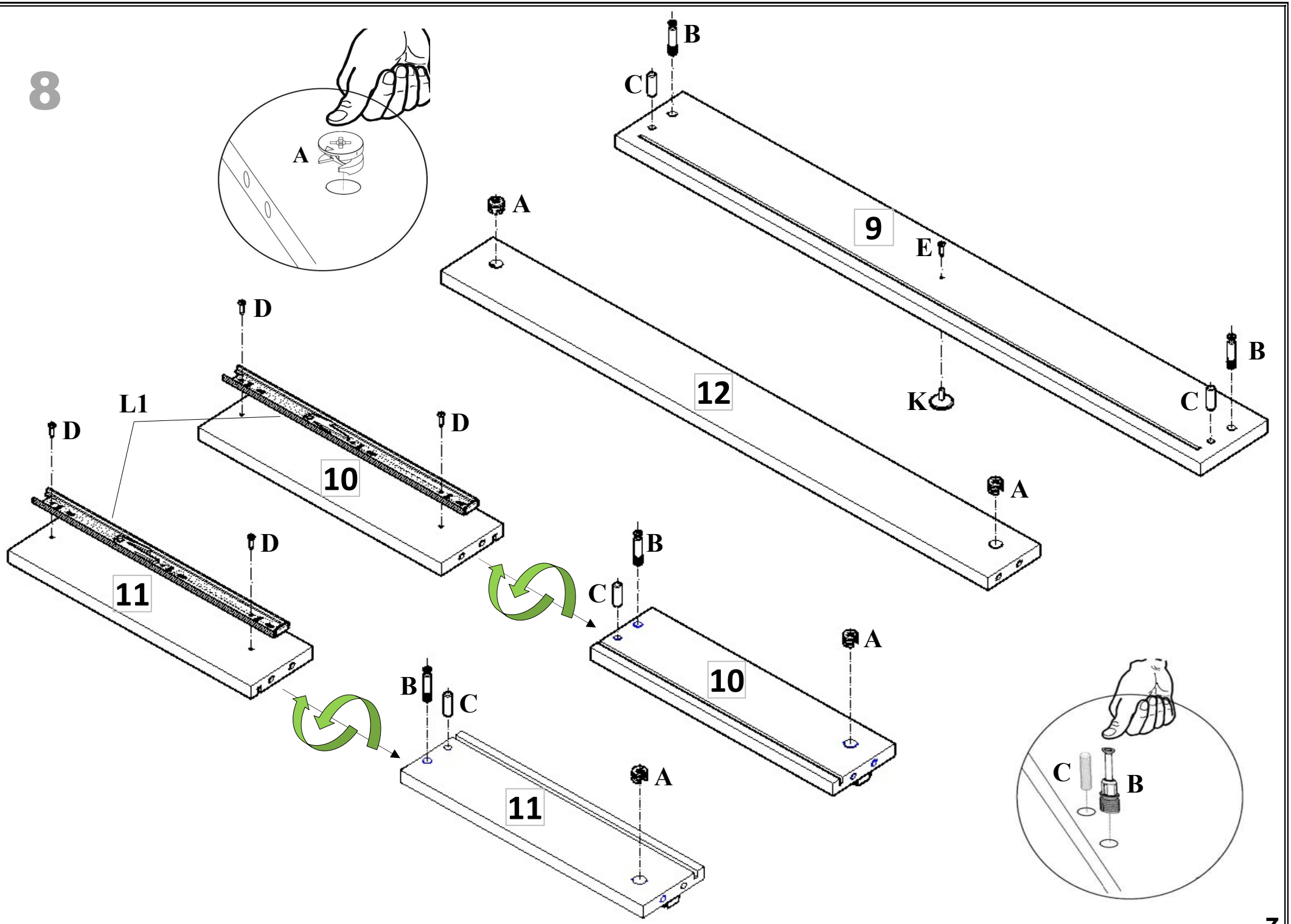
8
A
B
C
9
E
K
A
12
B
C
A
D
L1
D
10
D
11
D
B
C
10
A
B
C
11
A
C
B

9

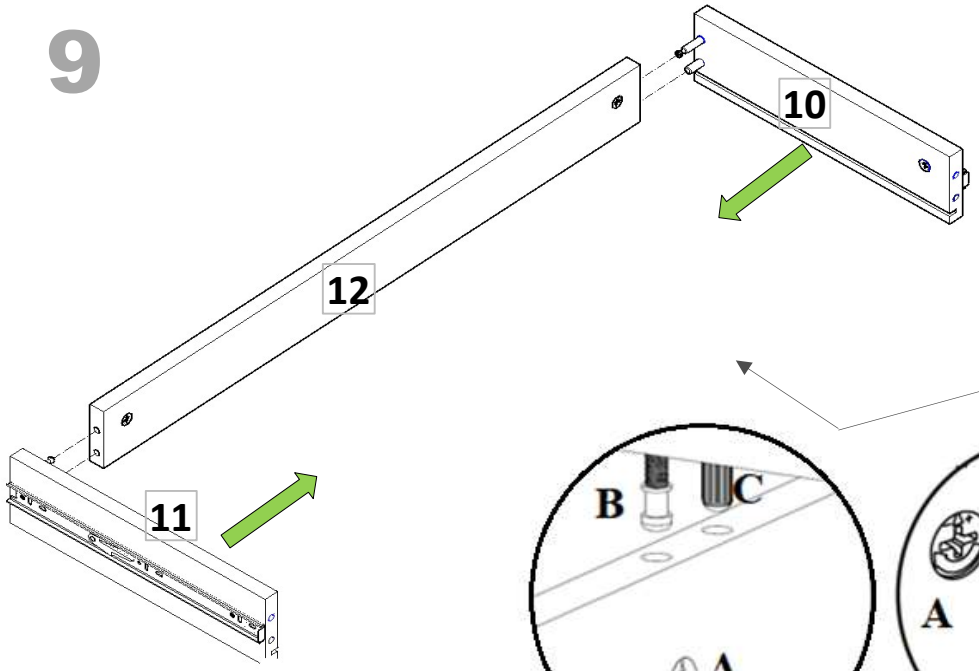

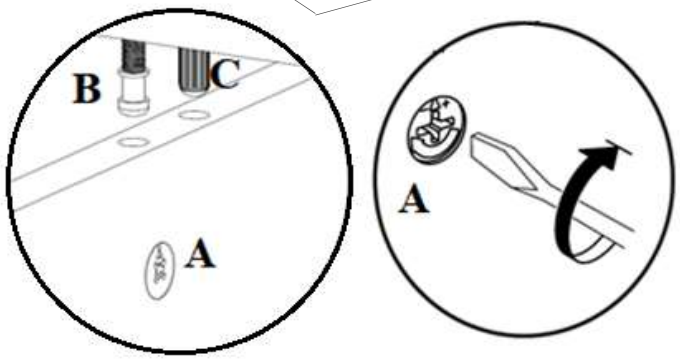

10

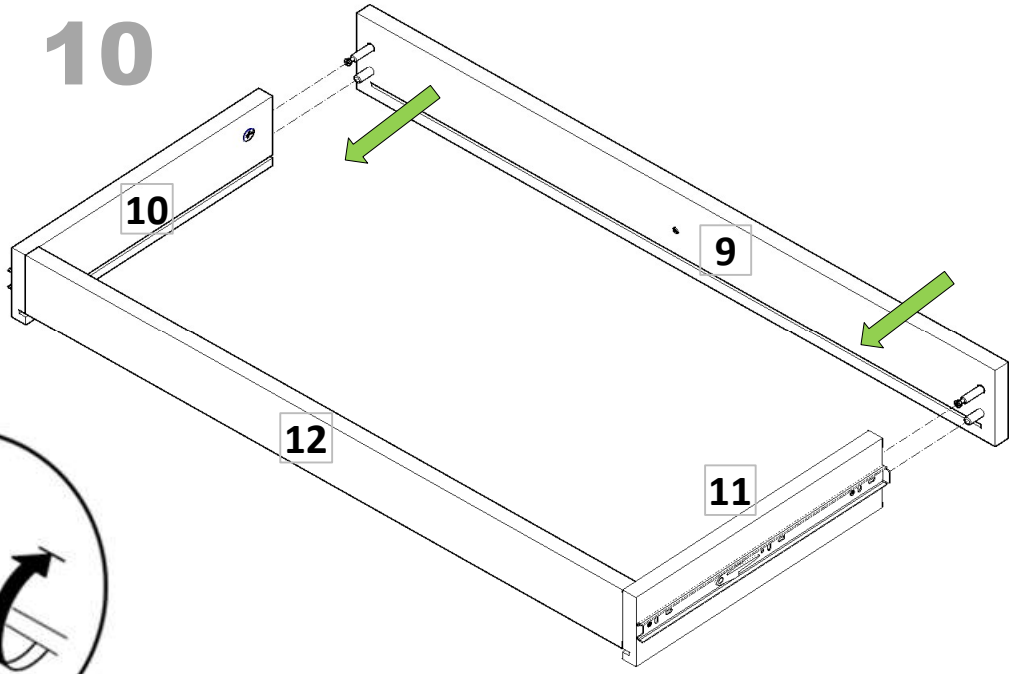

11

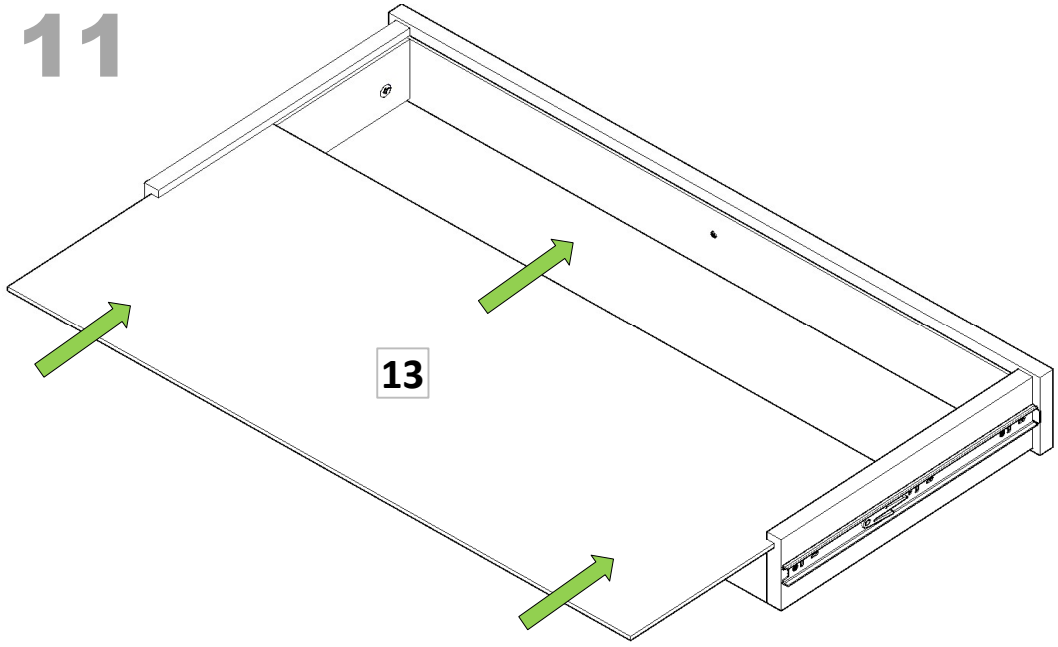

12

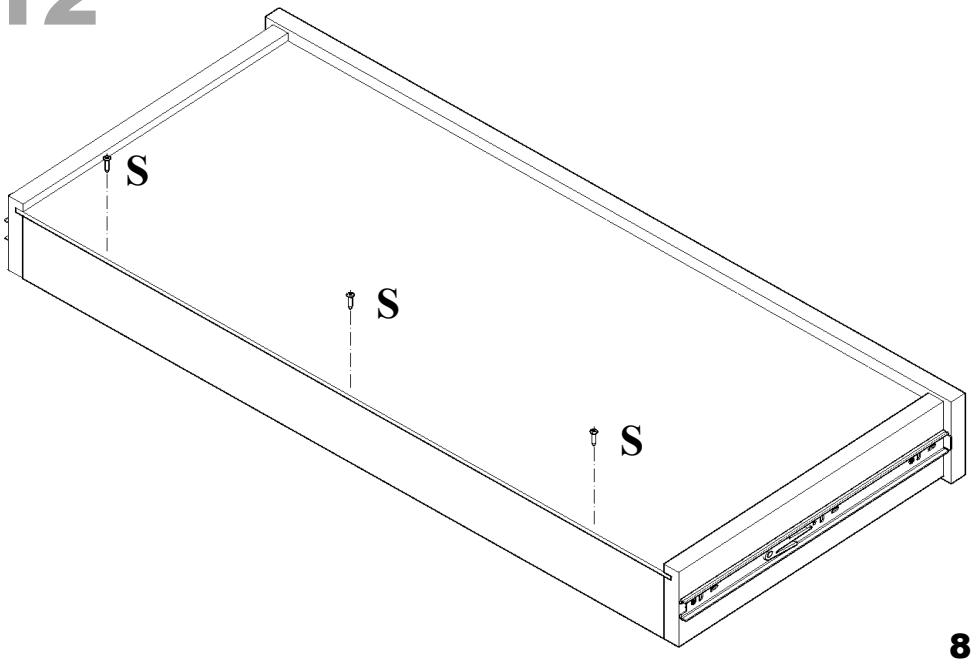

13

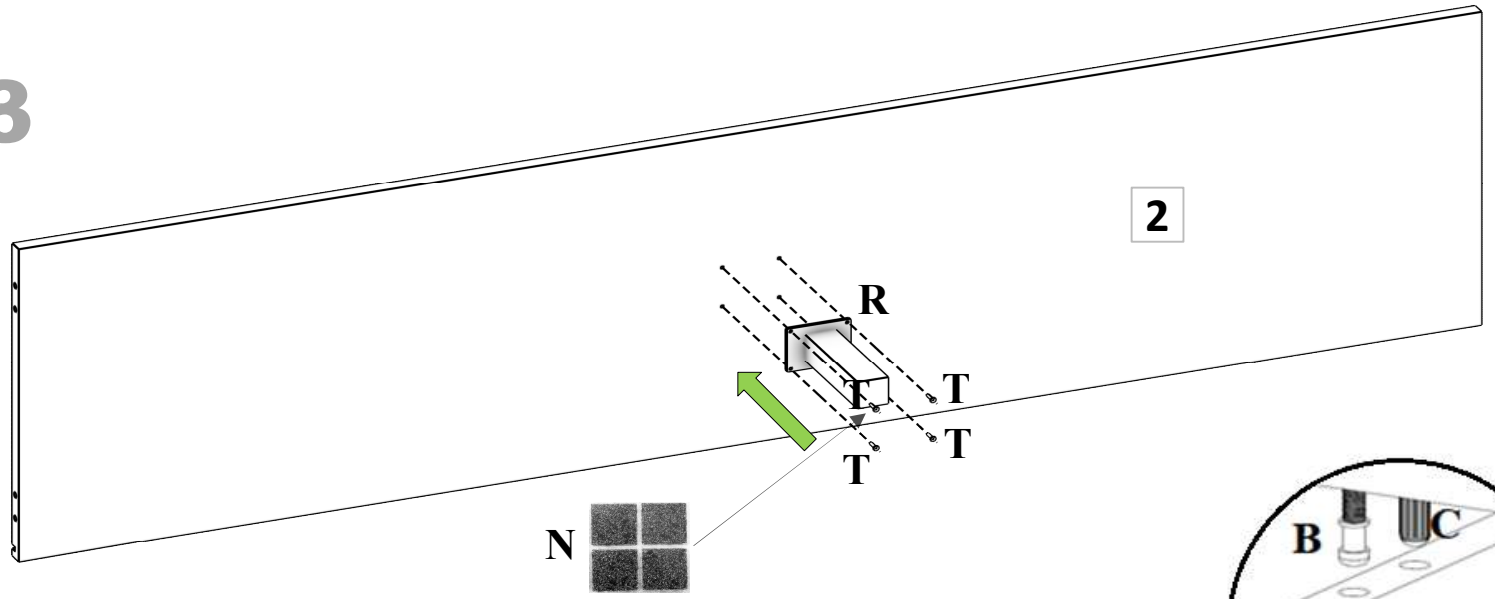

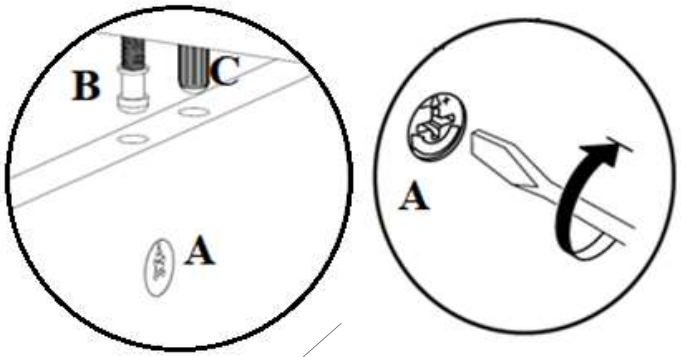

14

15

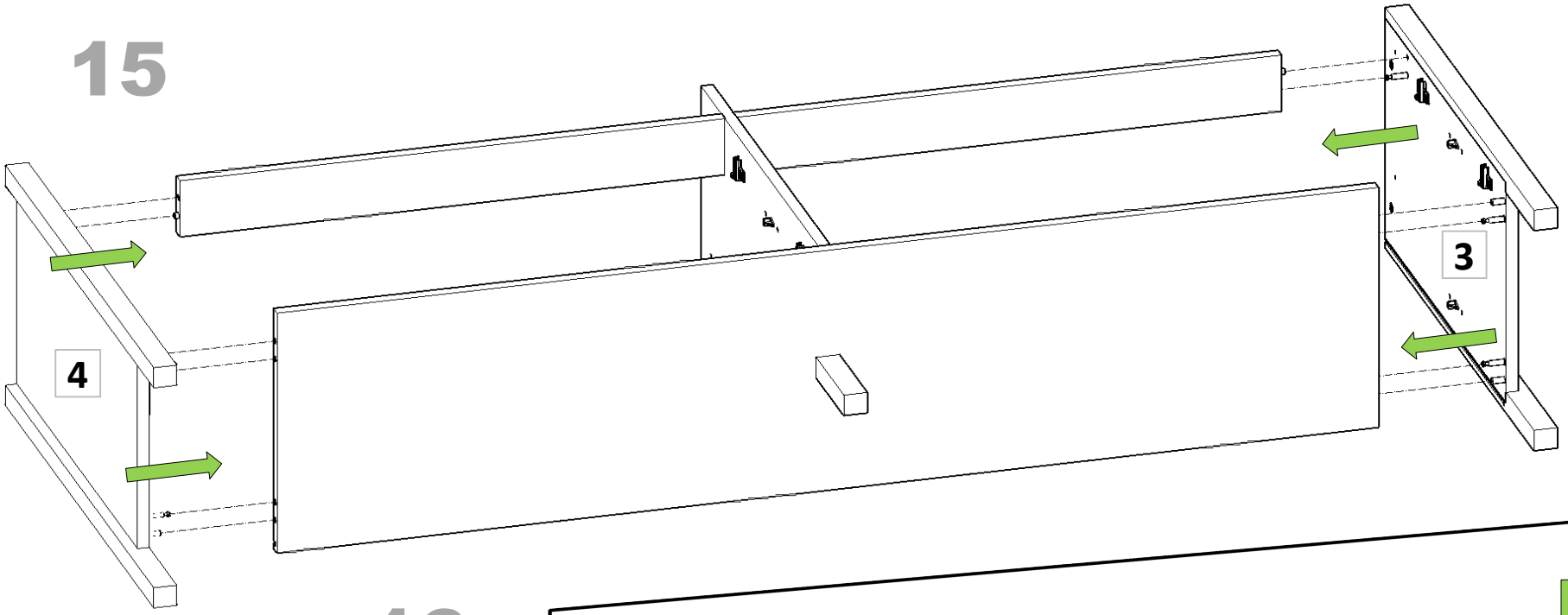

16

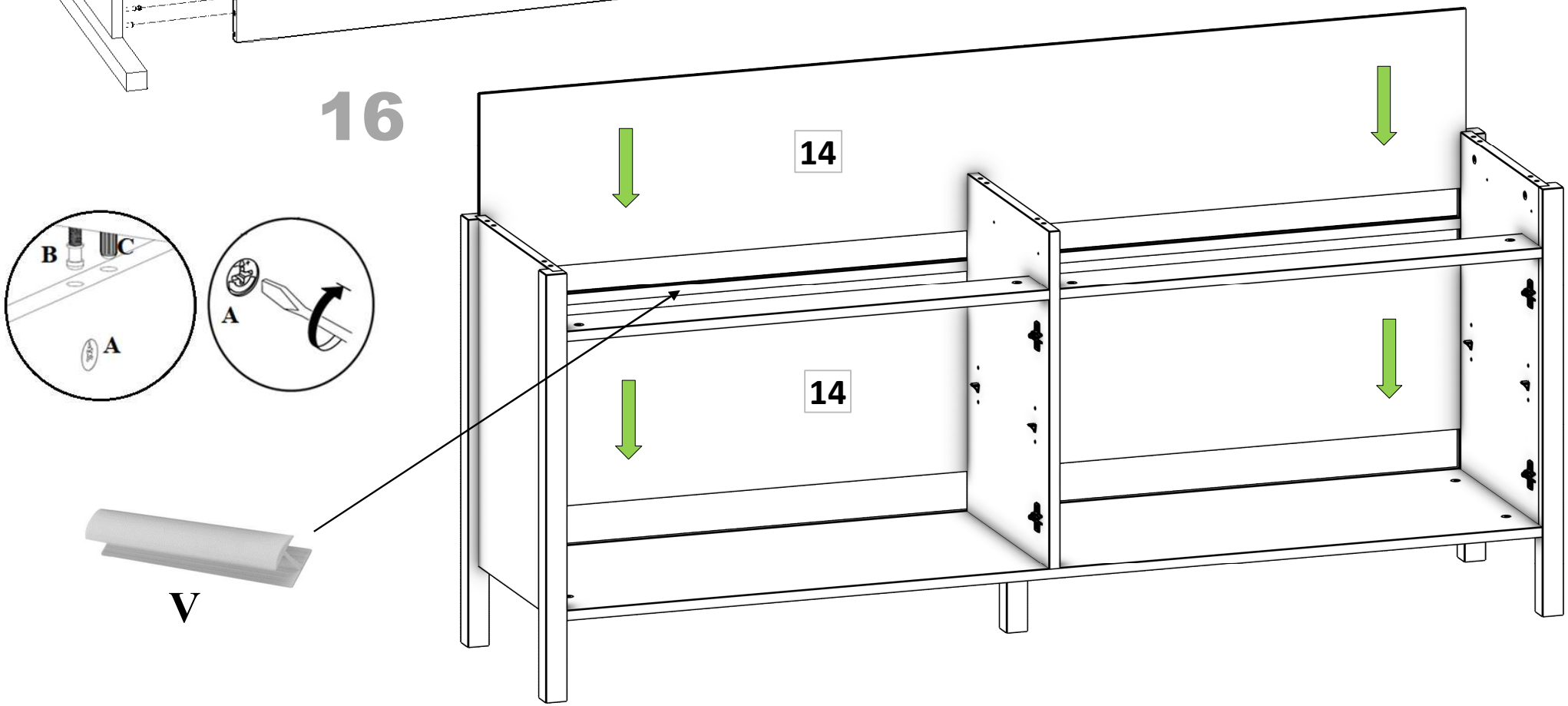

17

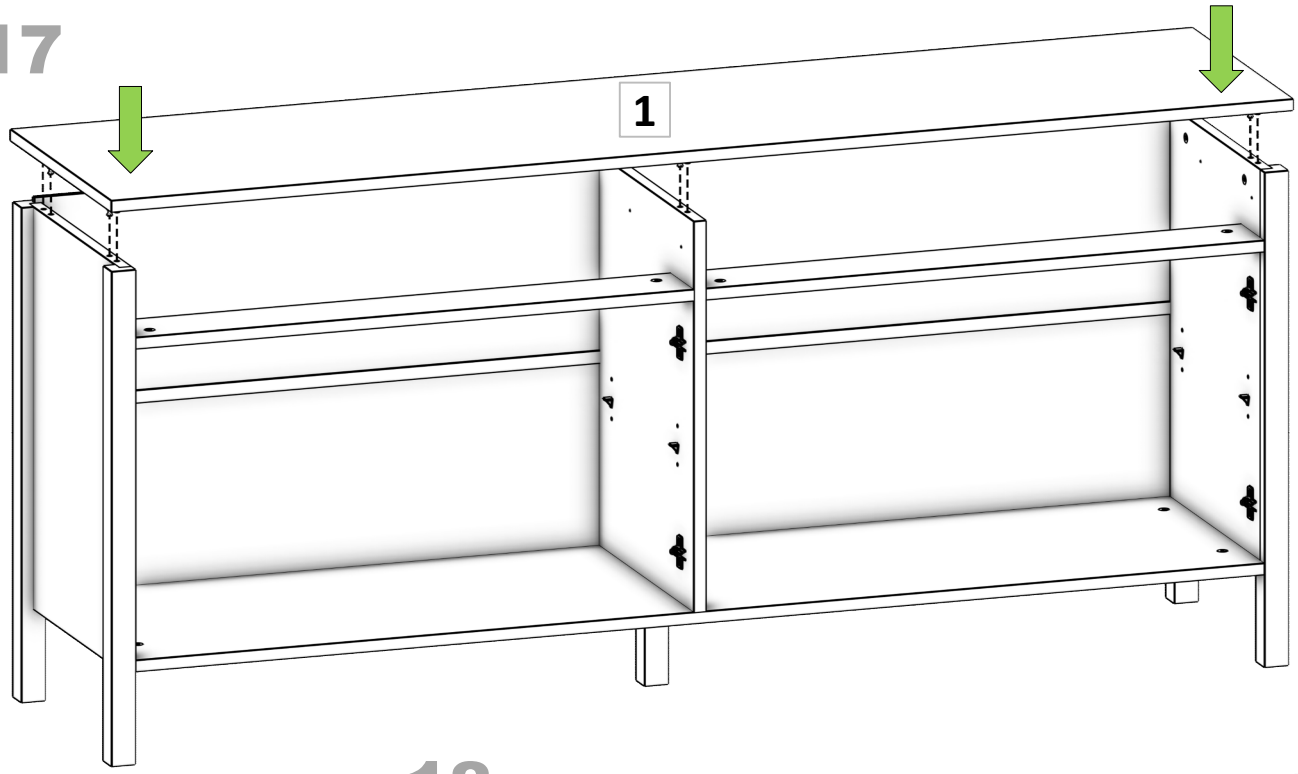

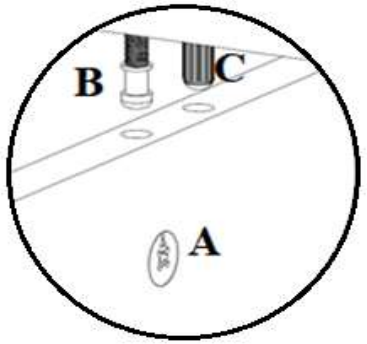



18

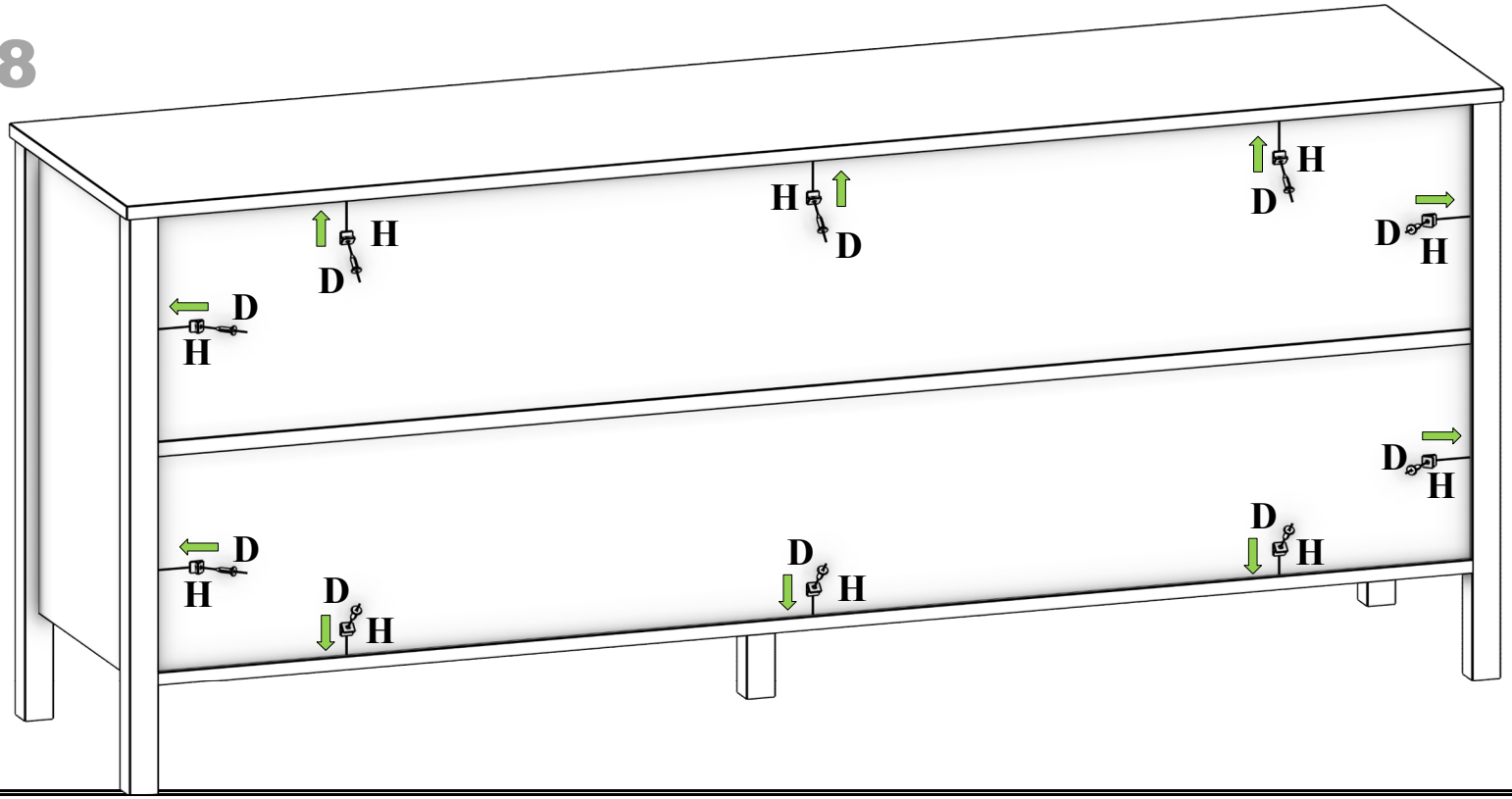

19

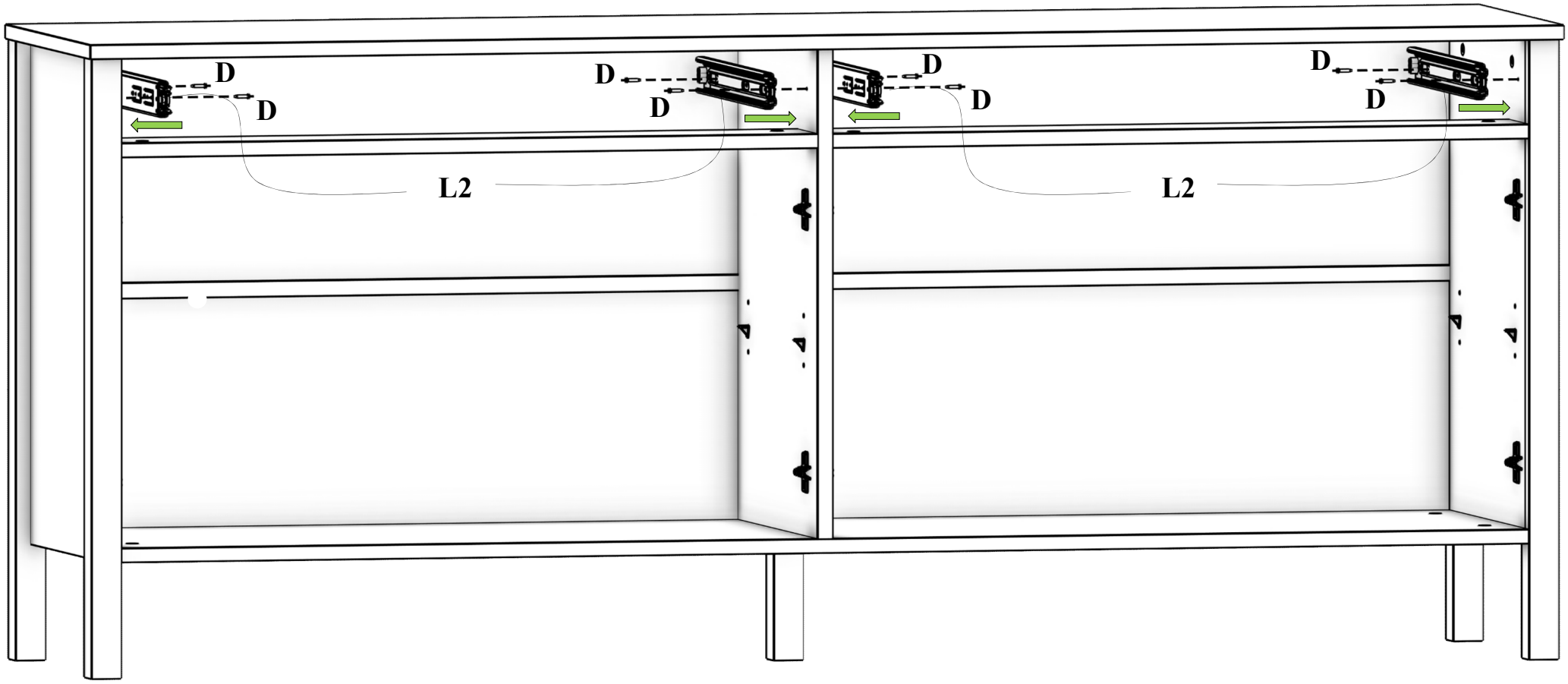

20

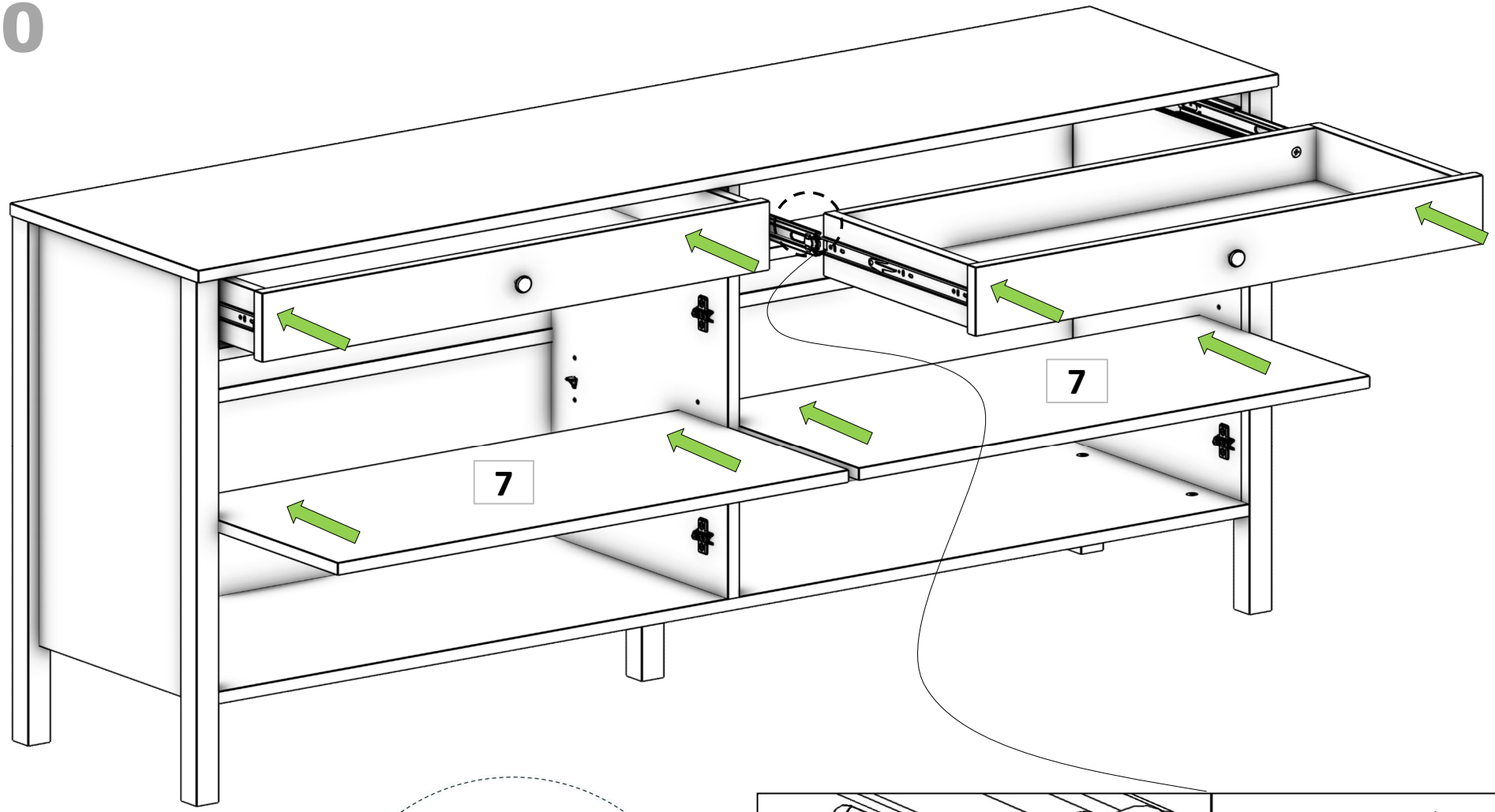

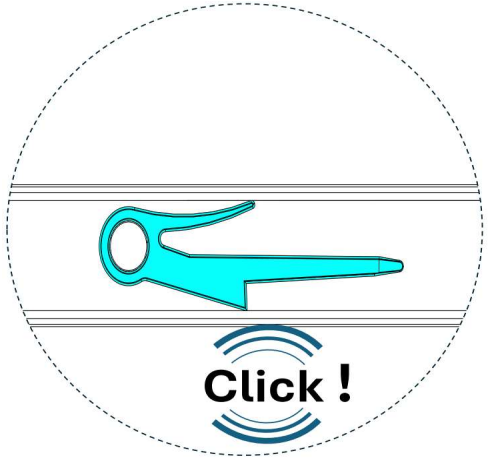

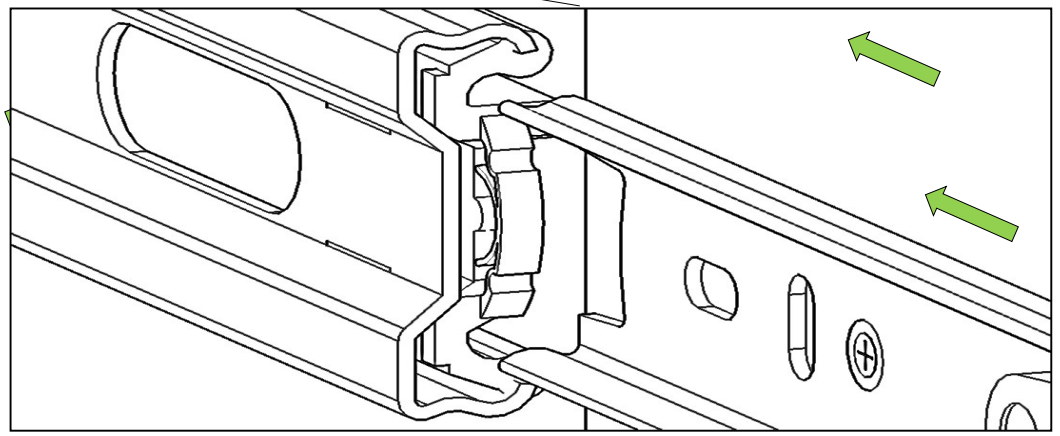

21

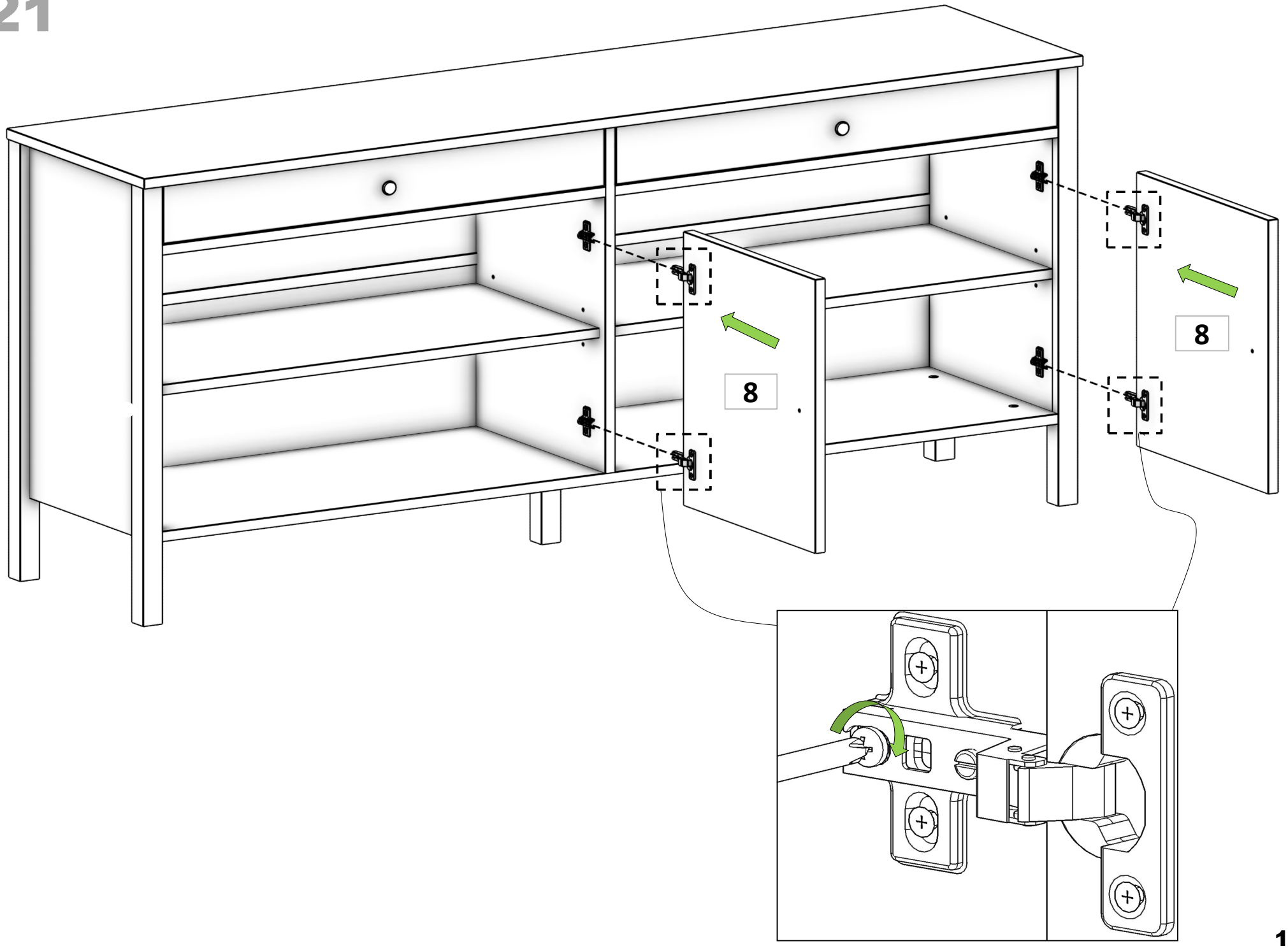

22

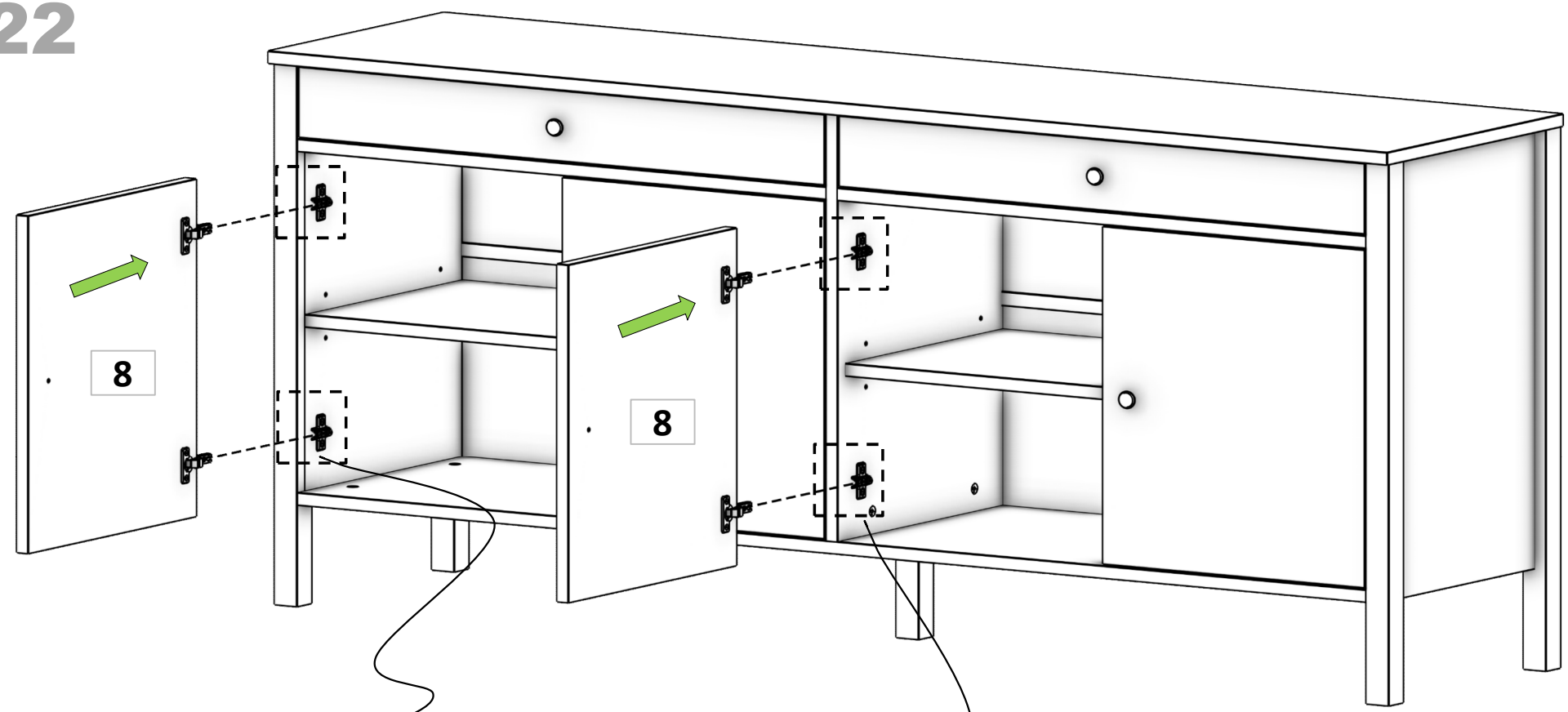

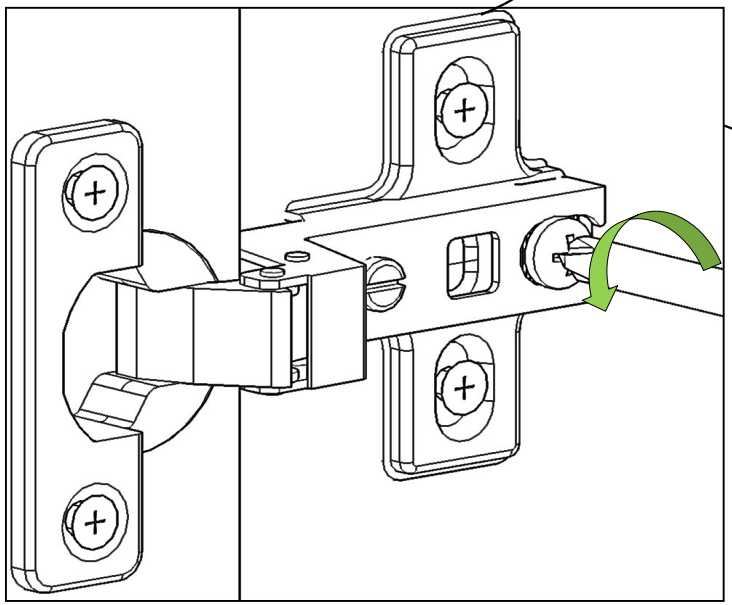

23

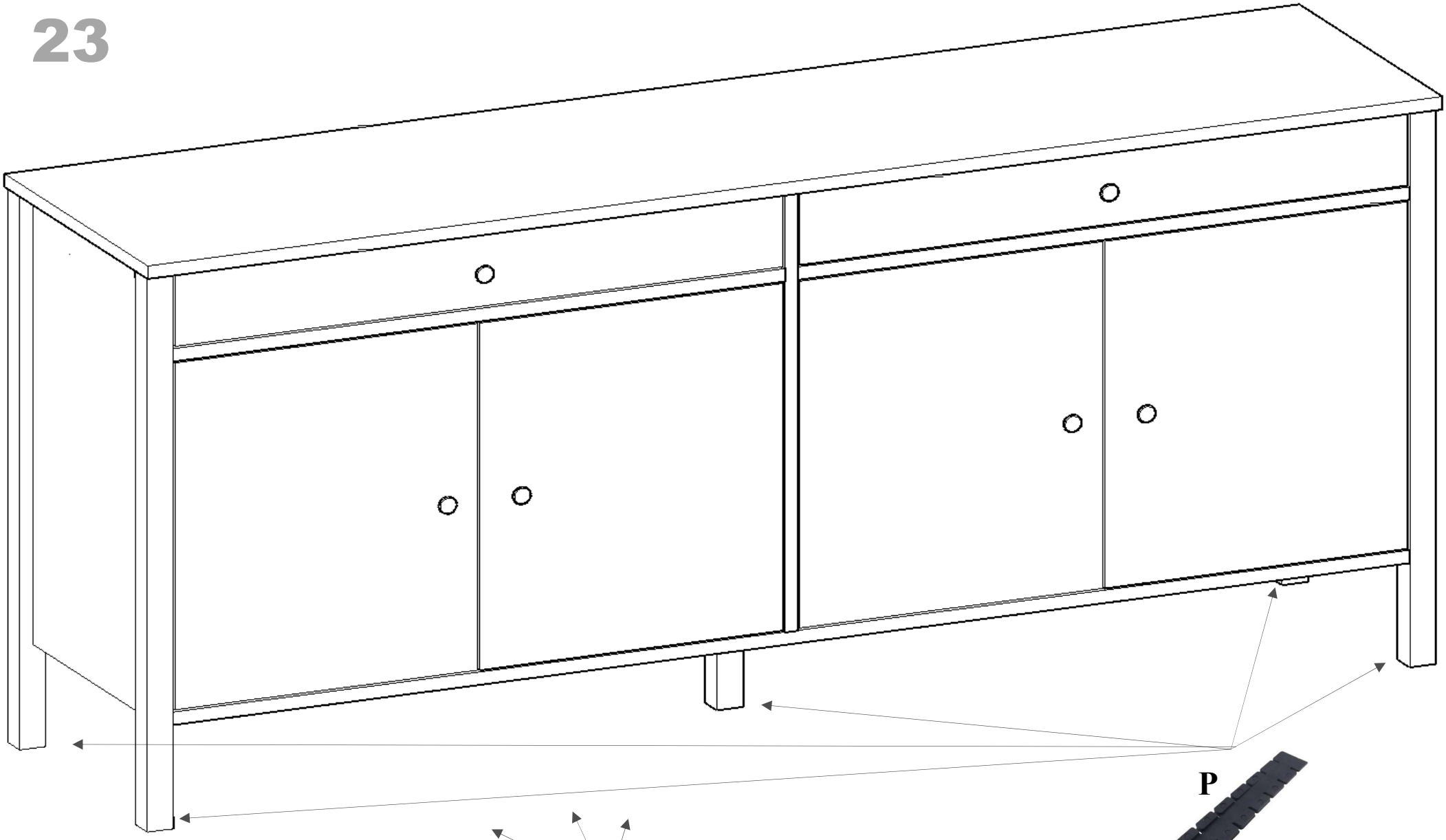

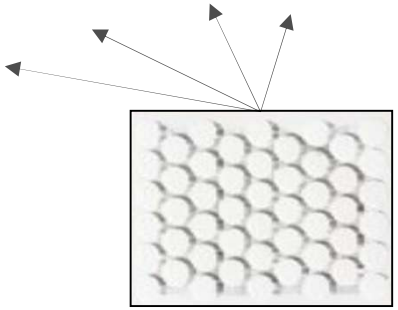

M

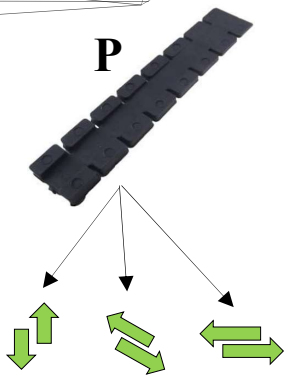

P