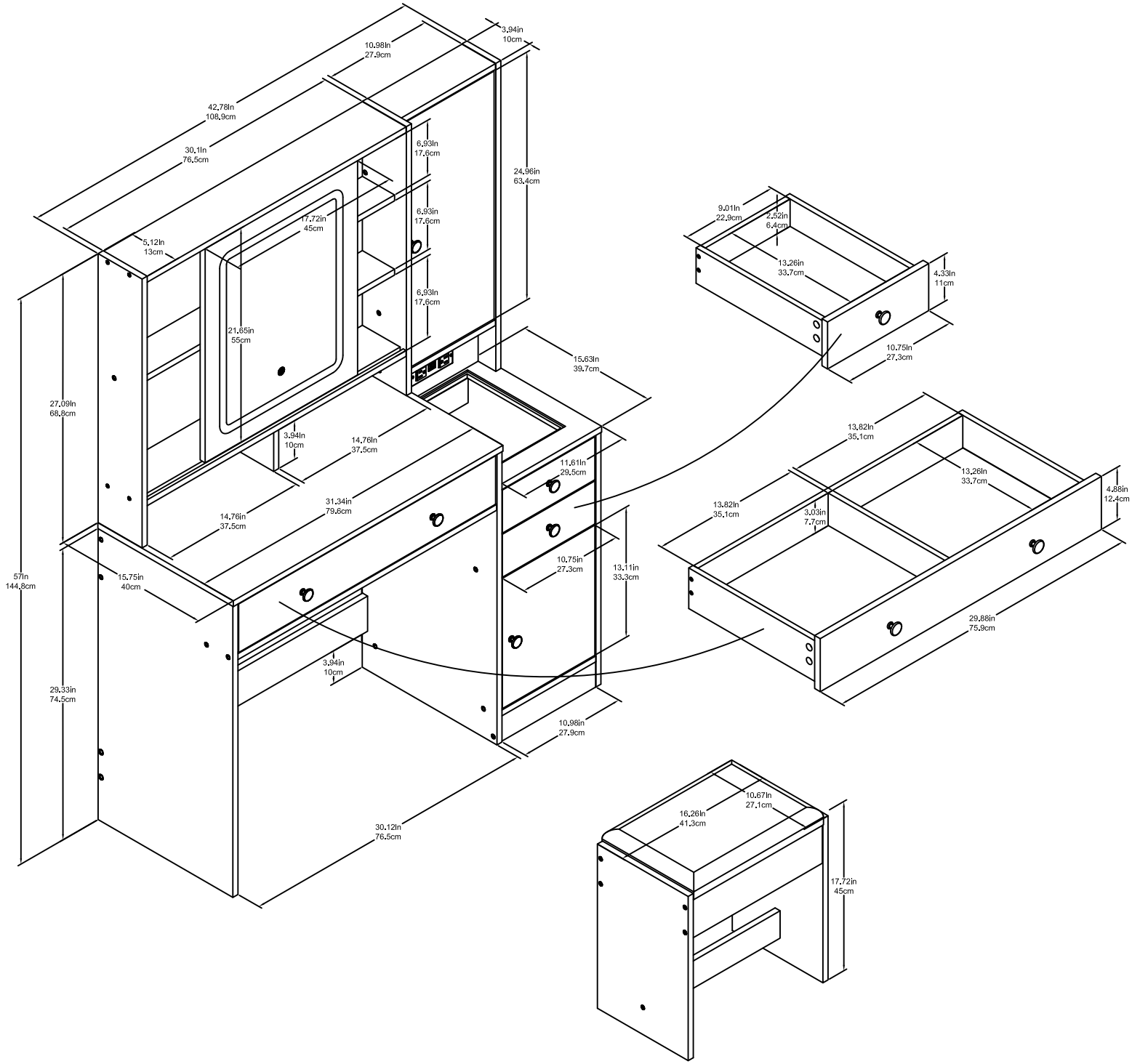
3.94in
10cm
10.98in
27.9cm
42.78in
108.9cm
30.1in
76.5cm
6.93in
17.6cm
24.96in
63.4cm
6.93in
17.6cm
17.72in
45cm
5.12in
13cm
6.93in
17.6cm
21.65in
55cm
15.63in
39.7cm
27.09in
68.8cm
3.94in
10cm
14.76in
37.5cm
11.61in
29.5cm
31.34in
79.6cm
14.76in
37.5cm
57in
144.8cm
15.75in
40cm
10.75in
27.3cm
13.11in
33.3cm
3.94in
10cm
29.33in
74.5cm
10.98in
27.9cm
30.12in
76.5cm
9.01in
22.9cm
2.52in
6.4cm
13.26in
33.7cm
4.33in
11cm
10.75in
27.3cm
13.82in
35.1cm
13.26in
33.7cm
4.88in
12.4cm
13.82in
35.1cm
3.03in
7.7cm
29.88in
75.9cm
10.67in
27.1cm
16.26in
41.3cm
17.72in
45cm