ASSEMBLY INSTRUCTION

"Why Our Furniture Comes in Smaller, Easy-to-Assemble Packages"

We believe that thoughtful packaging and design are essential to providing quality furniture that's better for the environment and easier on your wallet. That's why our products are shipped in fully knock-down, space-efficient packaging. This approach reduces the carbon footprint of transportation, minimizes packaging waste, and ultimately allows us to pass on significant savings to you. Additionally, our flat-packed designs make it simple to move and assemble your new furniture at home, saving you time and costly delivery fees. With a little consumer effort, you'll enjoy great furniture at a lower cost while making a greener choice for the planet. Take your time, follow the instructions, and enjoy watching your vision come to life–piece by piece."

We believe you will absolutely love your new furniture. Please immediately examine this product carefully. Any request for missing part or damage replacement must be received within 90 days of your receipt of the product. For some reason you want to return the product, please contact us directly before you decide to return your product to the retailer. Our Customer Service team can answer most concerns and can assist you with any questions you may have about your new product.

Have these ready when you email:

- **Item Number**
- **PO #**
- **Purchaser Name**
- **Proof of Purchase**
- **Description of the problem and/or the Part Number needed**

Replacements for missing or damaged parts or hardware are normally shipped within 3 to 5 business days and we thank you for your patient.

The item must be returned in good condition, in the original box, with all original proof of purchase, parts and accessories, within the time frame specified by the retailer it was purchased from.

90-Day Limited Warranty Statement for Manufacturing Defects

Please read this Limited Warranty carefully. To maintain your Warranty, you will need to comply with the conditions stated here.
This warranty is for manufacturing defects only and does not cover damages as a result of misuse.

1. Our products sold comply with the description contained in this Warranty. All parts and products are warranted 90-Day from the original date of delivery except: parts and products used for commercial, contract, rental trade, institutional, or any other non-residential purposes; parts and products that have not been maintained in accordance with the care recommendations provided; parts and products damaged resulting from the consumer's improper assembly; or parts and products that are damaged or defective due to normal wear and tear.

2. To exercise rights under this warranty, proper documentation, i.e., photography, purchase order number, manufacturer's bar code label, and or any other pertinent information upon request is required. We reserve the right to repair or replace the product within the warranty period based upon the documentation received as support of a claim for consideration. We will not replace or repair any product if improper maintenance, improper handling, or improper use caused the damage. Any product sold from or modified by a Non-Authorized Dealer, Seller or Consumer will void the Warranty.

3. Cost of packaging and shipping to and from us is not covered by the warranty unless expressly arranged by us. This warranty does not extend to furniture that has been exchanged or replaced by us as settlement of an original claim of defective merchandise. This warranty does not extend to furniture that has been moved from delivery location on original purchase order.

We appreciate your business!

ASSEMBLY INSTRUCTION

HARDWARES LIST

ITEM	DESCRIPTION	DRAWING	QTY
A	MINIFIX CAM LOCK	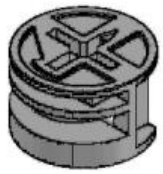	44 PCS
B	MINIFIX CAM BOLT		44 PCS
C	WOOD DOWEL (M6 x 25MM)	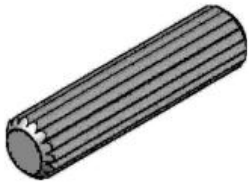	48 PCS
D	WOOD DOWEL (M8 x 25MM)		4 PCS
E	TRUSS M SCREW (16MM)	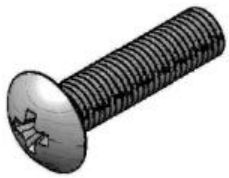	8 PCS
F	HANDLE	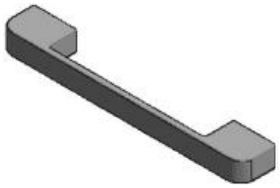	4 PCS
G	6/8" NAIL		22 PCS
H	PLASTIC STRIP (H SHAPE)		1 PC
I	FLAT WASHER M6 x 19MM	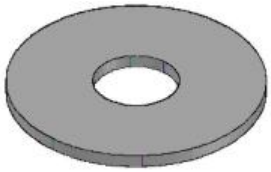	4 PCS

ASSEMBLY INSTRUCTION

HARDWARES LIST

ITEM	DESCRIPTION	DRAWING	QTY
J	SPRING WASHER M6 x 13MM	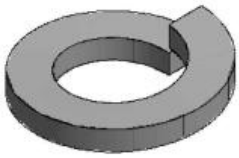	4 PCS
K	M4 ALLEN KEY (65MM)	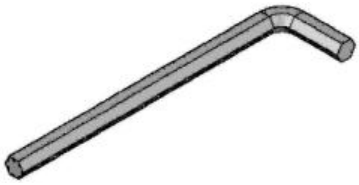	1 PC
L	JCBC SCREW M6 x 55MM		4 PCS
M	TIPPING RESTRAINT		1 PC
N	CSK SCREW M4 x 45MM		1 PC

ASSEMBLY INSTRUCTION

PARTS LIST

ITEM	DESCRIPTION	DRAWING	QTY
C1	TOP PANEL	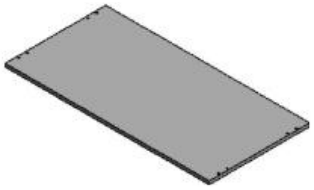	1 PC
C2	LEFT PANEL	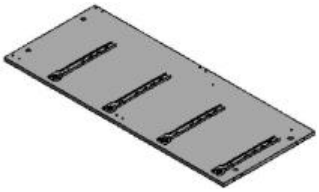	1 PC
C3	RIGHT PANEL		1 PC
C4	SUPPORT RAIL	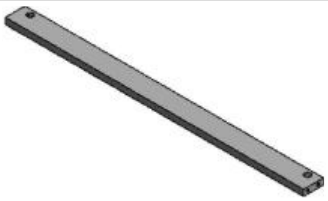	4 PCS
C7	BACK PANEL	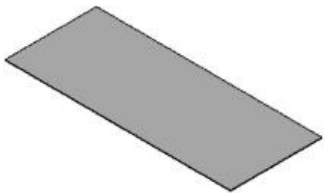	2 PCS
C8	DRAWER HEAD	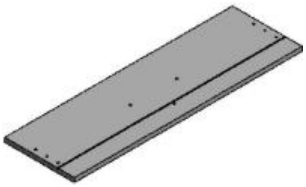	4 PCS
C9	DRAWER BACK PANEL	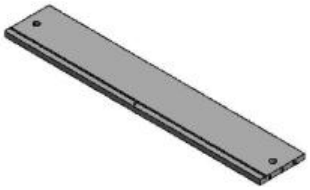	4 PCS
C10	DRAWER BOTTOM PANEL	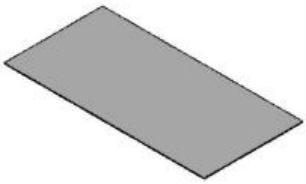	4 PCS
C11	BOTTOM PANEL		1 PC

ASSEMBLY INSTRUCTION

PARTS LIST

ITEM	DESCRIPTION	DRAWING	QTY
C12	FRONT TIPPING PANEL		1 PC
C13	BACK TIPPING PANEL	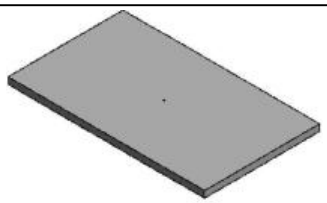	1 PC
19	DRAWER LEFT PANEL		4 PCS
20	DRAWER RIGHT PANEL		4 PCS
21	DRAWER BOTTOM SUPPORT RAIL	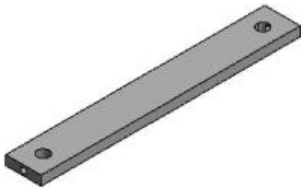	4 PCS
22	WOODEN LEG	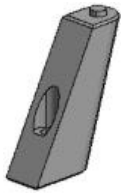	4 PCS

*Note: All parts needed are shown in above picture.
Numbers only indicate the specific parts for easy assembly.

ASSEMBLY TOOLS REQUIRED

1. Screwdriver (not provide)

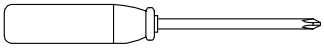

2. Hammer (not provide)

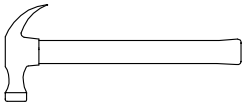

3.Skip the power trip this time.

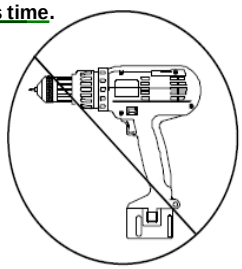

THINGS TO REMEMBER FOR ASSEMBLY
CHOSES À SE SOUVENIR POUR UNE ASSEMBLEE
COSAS PARA RECORDAR EN UNA ASAMBLEA

MINIFIX BOLT
BOULON MINIFIX
PERNO MINIFIX

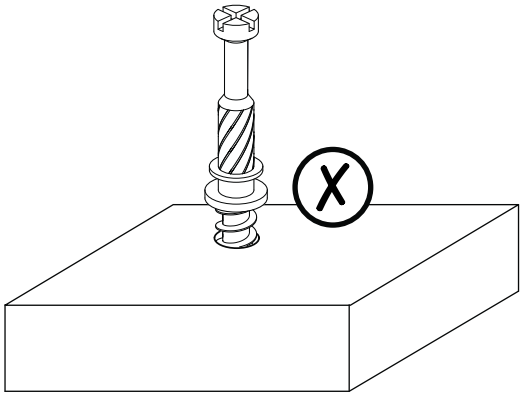

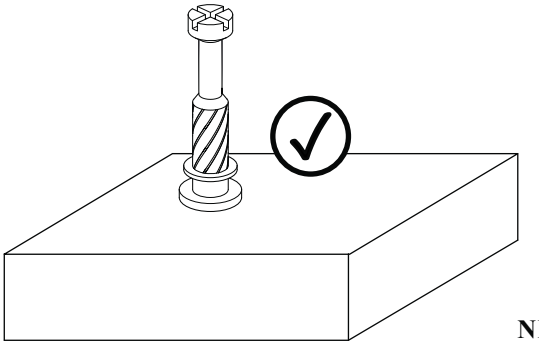

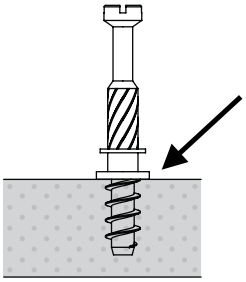

NO GAP
PAS D'ÉCART
NINGÚN ESPACIO

MINIFIX CAM
CAMÉRA MINIFIX
CÁMARA MINIFIX

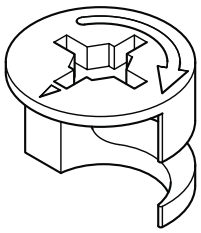

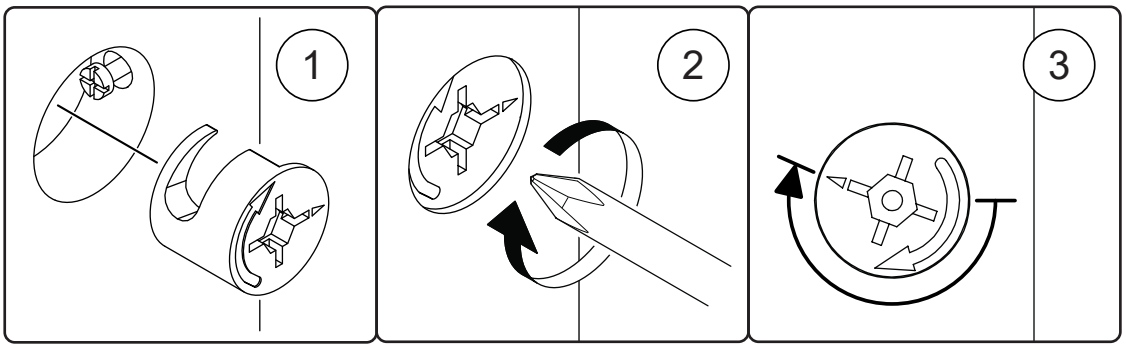

WOOD DOWEL
CHEVILLE BOIS
PASADOR DE MADERA

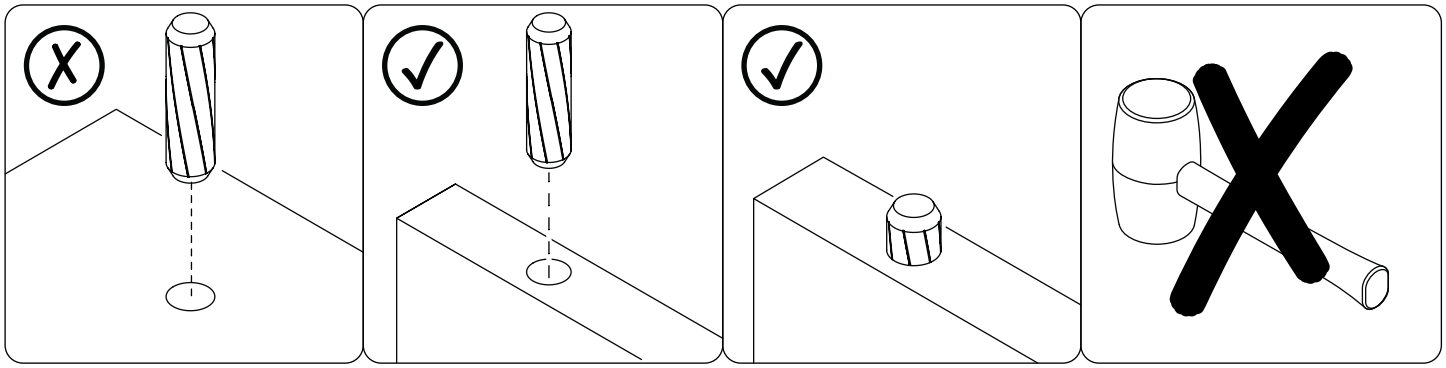

ASSEMBLY INSTRUCTION

STEP 1

NOTE : - The outer board is for protection of packaging only, not part of furniture. Please throw it before assembly.

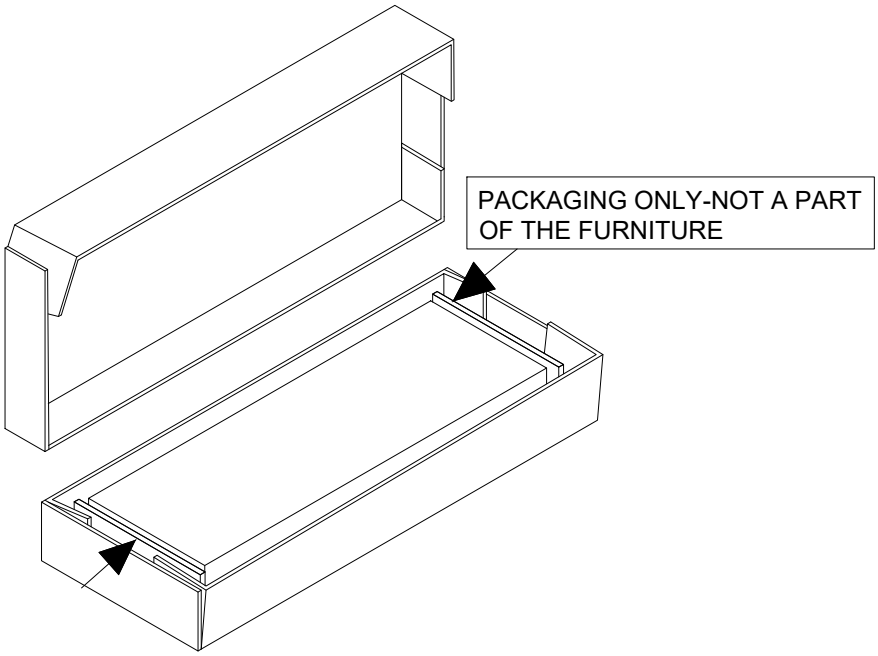

STEP 2

NOTE : - Sticker C11 should facing downward.

B x 4	D x 4	I x 4	J x 4	L x 4

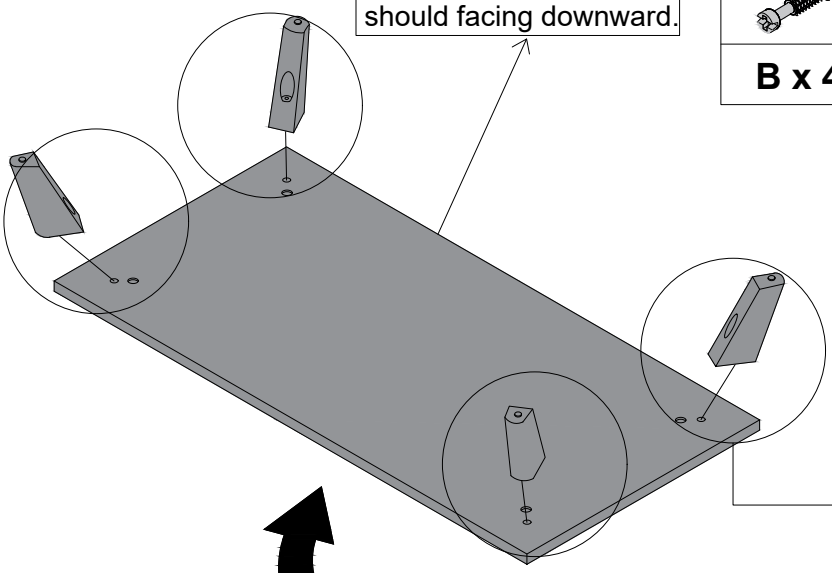

STEP 2.1

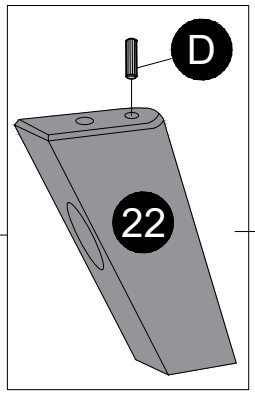

STEP 2.2

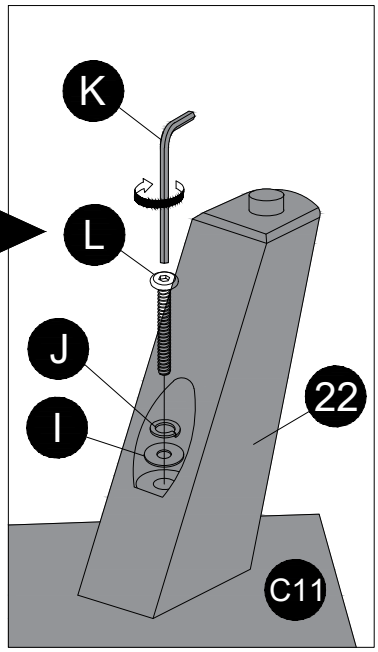

TURN AROUND

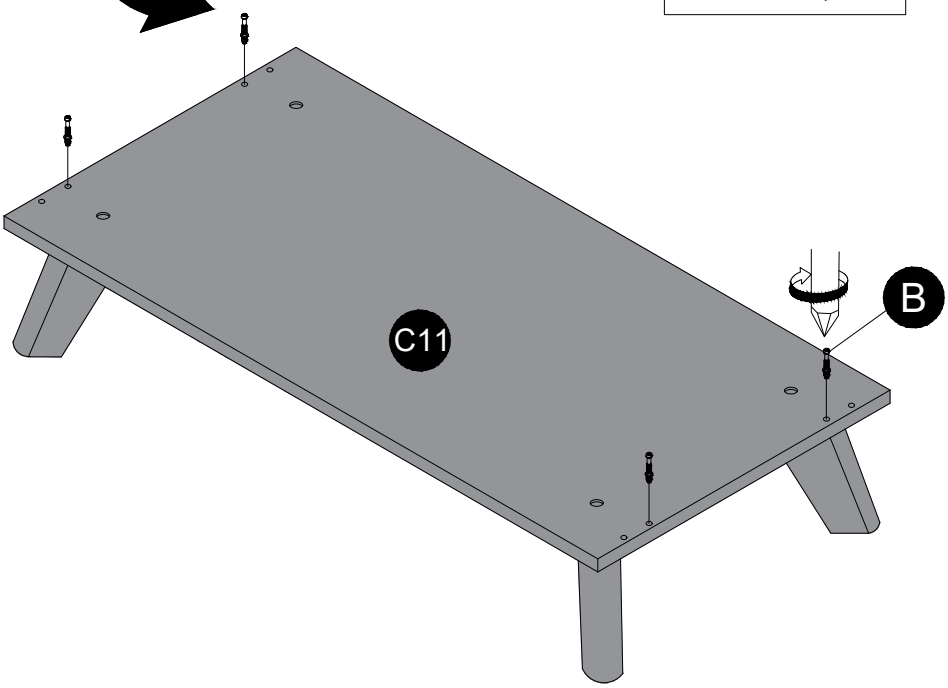

ASSEMBLY INSTRUCTION

STEP 3

B x 4

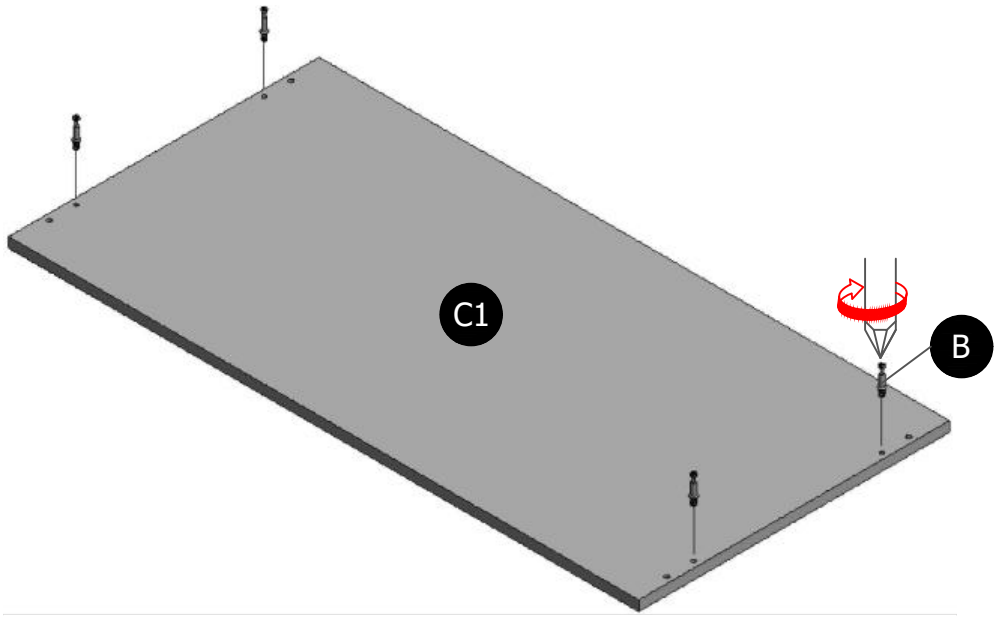

STEP 4

NOTE : - Make sure arrows on each (A) point towards nearest edge with hole.

A x 4	B x 6	C x 4

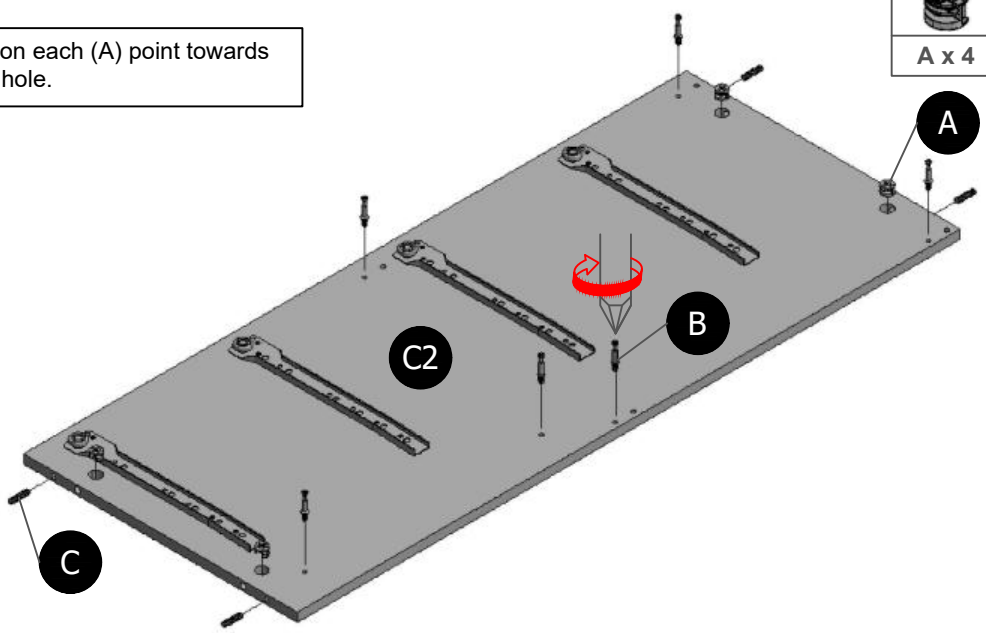

STEP 5

NOTE : - Make sure arrows on each (A) point towards nearest edge with hole.

A x 4	B x 6	C x 4

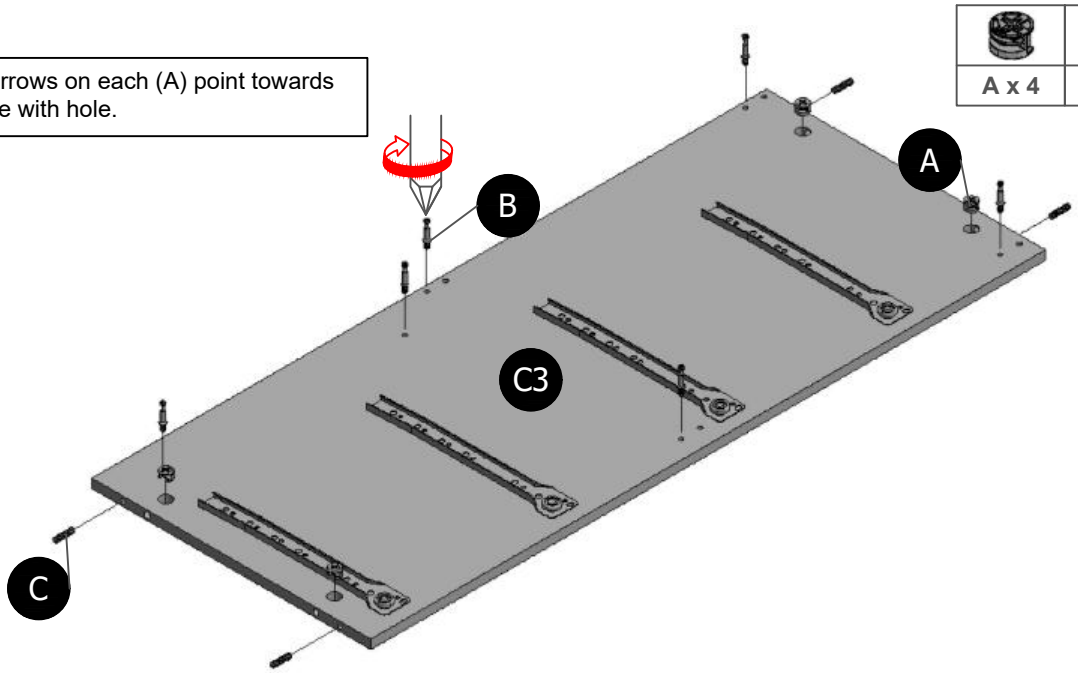

ASSEMBLY INSTRUCTION

STEP 6

A x 8	C x 8

NOTE : - Make sure arrows on each (A) point towards nearest edge with hole.

x 4

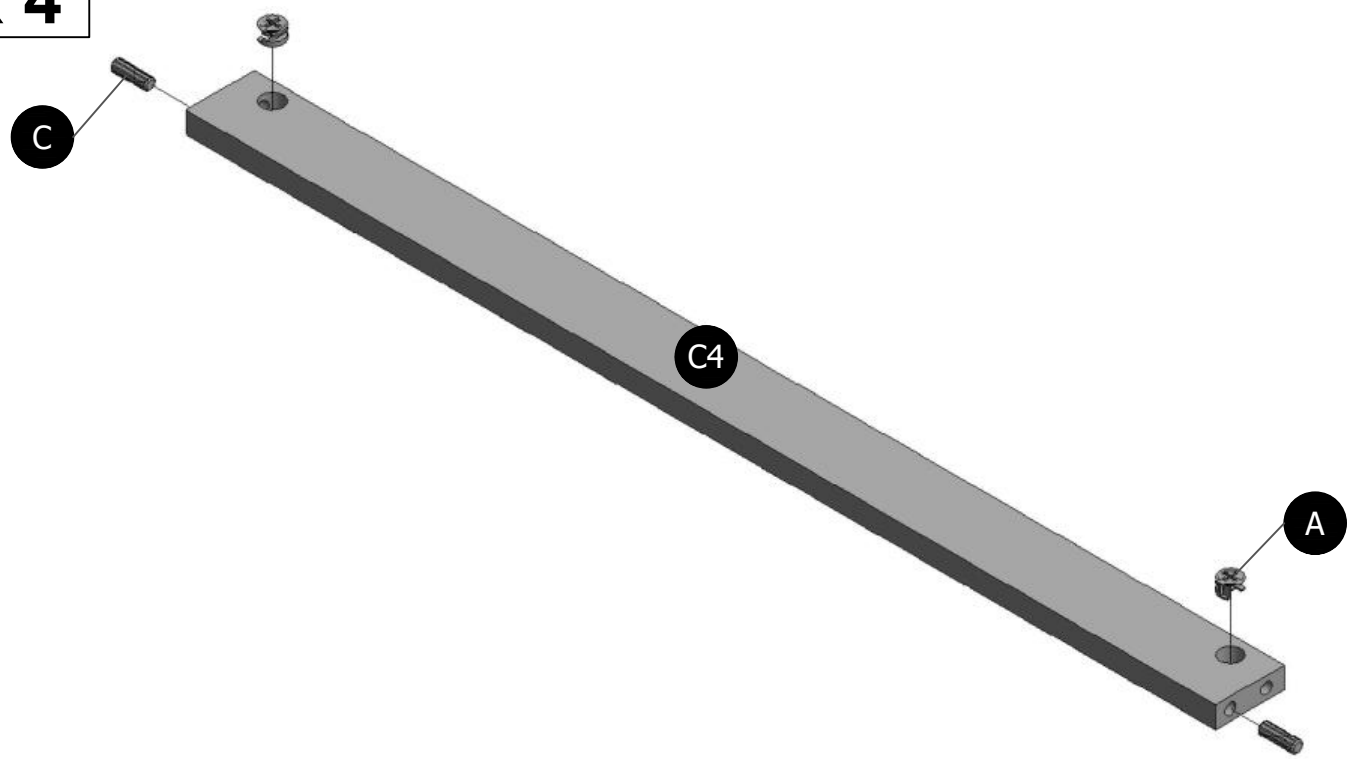

STEP 7

A x 4

NOTE : - Make sure arrows on each (A) point towards nearest edge with hole.

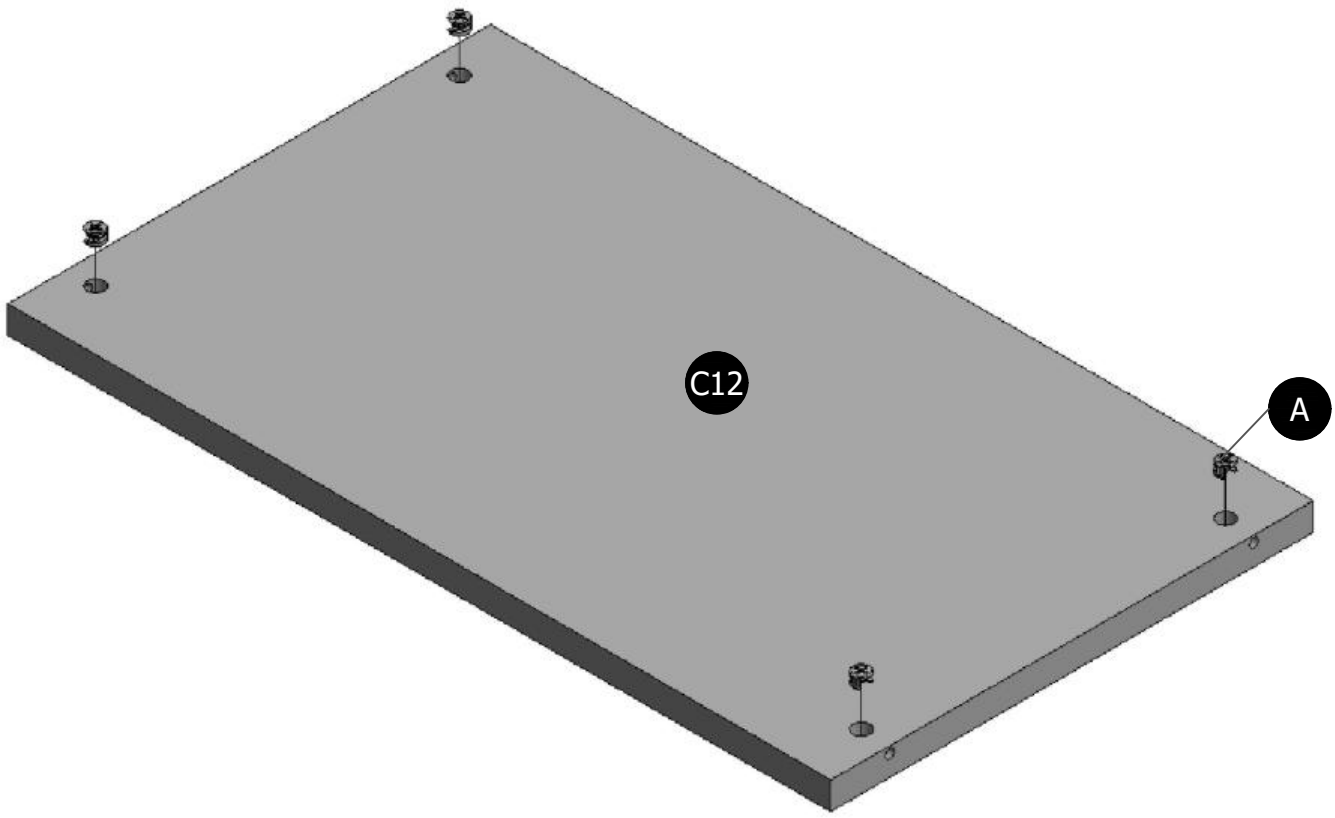

STEP 8

C12 board is used for ASTM at the back of products only

IMPORTANT : - When assembly C12, do NOT apply force or move C4 and C2. Hold them in position until C4 is fully inserted and secured.

Reminder : - Holding the parts during assembly.

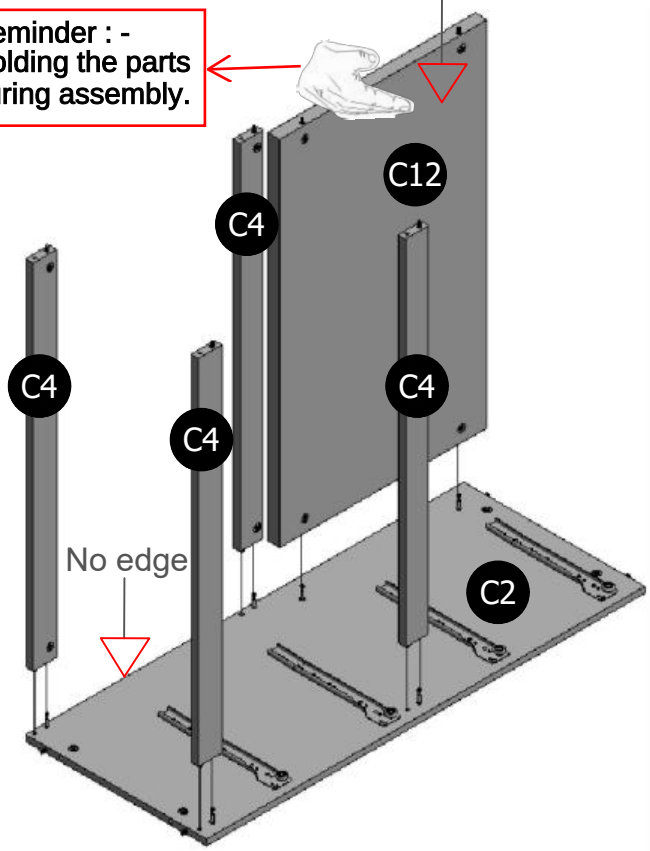

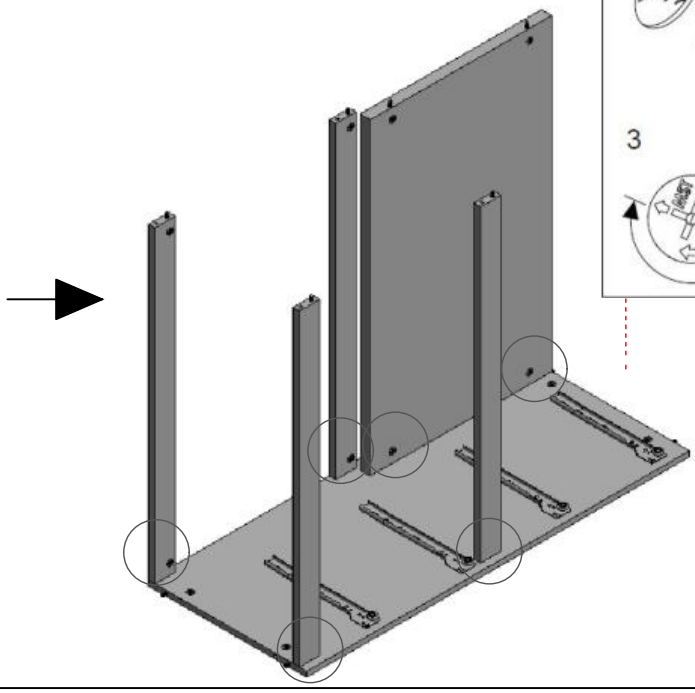

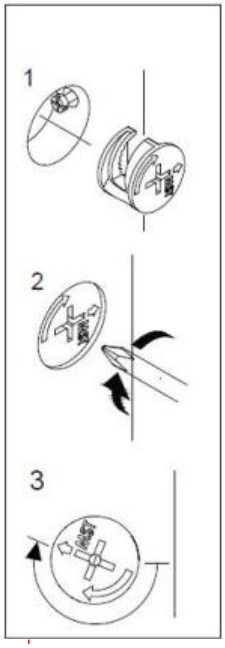

STEP 9

IMPORTANT : - When installing C3,do NOT force or move C4 and C12. Keep both parts aligned until C3 is fully secured.

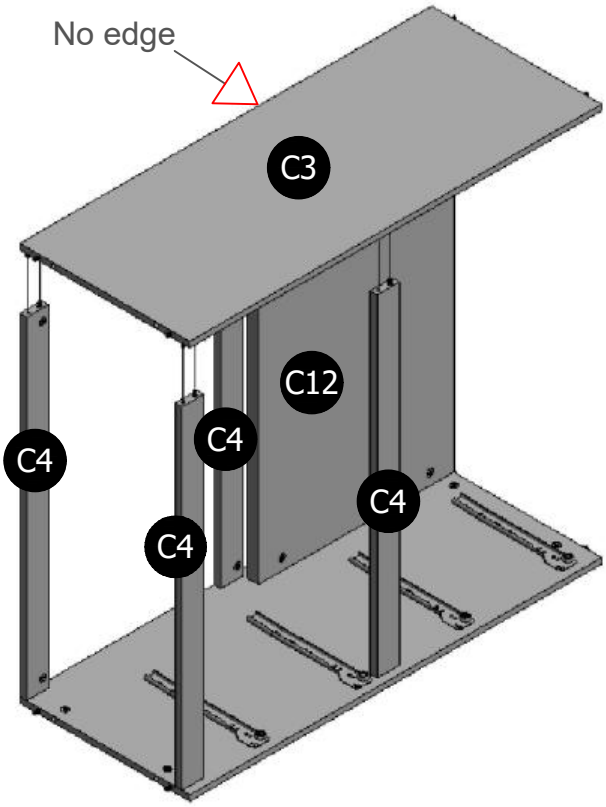

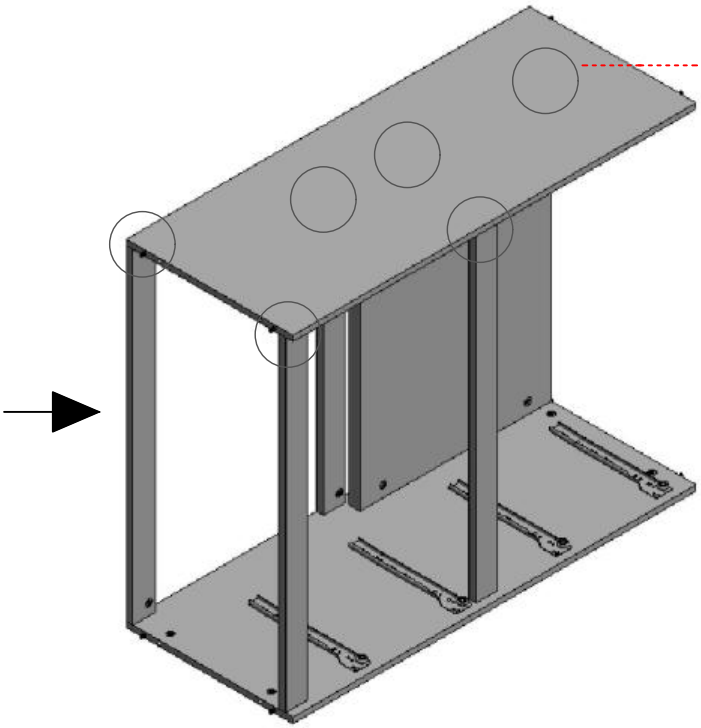

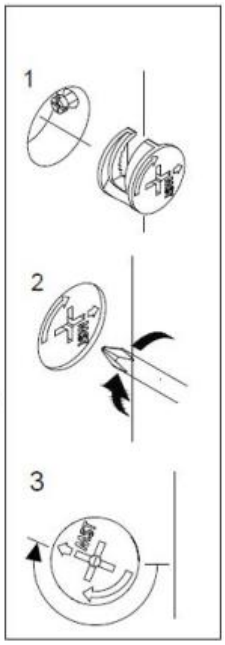

STEP 10

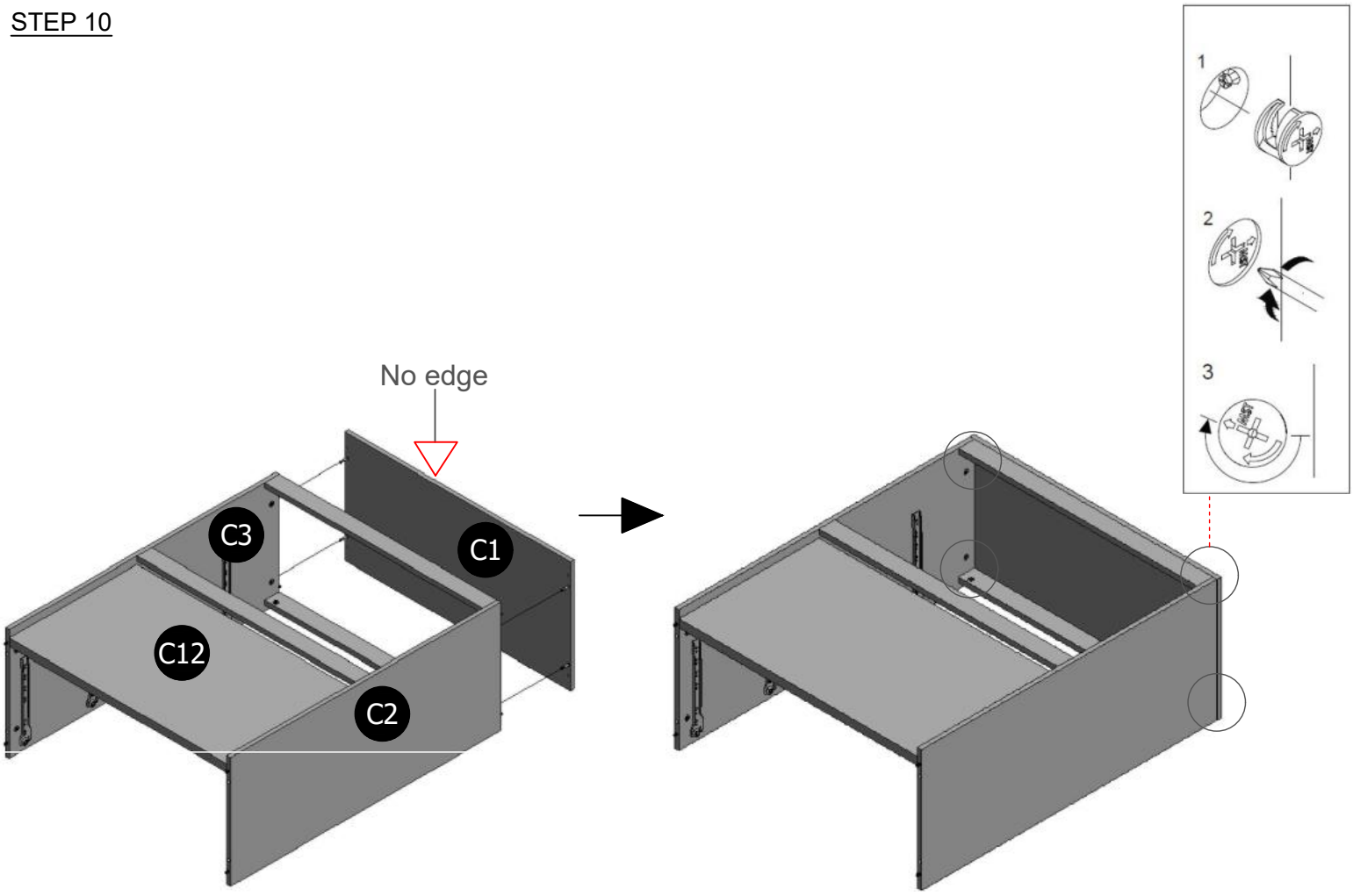

STEP 11

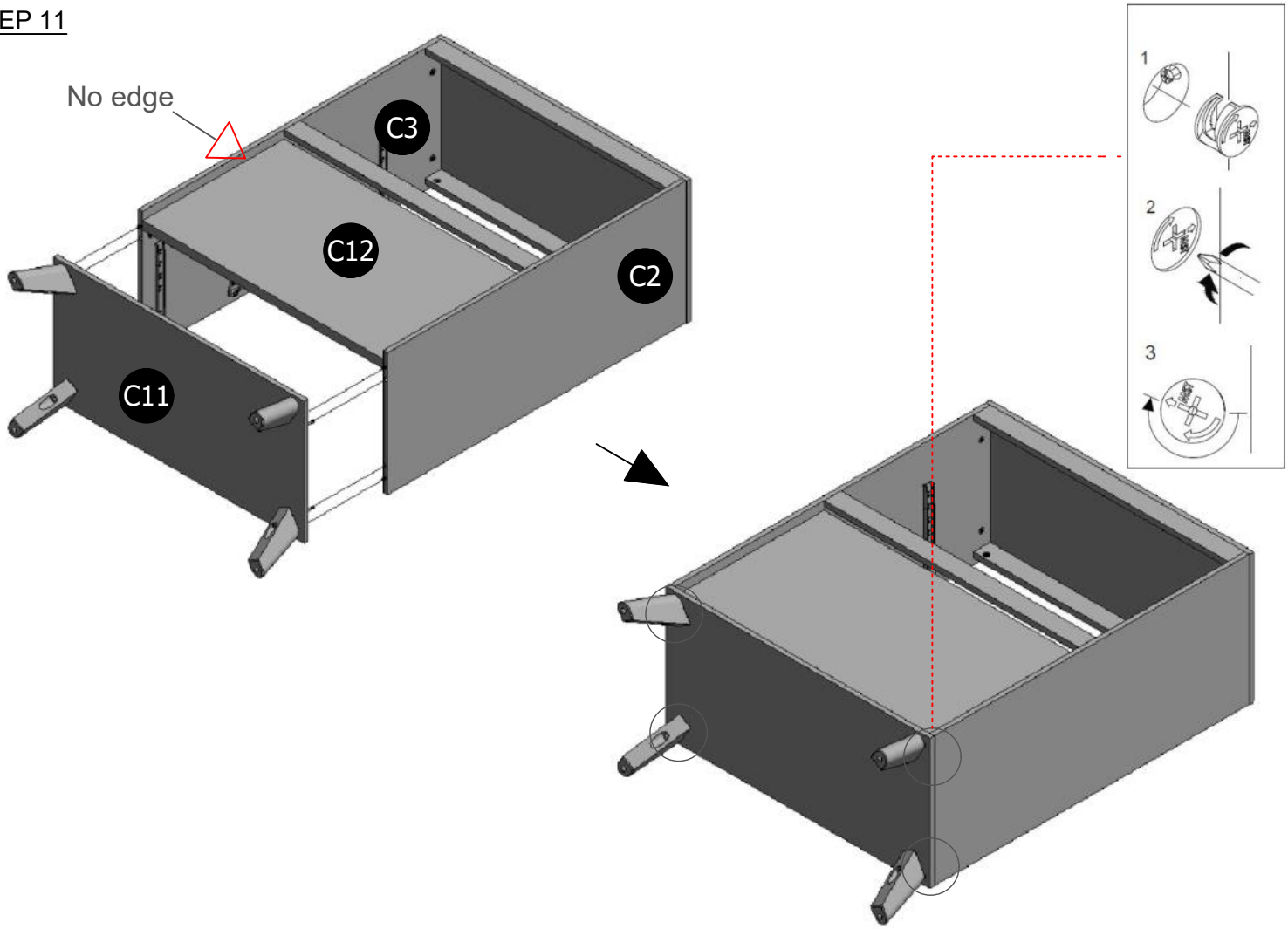

ASSEMBLY INSTRUCTION

STEP 12

C13 board is used for ASTM at the back of products only

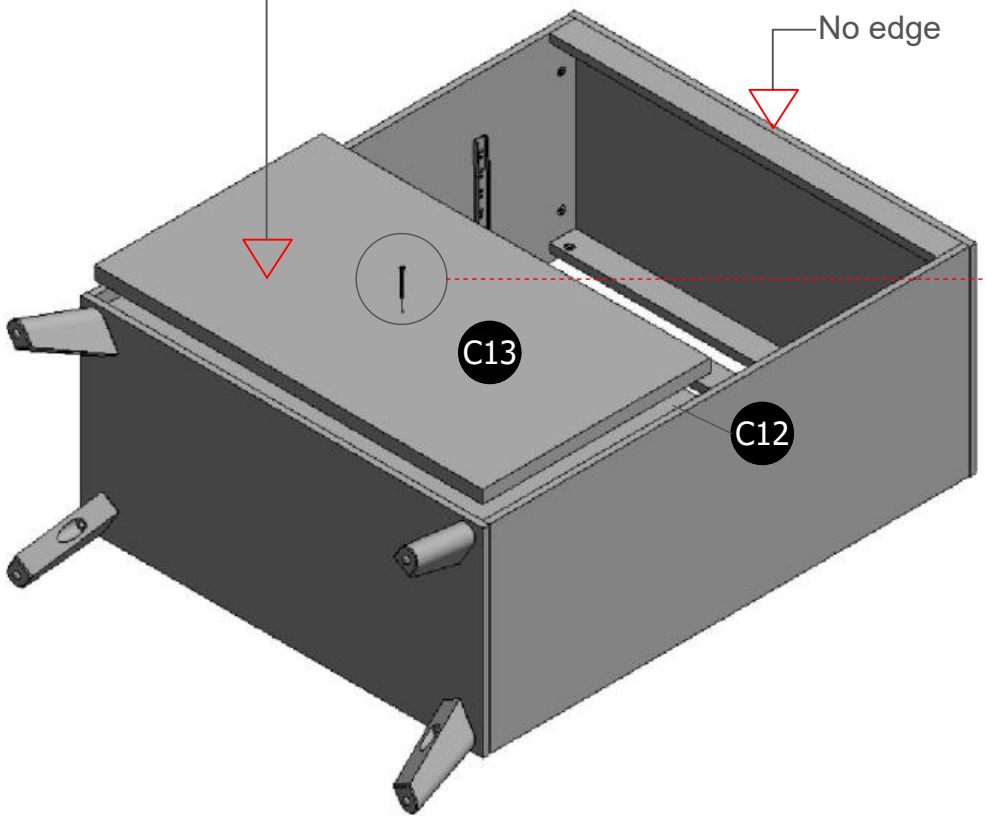

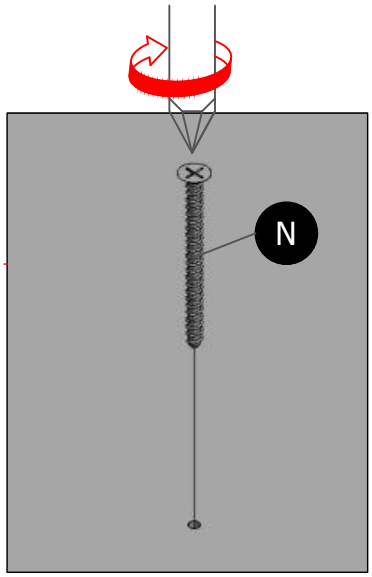

STEP 13

Side with color paper must be the same.

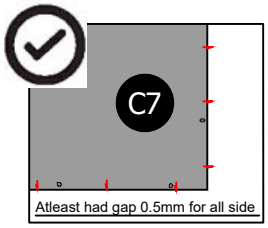

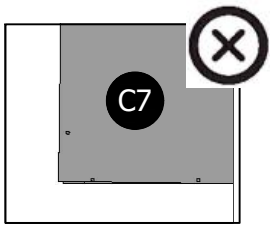

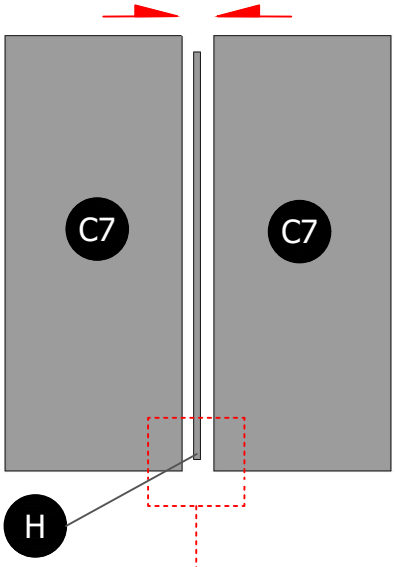

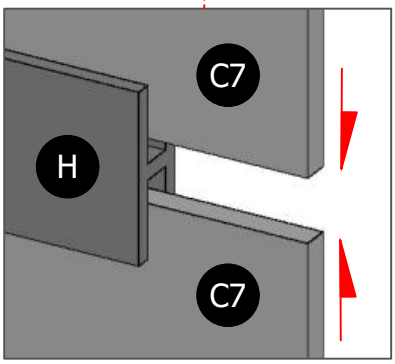

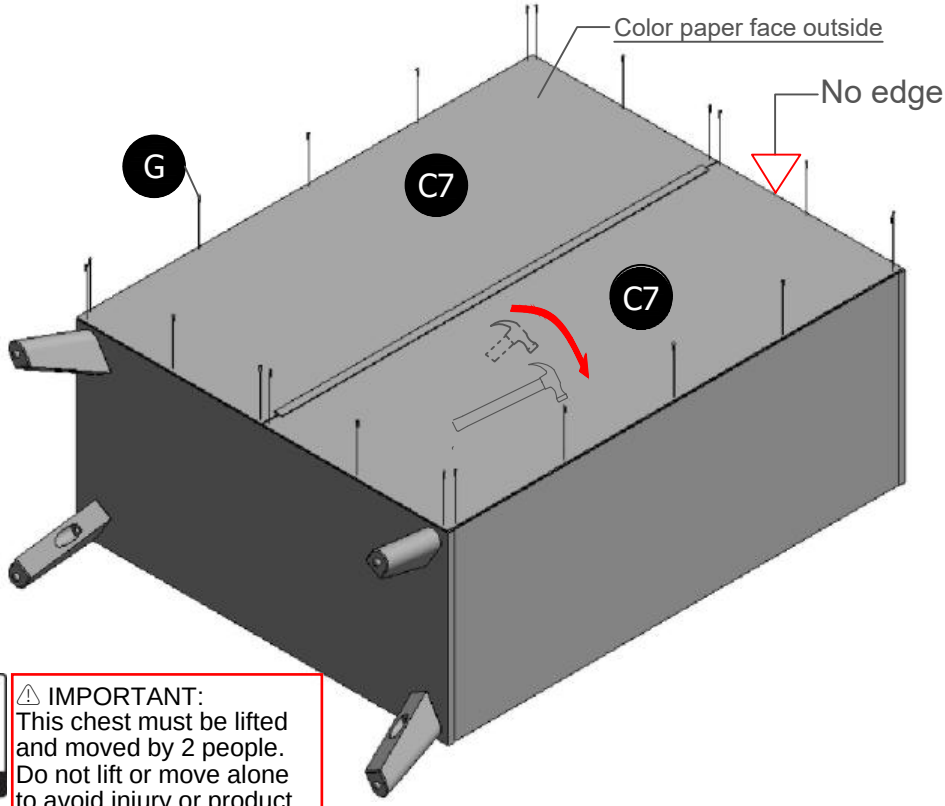

⚠ IMPORTANT:
This chest must be lifted and moved by 2 people. Do not lift or move alone to avoid injury or product damage.

STEP 14

x 4

B x 12

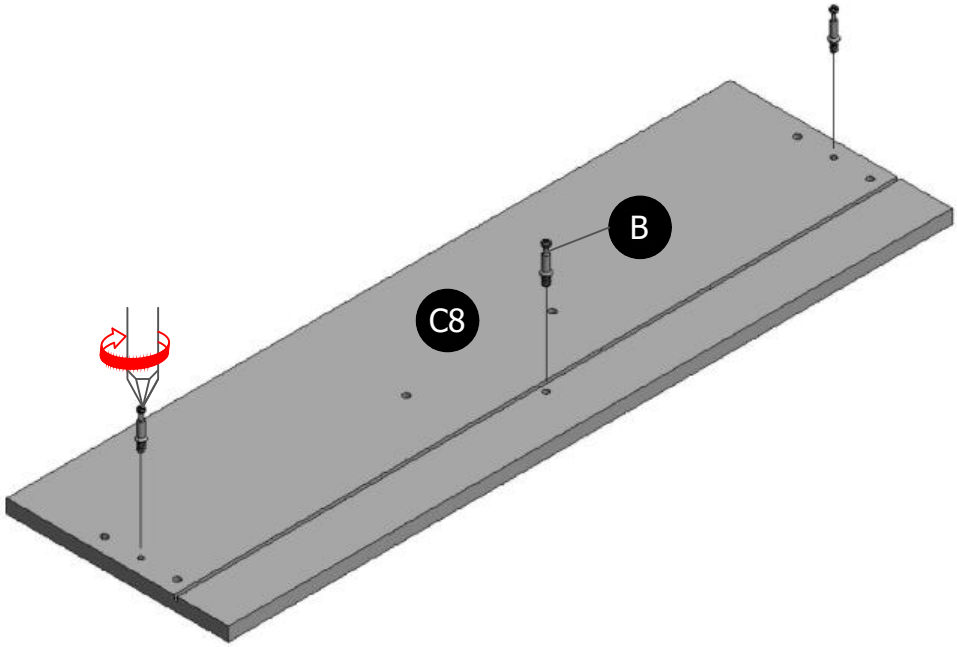

STEP 15

NOTE : - Make sure arrows on each (A) point towards nearest edge with hole.

x 4

A x 8	B x 4	C x 16

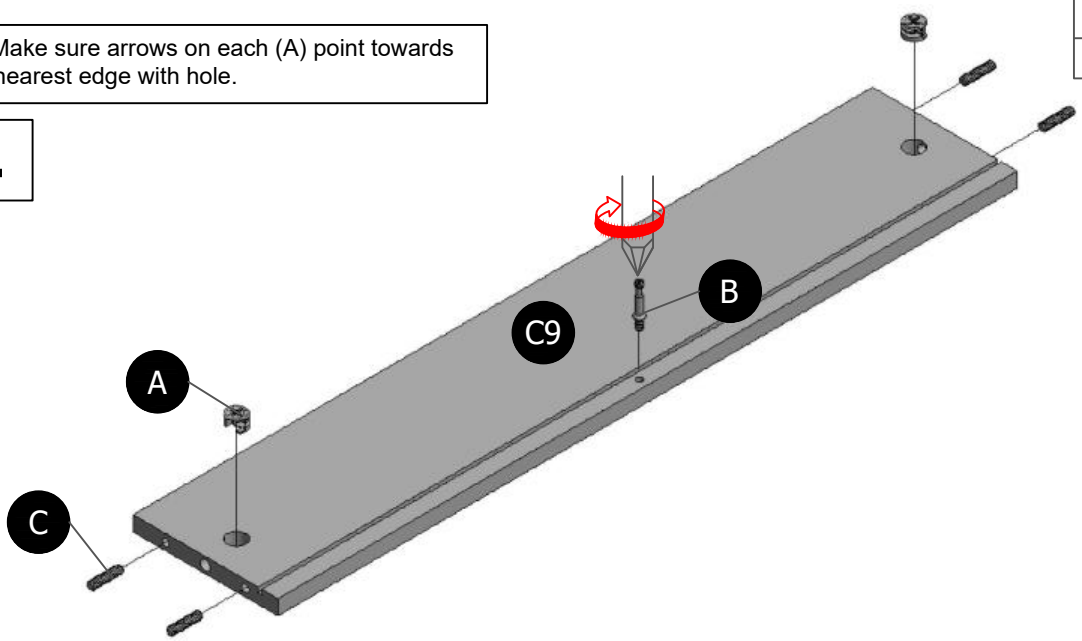

STEP 16

NOTE : - Make sure arrows on each (A) point towards nearest edge with hole.

x 4

A x 4	B x 4	C x 8

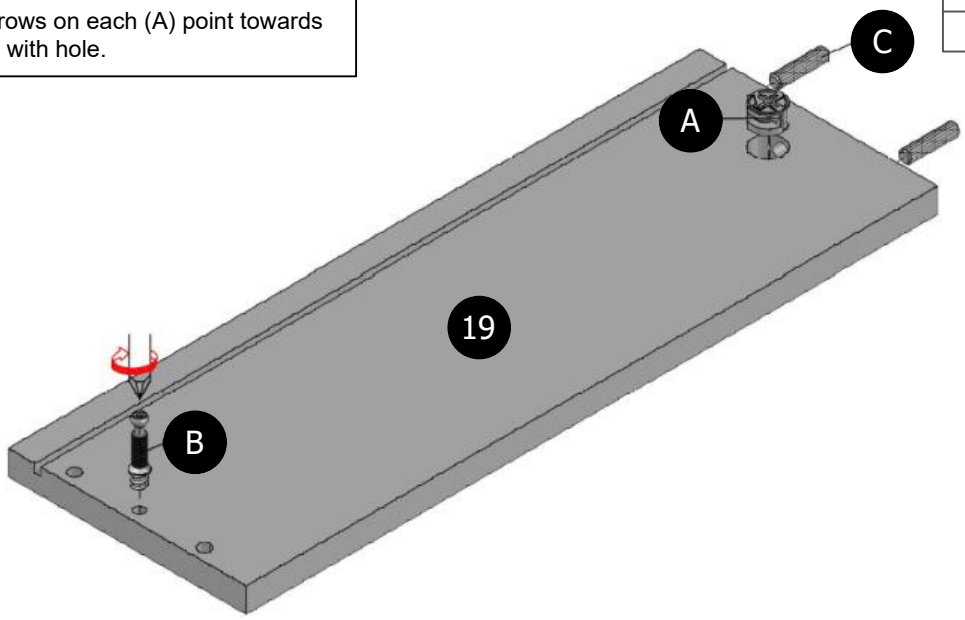

ASSEMBLY INSTRUCTION

STEP 17

NOTE : - Make sure arrows on each (A) point towards nearest edge with hole.

x 4

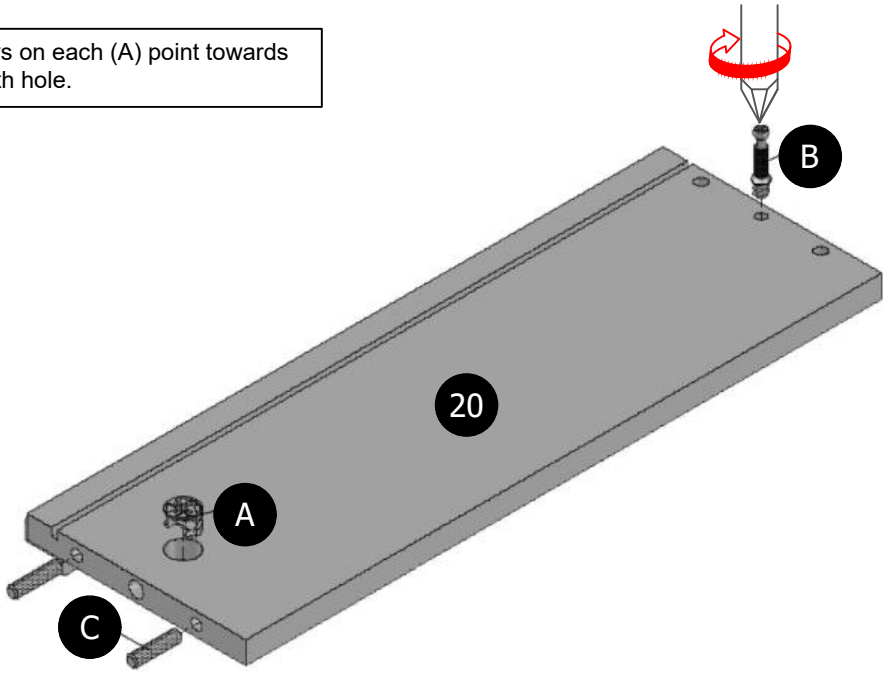

STEP 18

NOTE : - Make sure arrows on each (A) point towards nearest edge with hole.

x 4

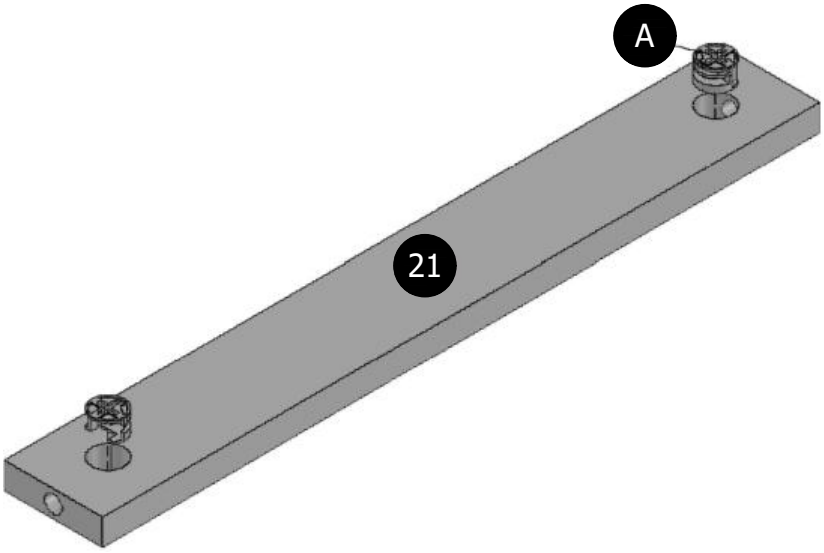

STEP 19

x 4

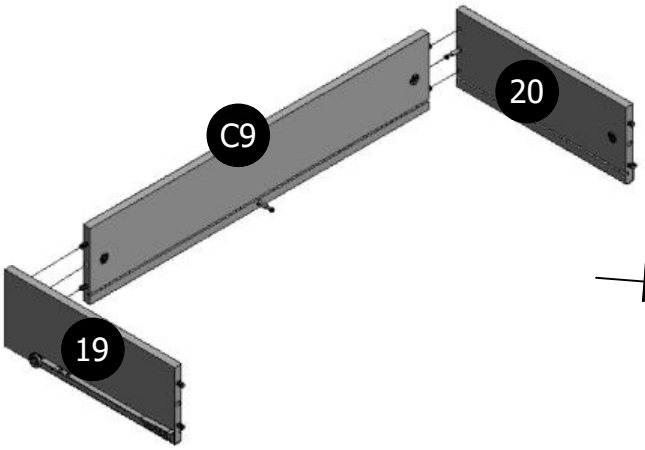

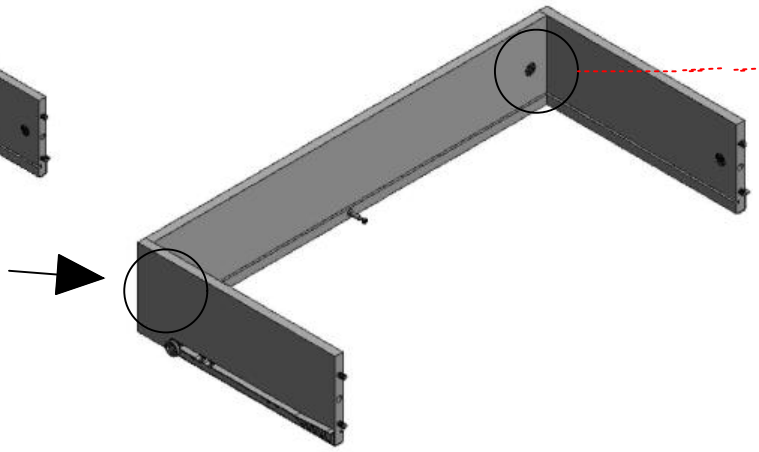

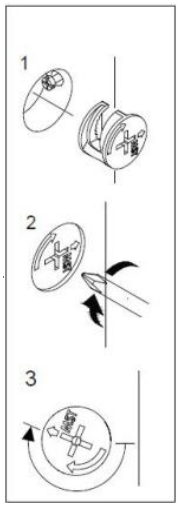

ASSEMBLY INSTRUCTION

STEP 20

x 4

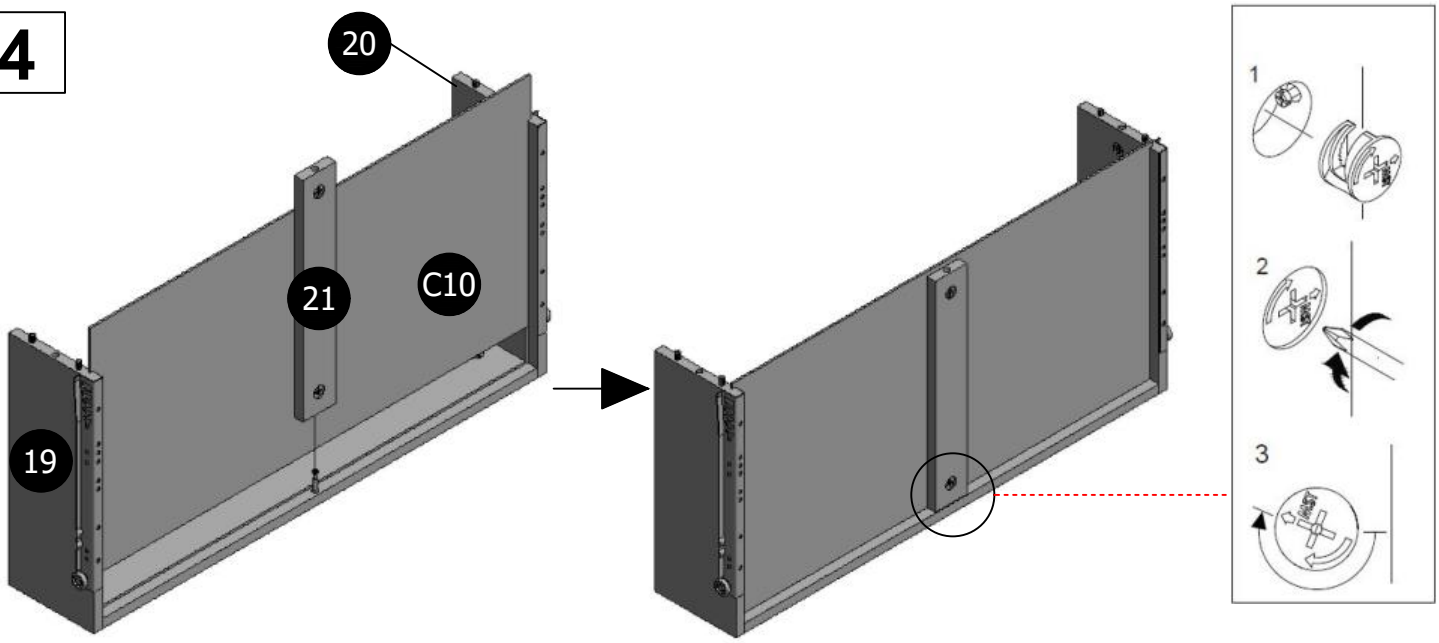

STEP 21

x 4

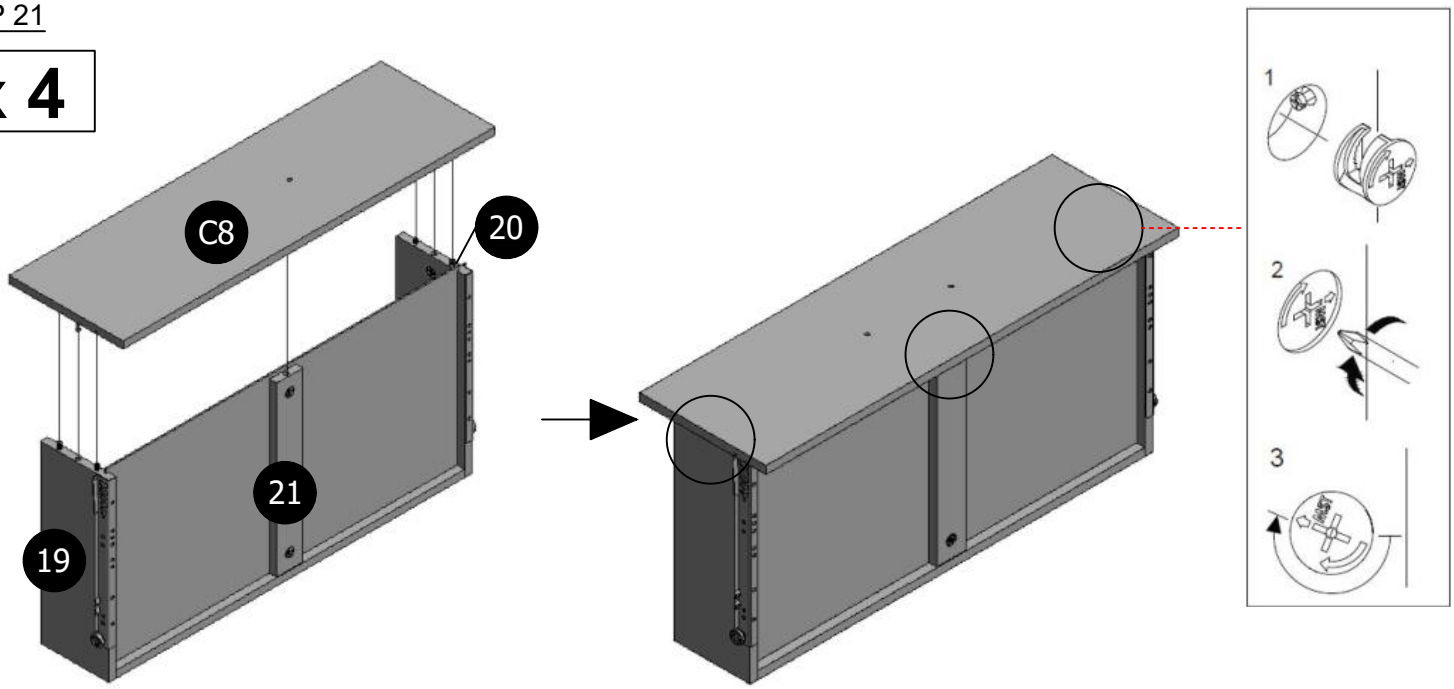

STEP 22

x 4

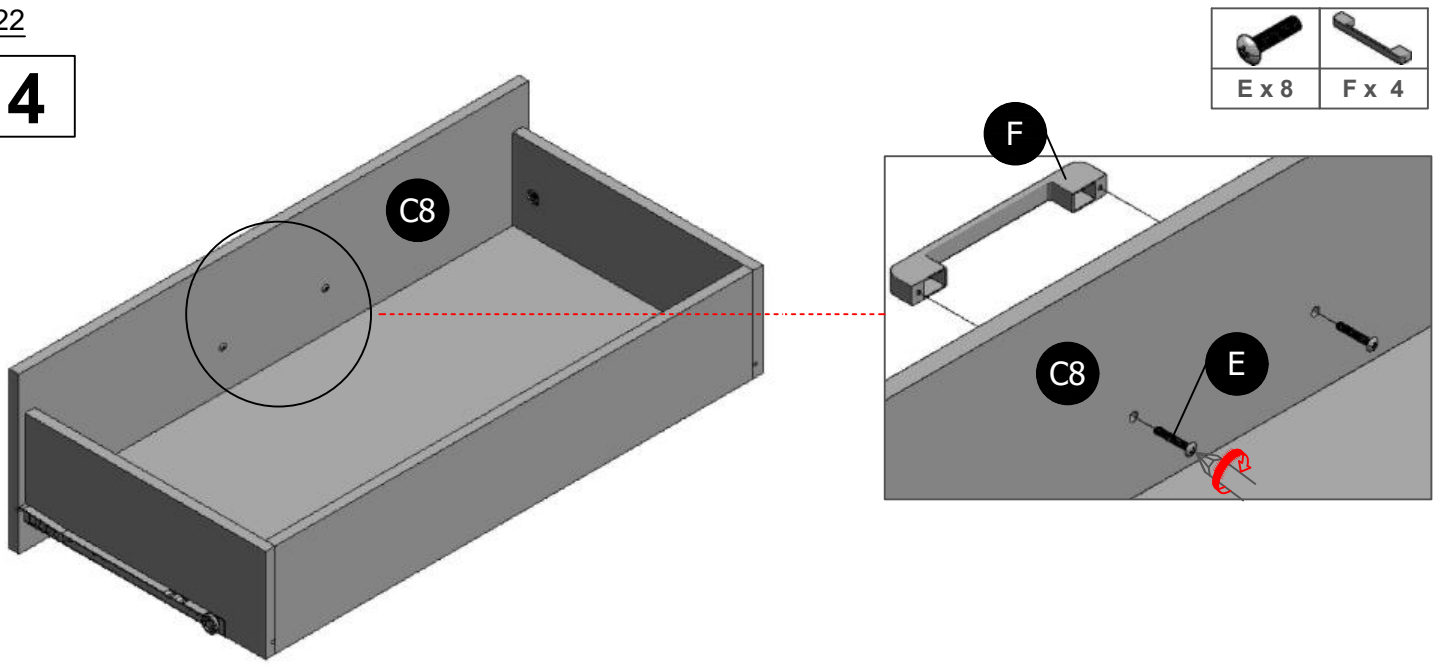

ASSEMBLY INSTRUCTION

STEP 23

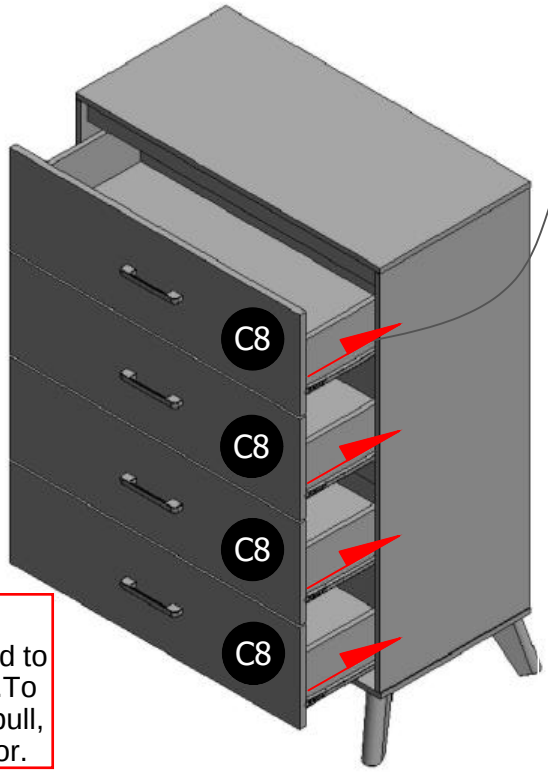

One of (20) with sticker
place it to the top of right side.

IMPORTANT : - Make sure two people move the chest if needed to avoid injury or product damage.To avoid damaging,do NOT push,pull, or drag the chest across the floor.

STEP 24

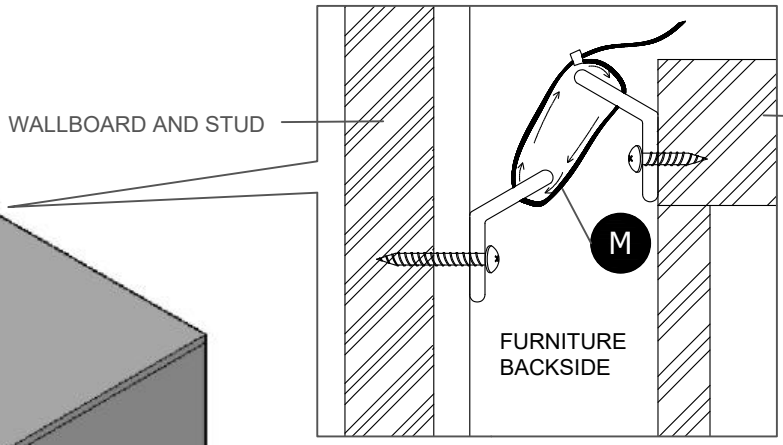

ASSEMBLY COMPLETED